# THE ART OF FOXHOLE

## Table of Contents


Foreword.....page 03
Major updates.....page 04
Early Lore and World Development.....page 26
Early Faction Development.....page 30
Early Visual Development.....page 34
Logistics Concepts.....page 43
World Development.....page 49
Town Revamp.....page 60
Trenches and Bunkers.....page 84
Emplacements.....page 92
Facilities.....page 101
Vehicles.....page 125
World Set Pieces.....page 199
Field Guns.....page 203
Uniforms.....page 212
Firearms..... page 223
Trains.....page 241
Naval.....page 250
Airborne.....page 289
Storytelling.....page 306


The notes throughout this book show the thought process behind the designs, but these don't always reflect the eventual implementation or final game design. - Julian

# Foreword

## Matt

One of my core adult memories is an all-hands meeting at Siege Camp (then, Clapfoot) around the time we shipped Fortified. We were a much smaller team then; the handful of us gathered in a small offset compartment of our downtown Toronto office where, every Friday, we had been doing game pitch presentations to round out the week. It had been our ritual for a few months. This time, however, the bosses had an announcement.

Prototyping for "Project War" would begin.

It was described broadly as an ambitious massively multiplayer World War II game with a focus on supply lines. And it was unlike anything any of us had worked on before. It was unlike anything I'd seen on the market. They had a very thorough game design vision and reasons why this was the direction they wanted to take the studio going forward. It was a very exciting time.

On a personal level, I never wanted to work on games about war. I am vehemently anti-war and against the glorification of war in popular culture. The way it's often depicted in media is shallow, disappointing, or straight-up propaganda. I wasn't sure if this was going to be a project I wanted to invest so much of my career in. At the time, I had been responsible for adding in narrative details for our games, so I was confronted with the prospect of writing about war (though I had no idea what the future had in store for me there, hah!). I spoke with Mark very early on and expressed these concerns.

I was adamant that I did not want Foxhole to gloss over the complexities of war. It was very important to me that the world and any stories we told centred on the people affected by war. That discussion of "war heroes" is nuanced. That political leaders are far-away figures, invisible hands playing with human lives like they're toy soldiers. That propaganda is rampant, and no one source can be trusted. That there are no "good guys" or "bad guys."

Turns out, Mark was on the same page from day one, and I had no reason for concern. A decade later, and the rest is, as they say, history.

I'm supposed to put some other fun facts in here, right? Fun trivia: I first dropped the name Callahan on a whim. It was the first word I wrote for Foxhole, before we knew what the world would look like. I wrote "Callahan's Pass" to mark a spot on a paper sketch. Soon after came Deadlands. People on the team kept asking, "Who is Callahan?"

"Who is Callahan?" is perhaps the most important question in the development of Foxhole's world.

## Julian

By random coincidence, I got a message from a friend about an opening at a studio and applied to the job on my birthday. I didn't know what that application had in store for me.

When I joined the company, 'Project War' was already in development. Eighth or ninth on the team, depending on who you ask, I was hired when the company had hit the point where they knew they needed an actual concept artist. I was told it was going to be an online war game, that it was the dream project of the studio leads, and that they wanted to finally go for it.

The original outline I was given included that the project would be set in an alternate world in the era between World Wars One and Two. Not steampunk, not dieselpunk, but 'real world' plus or minus fifteen percent. As a fan of 'strange real' games, this was exciting. Additionally, they wanted the game to feel like you were part of a tabletop wargame or a single soldier in a diorama that's come to life. As a longtime wargames enthusiast, I knew I was in the right place at the right time.

Almost ten years later, Foxhole has grown beyond our greatest expectations.

With Foxhole, I have been given the opportunity to explore and develop an entire game world and to play a role in the creation of an original IP—a dream job for a concept artist. As a small team, for the first seven years I was the sole concept artist, a responsibility I didn't take lightly.

I have been given the chance to direct the art style and develop an illustrative look to the concept art, which is something I think adds to the lively quality of the final game. Illustration and creative design are passions. The work has been hard, and the deadlines fast, but the encouragement and trust placed on me have made the effort worth it.

With all this said, I think the greatest thing I can attribute to Foxhole is the development of a team. The company has grown with the game, and it has forged and tempered something strong in us. Foxhole has made a company that asks, what do we dare to try next? We fight like siblings over game choices and which directions to go, but there is a trust that everyone is doing what they know to be best for the project, which is an attribute rarer than you might think.

From sketches to technical illustrations to promotional art, I am honoured to share the body of artwork that has gone into this project.

## The Vision

The development of Foxhole has been a decade-long project for Siege Camp. It started out as a prototype consisting of one small map and several basic weapons, with less than a hundred active players, and has since grown into a sprawling persistent online world with more than fifty regions, over a hundred vehicles, a full-fledged logistics game with factory building and train networks, naval warfare, aircraft operations, and thousands of players logging in daily. We built Foxhole piece by piece over dozens of updates and as you'll see in the coming pages, every iteration has served to push the game toward its ultimate vision.

In some ways the process has always been simple. We established a few core goals at the start of the project and have just been moving towards them every single day over the years. We've been adamant that as many decisions as possible are driven by these creative goals, which is why we've tried to maintain a simple monetization model after all these years. On the other hand, the project has seen many ups and downs; many mistakes have been made, lessons were learned, and seemingly insurmountable challenges had to be overcome. Our ideas haven't always panned out, and numerous technical or creative barriers have stood in our way, but we've always had an unwavering commitment to innovation and continuous improvement. It's been a messy journey at times, but in a gaming industry that is content on safe bets and streamlined productions, we've found that messy is a fair cost to pay for a chance at making something new and interesting.

Foxhole hasn't succeeded because of any single person's idea, but rather through the talent and effort of an entire team at Siege Camp. While a few individuals from the studio have been visible from the outside, there have been many key contributors in the areas of art, design, programming, qa, liveops, and operations working tirelessly to keep Foxhole updated and online. Lastly, the project would have gone nowhere without a community of players caring every day. It's that care, passion, and feedback (even when harsh) that has served as the bedrock of Foxhole's development over the years.

567
41
32
204
309
244
875
23
562
92

Foxhole launched initially as a free pre-alpha game on Steam. This first version of the game had a single region (Deadlands), rifles, pistols, grenades, and a few buildable structures. For the first few months after launch, the game had very few active players. In fact, to get the scale of players required to have a semblance of a war, we had to schedule the servers to come online at a specific time on Saturday mornings, when the most amount of users would be available. These scheduled events were called weekly wars, which were what drove the development of Foxhole during this time. Every week, the team would iterate on the build by fixing bugs and adding in a new feature or two. Then we'd roll out a new build on Friday just in time for the next weekly war to begin. At some point in the process, trucks were added for delivering basic supplies, the crate system was introduced, half-tracks were released, and a few new maps were added for variety.

At this stage, wars barely lasted more than a day, and there was no sense of a long-term conflict. About half a year into pre-alpha, we decided that we needed to take the next step towards the vision of a large-scale persistent war. This led to our first attempt at World Conquest, the game mode that would allow the war to span multiple regions and take place over days if not weeks. This early prototype ended up in failure, filled with many bugs and instabilities. The player base at the time, accustomed to simpler single-region weekly wars, did not have a good experience, so we took World Conquest offline and returned to the simpler Skirmish mode format previously used.

Just shy of a year after the launch of the pre-alpha, we had to take Foxhole into Early Access on Steam. Since we couldn't get World Conquest working, we settled for launching the game with only Skirmish mode. The game's initial release took off on Steam a lot more than our estimations, which bought us some time to figure out how to turn the game's short-lived Skirmish mode matches into long-term persistent wars. Since our initial attempt at World Conquest seemed out of reach at the time, we went for a simpler approach called Campaign mode. Campaign mode worked like a meta game on top of the actual game, where all the regions were displayed like a board game, and regions were taken in a turn-based fashion. To take over a region, players would engage in a Skirmish mode match, and the winner of that would claim the region. Only one Skirmish mode match could be active at a time. Once a faction claimed all the regions in this manner, they would win the war.

After we returned from the holiday break that year, the realization came to us that Campaign mode vastly fell short of the vision, and we had to make World Conquest work at all costs. We revived the World Conquest prototype we developed before Early Access and spent several months fixing up the critical issues. We relaunched it in the spring of that year, and while it still had all sorts of design and technical issues, it had enough of a foundation to build on. We ended up keeping Skirmish mode in some capacity for some time, but eventually World Conquest became the main and only game mode for Foxhole.

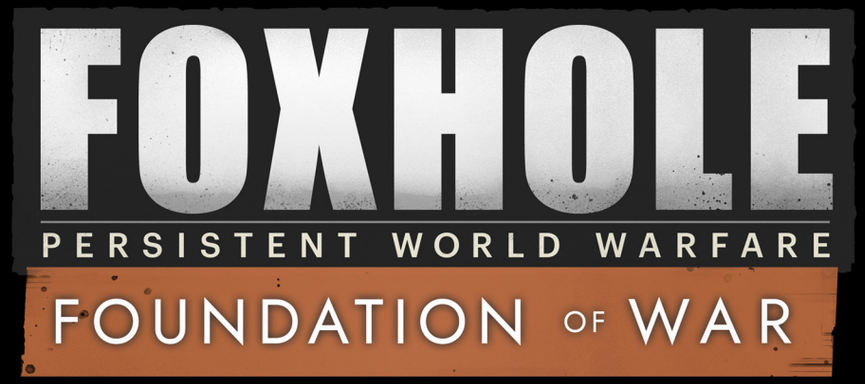


Foundation of War can be considered the first major update for Foxhole, especially after World Conquest mode was introduced to the game.

The central focus of this update was to rebuild town environments from the ground up. Previously, these environments consisted of several basic houses from the initial prototype that were grouped together to portray an approximation of a town. The goal for the revamp was to make them feel more like full-fledged urban environments that a battle can take place in. We wanted buildings to have interiors for close quarters combat and houses to collapse into ruined structures that can still provide cover. We wanted an occupying force to use abandoned buildings to fortify during a siege by firing out of windows or setting up a mortar emplacement on the roof of a dilapidated house.

To help us visualize how the new towns would look, we took screenshots from the old town areas and painted new environments over them. This helped artists and game designers get on the same page as to how the new towns should look and feel to play in. The next step was to create a prototype of these new environments using grey box models. We tested the prototype with a small group of community testers, which helped us shake down the design into a working implementation. There were some more ambitious ideas attempted in this prototype, such as multi-floor houses and bridges between houses that were ultimately cut in the final version.

This update also introduced two “endgame” pieces of content. First was the introduction of battle tanks. For context, light tanks were the only tank class at the time, and there were no armour mechanics or subsystems. They were among the first vehicles that we wanted to push the cooperation element as far as we could given the tools we had. To that end, we introduced the engineer seat, which was responsible for repairing the tank when damaged during combat. The second feature was the ballistic rocket sites. This was the first superweapon we were introducing to Foxhole, and we wanted them to have the capability to permanently wipe out entire towns in the world. Given how important even a single town was at the time, this was a risky decision, but we were hopeful that this would lead to some fun high-stakes situations. We were also adamant that this feature should require a high level of player collaboration, so we designed a mechanic where a forward spotter had to relay launch codes back to an operator back at the rocket site. This feature eventually led to some very interesting player stories, including the Jade Cove Crisis, an event that lives on in Foxhole history even after all these years.

War Machine was probably one of the most important updates in the history of the project and was also one of the riskiest. It was an inflection point that transformed many core parts of the game and created the foundation that Foxhole would be built on for many years to come.

We did a complete overhaul of World Conquest, making it feel more like one continuous unified world. Previously, regions were created as stand alone maps for Skirmish mode. Travel connections were made between them to create the feeling of travelling from one area of a larger world to another, but the experience felt more like moving through a portal to another place rather than stepping across a boundary in the same world. In the overhaul, the regions were completely redesigned to fit seamlessly with each other. When a player got close to the edge of a region, the neighbouring region's landscape would be streamed in and rendered so players could see what's on the other side of the boundary. As part of this process, we converted the shape of the regions from square to hexagon to allow more dynamic movement of armies across the world. Another important change was made to make the world feel more cohesive. Instead of the map screen having two modes—one that displayed a fixed far-out view of all the regions and another that displayed a close view of only the local region—it was unified into a single continuous view that could be zoomed in and out dynamically using the mouse wheel.

At this point in the project, we knew that the logistics game was insufficient to support the long-term vision we had for this central part of Foxhole. Our aspiration was to eventually have an in-depth logistics chain driven completely by players. We wanted player-built factories, train networks, shipping lanes, and more. We knew that there was no way the current logistics game could support this kind of depth. We had some tough decisions to make that would bring short-term pain for the project but would lay the necessary groundwork for future success.

The first big change was removing Port Bases from the game. At the time, these were safe zones where logistics players could produce equipment and vehicles. They were similar to safe zones in other MMOs, where enemies can't enter without being destroyed. This bothered us greatly, as we wanted Foxhole to be as organic and player-driven as possible. It was one of the scariest design changes we've ever had to make. Until this point, the Port Bases were the safety net that made World Conquest work, and removing them threatened to break the entire game. There were a lot of difficult design problems to navigate with this change, but, in the end, it allowed us to replace them with the logistics towns in Foxhole today, which are no longer safe zones and can be overtaken by the enemy.

Secondly, we moved from a relatively simple economy with a basic gather-and-produce loop to one with dynamic resource locations, mines, shipping containers, cranes, freighters, and more. All of these features went on to become the framework for Foxhole's logistics game today.

It's not a stretch to say that War Machine was a pivotal moment for the project, and had we not gone through the many challenges it presented, Foxhole may not have ever gone on to achieve its current scope and depth of content.

# FOXHOLE
## TRENCH WARFARE

After War Machine, we began working on what we internally called Project Hammer, which would bring the next foundational change to Foxhole: the transition to trench networks and bunkers as primary defensive structures in the game.

In the conceptual phase of Project Hammer, we referenced the Maginot Line from World War 2 as inspiration for what we wanted players to be able to build in the world. With this in mind, we wanted bunkers to have fully traversable interiors, engine rooms, and some semblance of a power system. We iterated to a design that included different tiers of trenches, a modular bunker system with built-in AI defences, and early support for superstructures in the form of the Storm Cannon.

Visually, we were heavily inspired by dioramas depicting trench warfare from the world wars. There was something about seeing the tiny model soldiers inside trenches from a bird's-eye view that reminded us of Foxhole. When iterating on the visuals for trenches and bunkers, we continuously referred back to such dioramas.

To implement trenches, we had to figure out how to modify the landscape at runtime. Since the Unreal Engine didn't support this feature, we had to implement a custom solution that would effectively cut holes into the landscape, allowing structures and players to exist beneath the ground. This was a very difficult problem to solve, both from the technical and content standpoints. Trench models had to fit into the holes precisely; otherwise, gaps would exist in the ground. The initial release introduced several bugs that would cause players to fall through the landscape. Eventually these issues were solved, and in later Early Access development we transitioned to a more robust implementation that relied on deforming the landscape instead of cutting holes, which ended up being a better long-term solution.

# FOXHOLE
## ARMS RACE

There was one more big foundational change that needed to be done after Trench Warfare, and that was to make each faction feel distinct from one another. One of the core goals of Foxhole was to make the setting feel like it could have existed in some sort of alternate real-world history. In the world wars that Foxhole is inspired by, the combatants had distinct technologies, advantages, and disadvantages, and this was something we wanted to bring to the game.

To achieve this goal, we revamped the vehicle system to support variants, which were modified versions of existing vehicles in the game. For example, some trucks got weapon mounts, some scout vehicles got additional seats, and tanks got fitted with different types of armaments. These variants were intended to give each faction more flavour and distinguish them from each other based on their lore.

In the process of creating variants, other features were added to vehicles. A new physically accurate driving model was implemented from the ground up so vehicle movement behaved much more realistically. Prior to this, every vehicle in the game would move like tanks (i.e., pivot at their centre) and didn't have proper inertia, drifting, and handling physics. Vehicle subsystems were added so fuel tanks could be ruptured or tank treads could be destroyed.

This update added other key features you see in the game today, such as seaports, coastal guns, emplacements, industrial districts in towns, and more.

War Machine, Trench Warfare, and Arms Race were an exciting yet tumultuous time for the project. They heavily disrupted the gameplay that many players had become accustomed to during the earlier phases of development, which understandably caused a degree of frustration in the community. Many risky and difficult decisions were made throughout these updates, but each set the stage for Foxhole for years to come.

# FOXHOLE
## WINTER ARMY

Winter Army was a very fun update to work on. With the big foundational changes behind us, we were finally able to focus back on building exciting new content and gameplay features. While the prior three major updates felt like performing open heart surgery on Foxhole, Winter Army felt like we were able to fly again in terms of development.

A reimagined artillery system was added in Winter Army and quickly became one of our favourite features in the game. Previously, artillery in Foxhole behaved more like long-range anti-structure weapons that could “snipe” bases from far away with relative ease and with little teamwork. We instead wanted artillery to bombard larger areas, wearing down an enemy position, and for it to be more of an active event that many players on both sides could be a part of.

To enable this, we added what we internally called the devastation system that would slowly transform the landscape and environment as it was shelled. This was a very challenging technical problem for a game like Foxhole, where every dynamic change must be replicated over the network without overwhelming the server. We developed an efficient system for doing this by dividing the world into a grid on the server and storing compressed information about how devastated each part of the environment was. On the content side, the artists had to painstakingly create new, devastated versions of every single garrison house in the game that looked dilapidated and ruined.

We also wanted the experience of artillery to be engaging for both sides. For the attackers, we wanted to push into the cooperative goal for Foxhole and make it an activity that required many players performing different actions: running artillery shells, spotting, loading, and firing. For those on the receiving end, we wanted it to feel as immersive as possible. One big reference we looked to was the episode “Bastogne” from the television show Band of Brothers, which depicted an Allied company surviving a prolonged artillery attack during the Battle of the Bulge. It was important to us that artillery fire had a distinguishable sound to telegraph an incoming shot, both to create a frightening atmosphere and so players had time to run for cover.

This update was also the genesis of the weather system in Foxhole. The weather events proved to be quite a technical challenge. Small details like having snow and rain not appear in the interior of buildings required novel solutions. Having rivers and lakes freeze over introduced many edge cases and required map designers to update all the bodies of water in the game.

We also finally added a dedicated clan system, which came in the form of the Regiment feature in the game today.

# FOXHOLE ENTRENCHED

The overall goal of Entrenched was to revisit parts of the game that we felt needed refinement before moving out of the Early Access on Steam. The theme of the update was trenches and building, but this update ended up including a variety pack of features that expanded upon different parts of the game.

The biggest changes centred around improving the trench and bunker system introduced back in Trench Warfare. Trenches and bunkers could now be further customized with stairs, sandbags, barbed wire, and numerous other modifications. It was always important to us that tanks could eventually drive over trenches, which was finally made possible due to the new vehicle physics system implemented in Arms Race.

There were numerous other builder features added in this update, such as new dynamically scalable sandbag walls, barbed wire, and walls. We also took the opportunity to make building such structures more cooperative and immersive. Sandbag walls were now built with actual sandbags that could be delivered to the front on a pallet. This was yet another opportunity to push further toward the goal of making Foxhole gameplay tactile and cooperative. It was important to us that players could visually see others carrying sandbags from the pallet to a wall and approach them to help out.

This update also introduced uniforms to the game, a feature we had in mind for a long time. When designing how uniforms would work, we wanted to ensure they fit in with Foxhole's design philosophy. First, we knew that uniforms should be tied into the logistics chain and had to be tactile items like every other piece of equipment in the game. We wanted uniforms to both enhance the role-playing aspect of the game and also serve a gameplay purpose. We were vehemently against the idea of uniforms being like the earned (or bought) skins from other MMOs.

Compared to all the flashier features from this update, the tactical camera was a critical feature that improved upon one of the biggest limitations of the game: the top-down camera. Previously, the amount of viewable space on screen was very constraining, and players had to regularly rotate their camera in a very specific way to see the further targets, a technique known at the time as "corner aiming." We developed a new camera that would dynamically zoom in and out to keep as much of the viewable space the same regardless of your camera orientation. While a top-down camera will always be more limited than a first-person one, the improvements alleviated a lot of the prior constraints, which in turn helped to enable new gameplay features in the future that would otherwise be impossible.

After we released Entrenched, we made a commitment to finally get the project to a 1.0 release. This meant beginning work on the most expansive and ambitious update in Foxhole history.

# FOXHOLE
## INFERNO

Inferno was probably the biggest update the team had ever worked on. This was the 1.0 release, and we knew we had to deliver on several features that players had been excited about for years.

Since the start of the project and the introduction of logistics into the game, players had been asking for trains in Foxhole. We knew that expectations for this feature were high, but we also knew how technically challenging it would be. For years players had speculated how trains might work, and questions such as whether rail networks should be fixed or player-built were regularly raised and discussed. For us, there was no debate: railways had to be designed and constructed by players. There were many design questions to overcome, such as how trains would be produced, how they would move through towns without disrupting them, and how they might impact the balance of supply lines, to name a few. Trains built on much of the technology we developed in prior updates. The rail building relied on the dynamic structure scaling from Entrenched. When it came to their movement, we built upon the knowledge gained from working on the vehicle tech in Arms Race to give train cars physics that felt convincing.

The production process for Facilities was equally challenging. It was like building a new game inside of Foxhole. The goal behind Facilities was to take the production game, which had existed as more or less an abstraction at the Factory, and expand it out into a full-fledged tactile activity in the world. It was important to us that facilities served as both content for logistics players and content for the war in the form of strategic targets for the enemy. One goal was to support different types of Facilities that could specialize in different types of resources and tech associated with them, which is why there are the two branches of Oil and Coal. Facilities gave us the opportunity to leverage the train system we were already developing to add “mine carts” to Facilities in the form of the small railways. When it came to the visuals, we made it a goal to make Facilities look like a dense industrial area and for them to be attractive even when many of such structures were “spammed” in close proximity to each other.

Inferno also added flamethrowers, rocket artillery, and super tanks to round out the 1.0 release. In terms of breadth of code and content, Inferno was undoubtedly the most expansive update in the project. With the completion of this update, we felt like Foxhole had all the features we wanted before exiting Early Access. We were now ready to move on and take the game to new places.

# FOXHOLE
## NAVAL WARFARE

With Foxhole out of Early Access, we felt like the big core parts of the game were in place, so we could start working on a big new expansion of gameplay. The first of such expansions was with the naval game. Foxhole had water-based vehicles like Barges, Gunboats, and Freighters for years but had held back from developing any content beyond this. This was in part because we knew that one day when we had the time and space, we'd want to swing big on naval. Now was our opportunity to do so.

We knew we wanted to work on much larger ship classes, and now we had another opportunity to further explore one of the core goals of Foxhole: large-scale player collaboration. The design of large ships was centred on this; we wanted large player crews working together to operate these vessels. During naval engagements, we wanted the more cohesive group to be the most effective, which meant players working in different roles in various locations on the ship, including ammo rooms, engine rooms, gun control, barracks, and more. To achieve this, we had to support fully fleshed-out ship interiors. There were many technical issues to overcome for this, including characters being able to walk underneath the water plane and support for players being on multiple floors of a vehicle. On the content side, creating the 3D models for these massive ships was unlike anything the art team had tackled before, and each vehicle ended up taking more than twice the original time we thought they would.

The size of ships proved to be another hurdle to overcome. There was much debate among the team as to how big they should be. Making them bigger meant more technical issues and design edge cases, but making them smaller would be less immersive and less representative of their real-world counterparts. In the end, we tried to make them as big as possible while ensuring they could still traverse through all the bridges and narrow rivers in the world.

One of the more contentious decisions was around the design of submarine gameplay. The initial proposal was for submarines to not have the interiors that other large ships had and to be more similar to tank gameplay, where players entered fixed seats from the outside. This would allow the camera to remain above water at all times, which would allow for a simple solution since the seas and lakes of Foxhole were never designed to be viewed from underwater. After some internal discussions, we decided it would be much more immersive (albeit more difficult to implement) for submarines to have interiors and for the camera to submerge below the water. This required us to update the game to support underwater rendering and required level designers and artists to essentially add underwater landscapes to every region in the world, which was a long and arduous process.

The other flagship feature from Naval Warfare was towing. The engineering team was able to build on the vehicle physics model introduced in Arms Race to enable vehicles to tow trailers and field weapons behind them. Towing had been requested by the player base for years, and we were excited to finally deliver.

Unlike the plan for Naval Warfare, there was never a guarantee for aircraft to ever be in Foxhole. In 2018, the art team had created a gameplay mockup for how paratroopers might work, but it remained a concept until we made the decision to begin work on Airborne early 2024, several months after Naval Warfare had shipped.

Some major decisions on how to approach air warfare had to be established at the beginning. Some early design pitches included having aircraft be controlled by AI and summoned as airstrikes as they are in many real-time strategy games. Other ideas included aircraft gameplay existing on a playspace and server that was separate from the ground and naval conflict. While we knew it would be the more challenging path, we decided fairly quickly that aircraft should exist in the same unified playspace as the rest of the persistent war. The other big design decision that shaped the update was to put a major emphasis on ground crews and logistics. Aircraft effectiveness should depend on the effectiveness of other players in different roles, a philosophy we've always stuck to.

The team began work on a prototype for aircraft almost two years before Airborne's release, working on it in the background alongside other updates that were shipped that year. Figuring out the user experience and controls for piloting aircraft was a difficult process. We held team-wide internal playtests with different control schemes for aircraft, and opinions varied. Some gravitated toward versions with more of a first-person experience, which you see in other flight simulator games, while others preferred sticking to more of a top-down camera perspective. While the final interface leans more toward the Foxhole's existing camera, there are aspects of the other schemes that helped shape the final experience. Through iterative testing and development, key elements like the aircraft-to-ground indicator, panning camera, and dive mechanics helped to make air-to-air and air-to-ground combat viable.

It took a lot of additional work to make flying over the world of Foxhole feel convincing. In early flight tests, grass and foliage weren't rendering properly, shadows were buggy, and structures were popping in and out of the viewport in distracting ways. The engineering team had to solve all of these technical problems to make the flight experience serviceable. On the art side, several new visual features were implemented that elevated the experience much further. This included adding sky fog, clouds, contrails, and other effects. The biggest change was in the landscape graphics below on the ground. As part of this update, the art team had been working on an entire overhaul of the natural environment, which included redoing all the grass, foliage, and landscape materials in the game to be higher fidelity and more realistic. The overhaul organically made the landscape look much more convincing when viewed from the high-altitude camera used in aircraft gameplay. It all came together to make the paratrooping experience really shine as players jumping out of an aircraft can see Caoiva in all its glory as they descend from the sky onto the ground. Speaking of paratroopers, it was important to us that players could physically walk inside the interiors of aircraft, and this is something we'd like to see expanded upon in the future.

Airborne was an expansive update that also included a sizable drop of naval content focused on early war and small group gameplay. We also wanted to further expand the world to give naval and air warfare more room to breathe, as the existing map was starting to feel too small for the new breadth of content.

It's been a long path bringing Foxhole from an initial small prototype to the game it is today, and we are looking forward to continuing the journey beyond Airborne.

## Early Lore and World Development

During early prototyping, our idea of what the world might be was a lot different than what would eventually become the Foxhole we now know. When we started, there was no Caoiva, no Wardens or Colonials, no Callahan, no Maros. Our first attempt depicted our Earth ravaged by the fallout of an alternate history second World War.

I spent quite some time playing with different directions to flesh out this version of Foxhole's world. It involved real-world powers turned unrecognizable in the wake of eternal war. In hindsight, there were some novel ideas that could be interesting for someone to explore one day, but for our needs, it simply didn't fit. At some point, Mark and I locked ourselves in a meeting room for a couple of hours to brainstorm what would eventually become the Foxhole we now know.

We were intrigued by how history informs current events in reality and fiction. Lord of the Rings isn't a rich world because of the plot; its deep history enriches every detail of the world, informs character motivations, and gives context to the unrecognizable. We also explored what would happen if nations structured like feudal empires waged war with early 20th-century technology.

Building our own world meant we could explore many interesting avenues and build unique cultures and rival nations that have clashed for centuries without the baggage of considering real-world implications or expectations. These concept sketches by Julian were some of the first pieces done for Foxhole. They may look quite different, but they represent some of our earliest explorations of what the world of Foxhole could be.

- Matt

## Early Concept Paintings

Some of the first large paintings to capture the mood of the original pitch for the game - a world war that just kept going, where technology didn't advance but armour got thicker, and guns got bigger to match.

At the beginning of the project, the idea that players would be fighting around the relics of monstrous large tanks existed. In the player's time, these relics would be lived-in, fortified locations.

Pictured to the left is the behemoth that breached the Bulwark, back when we were exploring some more fantastical elements.

## Early Game Mood

Something that has always been consistent is that we wanted the era of the game to be analog to the 1920's through 40's. The game could not feel like it was steampunk or dieselpunk. A post-apocalyptic world was also ruled out. We didn't want the game to feel like you were a ramshackle gang roaming a deserted waste land.

The visual target to hit was the feeling that great wars had been fought here, but there was still life in the land. It was still worth fighting for, again and again.

The Bulwark has always been a fun centerpeice to paint. - Julian

A lot from these early paintings have been retained in the final game. Not all the ideas made it, but we are proud of how much of the mood we captured. What Foxhole has become is something greater than the sum of its parts.

The project is alive and continually growing, and we are happy to share the visual development that has gone into it so far with you. - Julian

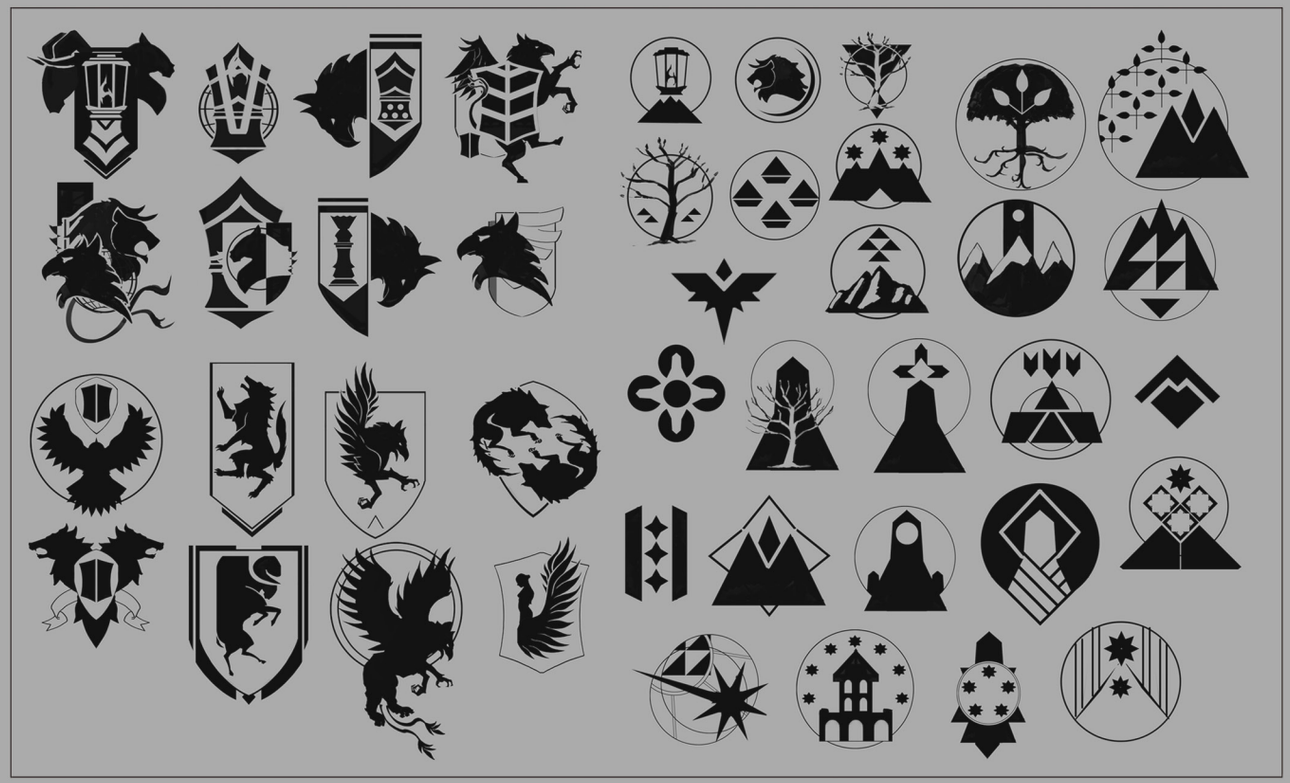

## Faction logos

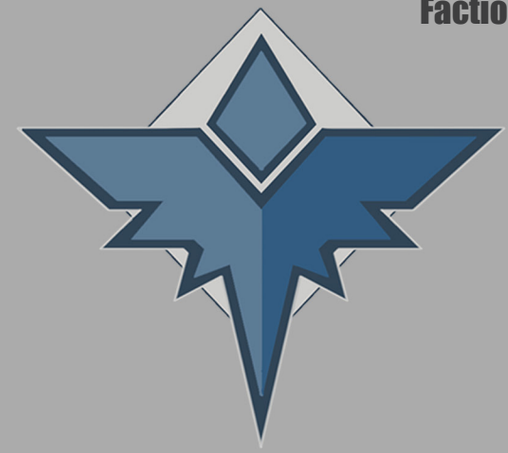

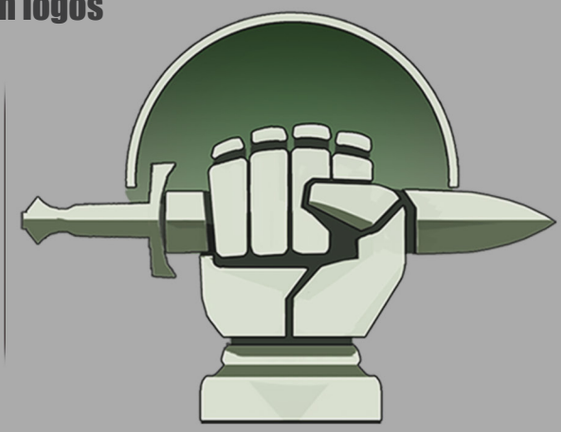

Significant effort was put into the iconography of our two warring factions. The biggest hurdle here was developing a visual language unique to each faction that instantly communicated their traits and broader cultural characteristics while belonging in the same visual realm.

Colonials are the military arm of an expansionist nation comprised of vassal states. Their iconography must be simple. To the point. Not overdesigned. What began as a simple sword design (which would later be repurposed for ancillary flag designs) evolved into an armoured fist grasping a blade meant to convey Mesea's unrelenting strength, even in the face of imminent death.

Wardens are Caoiva's primary military force. Their logo was meant to feel a bit more modern, flashier. The sun and stars were always major parts of Caoivish culture and present in their religious beliefs, but woven through a bird of prey motif. In this way, the Warden logo paid some tribute to how medieval "house" crests often featured animal iconography.

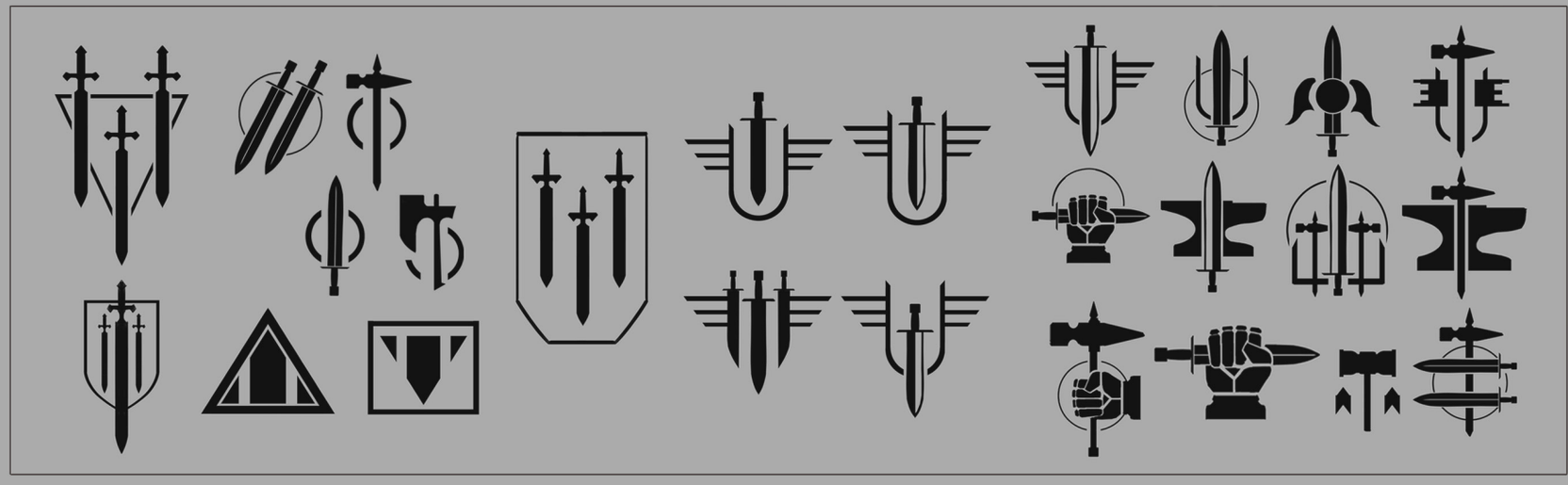

Early faction and class exploration.

These sketches start to capture the personallty of the factions. A lot of time was devoted to the look of the models when seen from our camera.

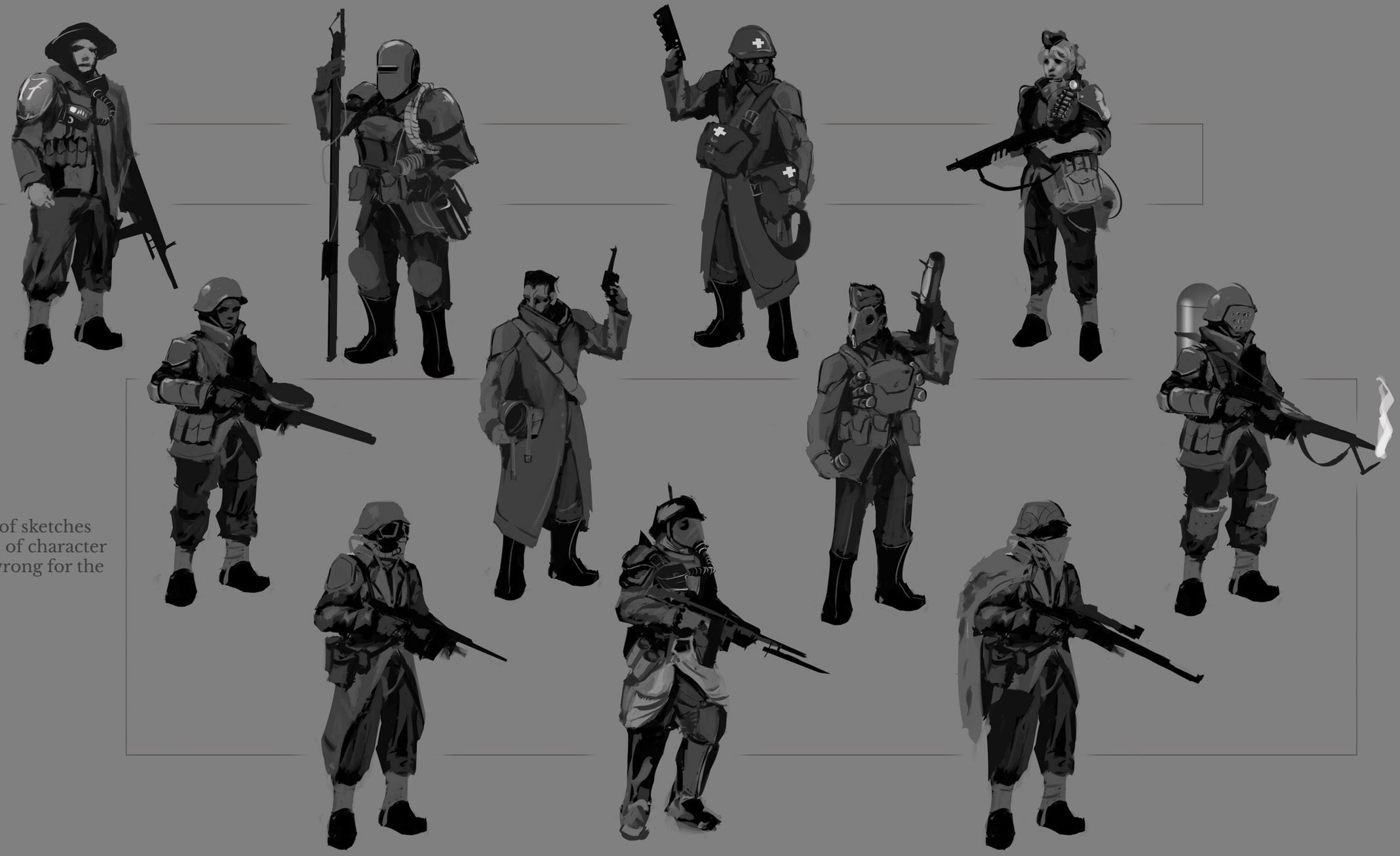

The very first set of sketches done in 2016, full of character and completely wrong for the game. - Julian

A different round of exploration - at this point, a few ideas started to form that made it into the final designs, but this was still considered the wrong direction for the game. At the very beginning of everything, it took a few iterations to figure out how far from real life the team wanted to take the project. We pushed too far and then brought it back to reality.

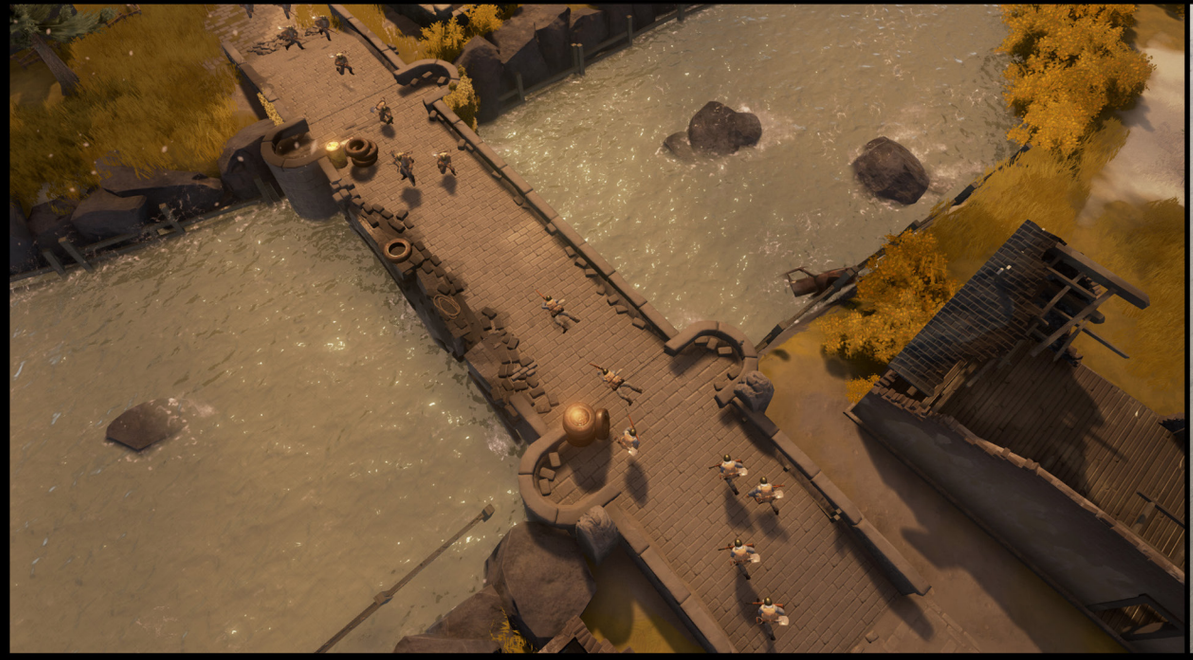

## Early Visual Development

There was this illustrated history book we had kicking around the office that featured top-down watercolour paintings portraying World War II battles and tactics. They reminded us of wargaming dioramas. Our earliest explorations were attempting to capture that painterly quality and sprinkling in diorama vibes without walking into cartoony territory. - Matt

## Early Concept Art

This old concept art almost looks like it's for a different game now. When I was hired on as the concept artist, the prototype was already underway. The first buildings, weapons, character models and truck were already in the game. The early visuals had a more simplistic look to them, at first I was matching the new designs to the existing world.
- Julian

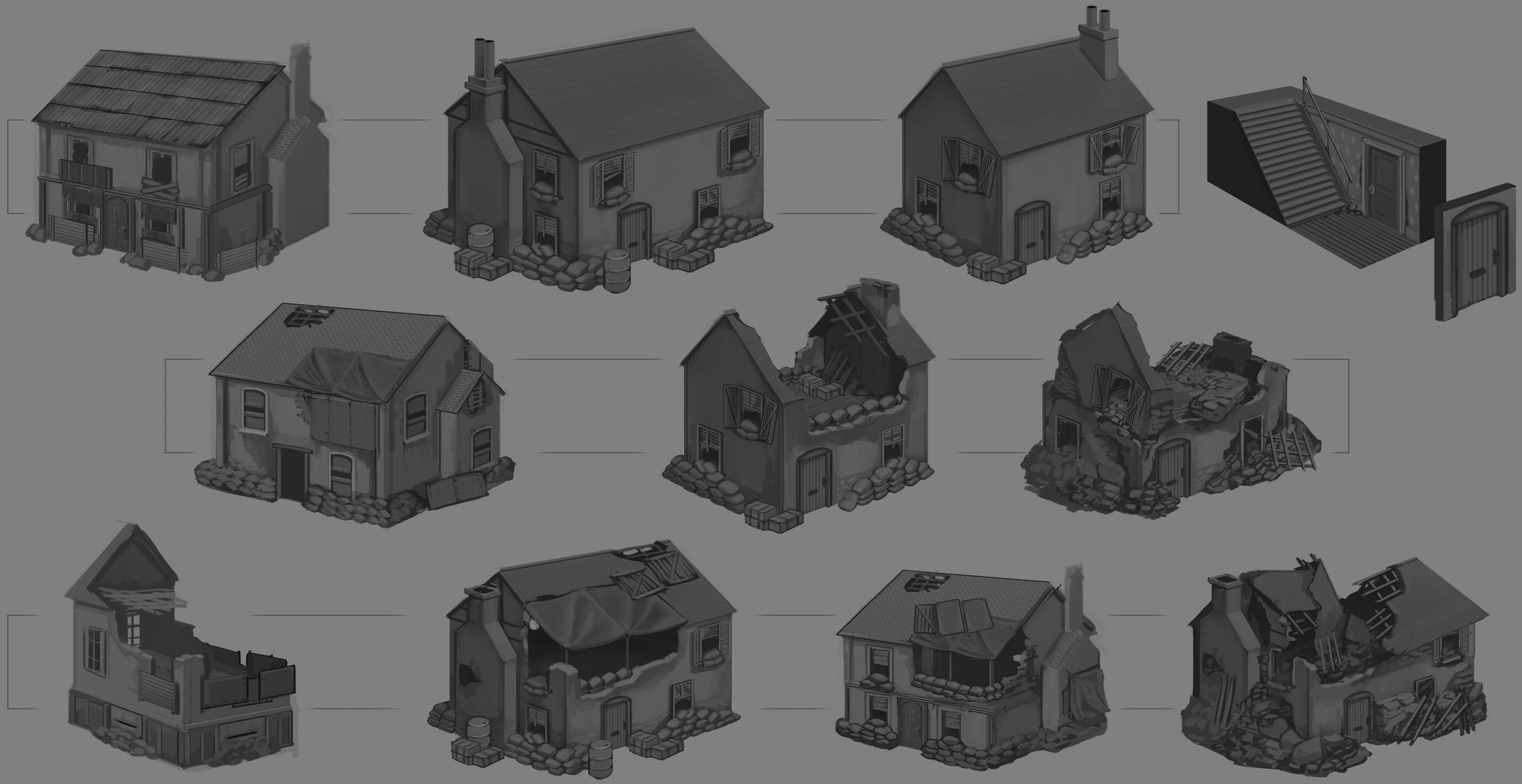

Garrisoned houses designed for the early prototype game.

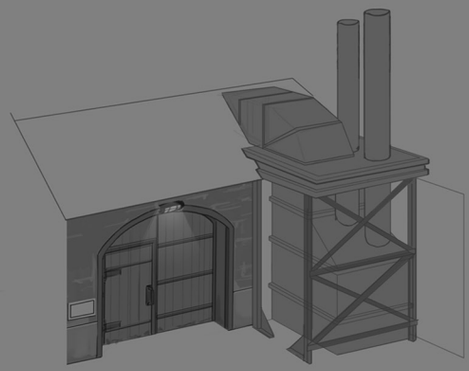

There was an early ruleset that Foxhole is not a post apocalyptic world, and that buildings, while war torn, still have life to them.

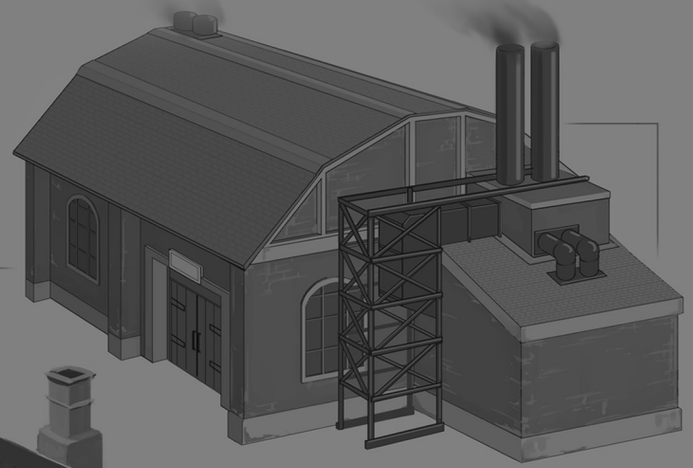

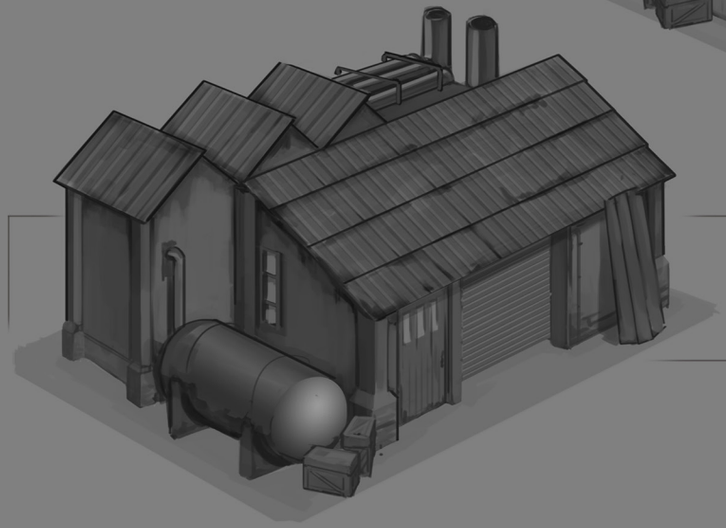

All the early art for buildings had a much more simplistic cute look to it.
- Julian

A fun look at the personality of early game design. At this point the factions were being developed alongside the Pill Boxes and Anti Tank Turrets.

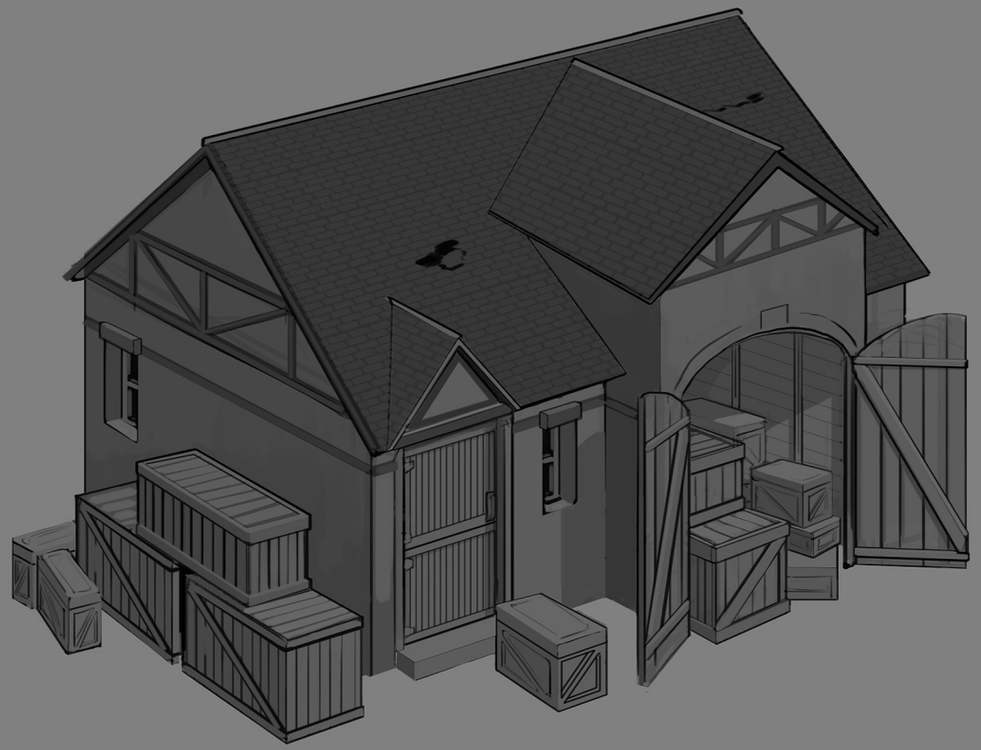

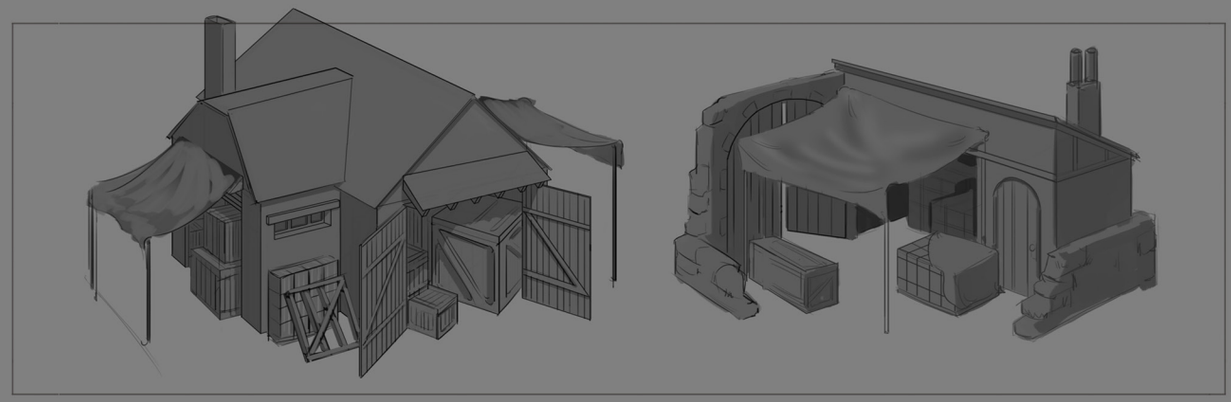

Ideas came and went; gameplay changes dictated that a lot of buildings be designed and replaced over time. Of note were Border Check Points, which were an idea of how players could transfer items from one map to another..

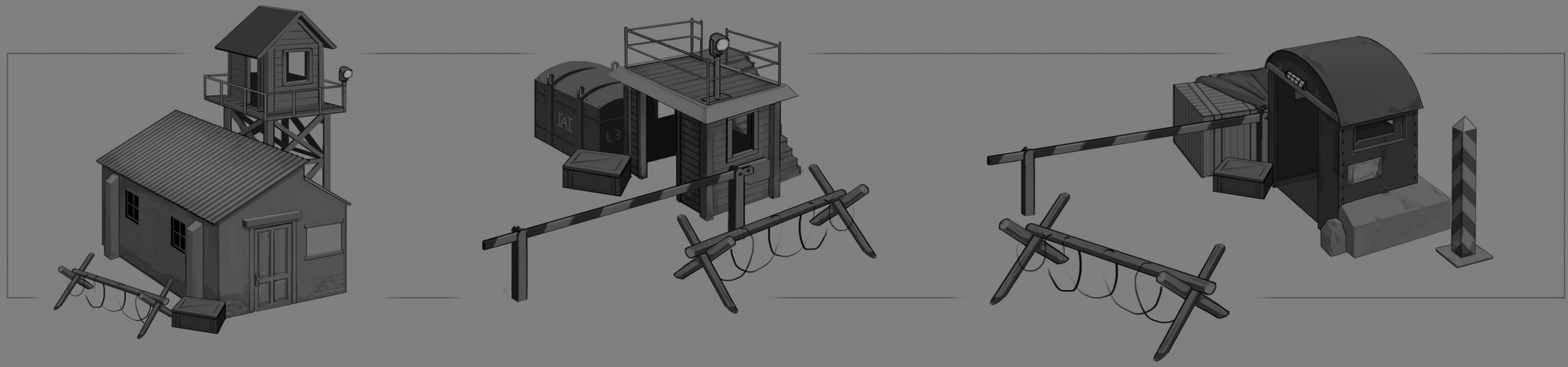

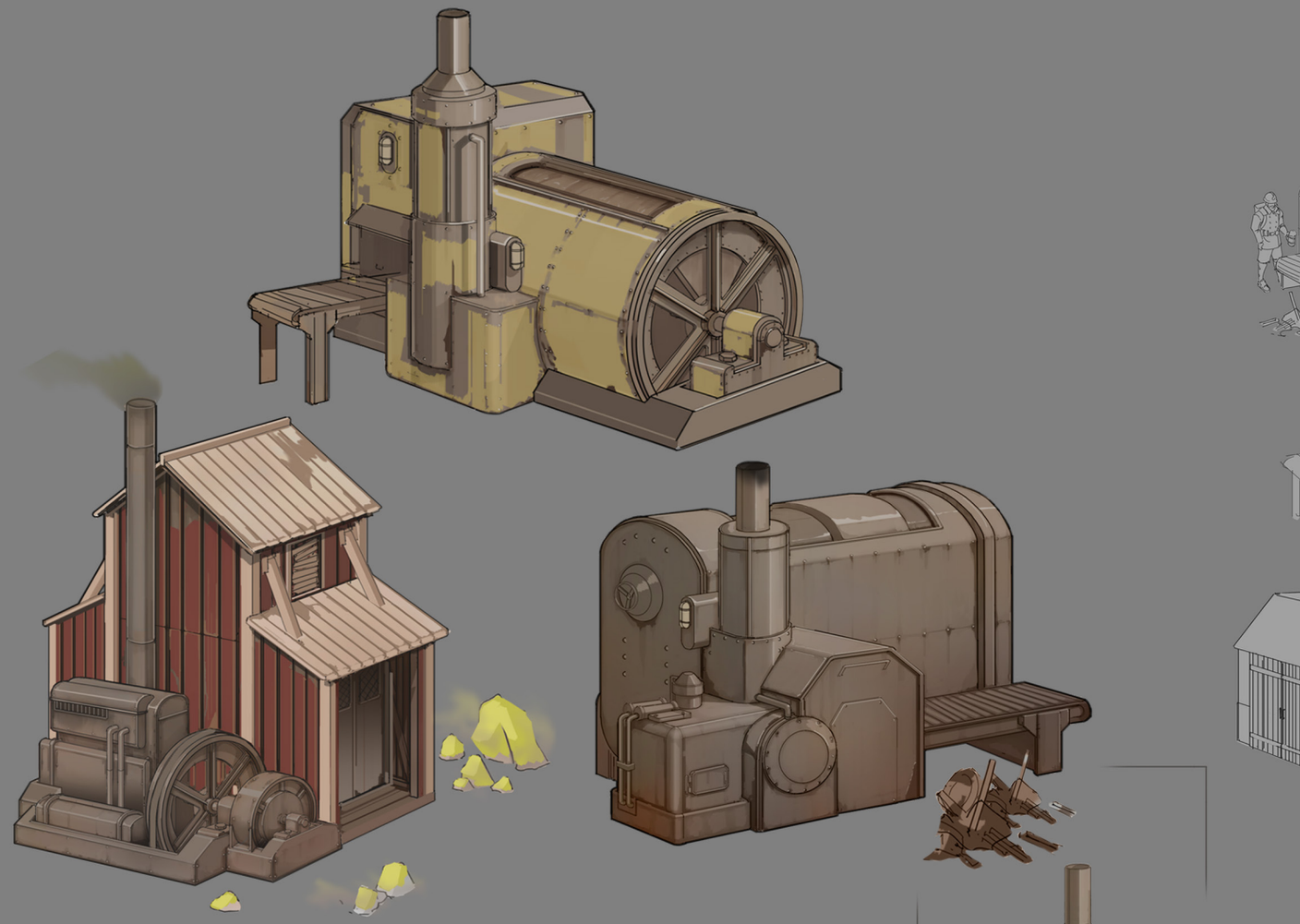

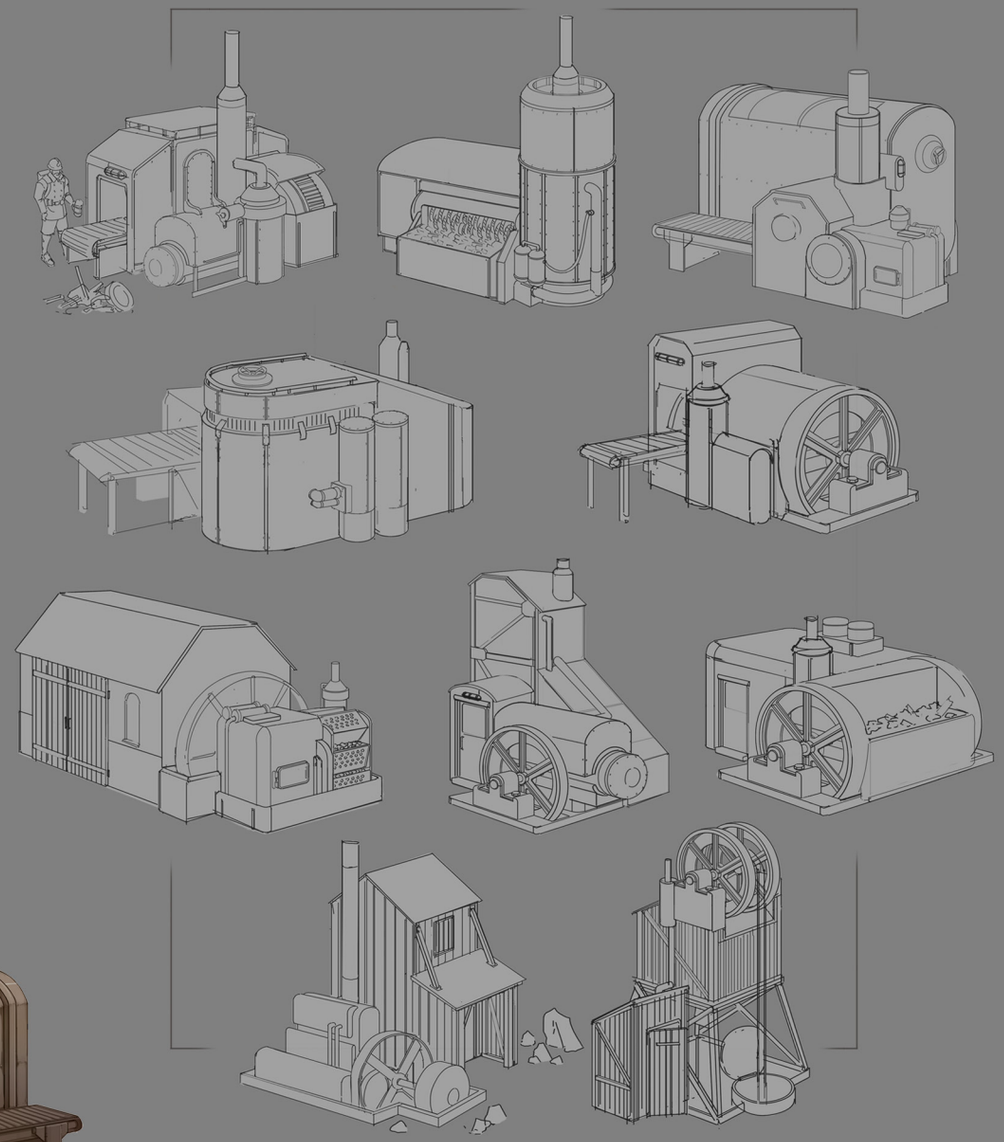

## Mines

A particularly enjoyable task, the Salvage, Component and Sulfur mines were a chance to design assets for the game with no real world analog. It was fun to have the chance to explore mechanical shapes, and come up with something that looks functional but doesn't need to be fully explained. - Julian

## Early naval, struggles building coastlines

Early naval explorations were fraught with design challenges. Turns out building open, dynamic maps that serve different gameplay styles and freeform exploration isn't quite so straightforward. It took significant prototyping and lots of time spent at the drawing board to get beach landings and amphibious vehicles working at all, never mind feeling good.

Initially, we relied on beach terrain sculpted to a specific angle for landings. We would iterate on vehicle physics and evolve our workflow with custom tools. It made designers' jobs a lot easier, but it can't be understated what a technical undertaking it was just to get it up and running. - Matt

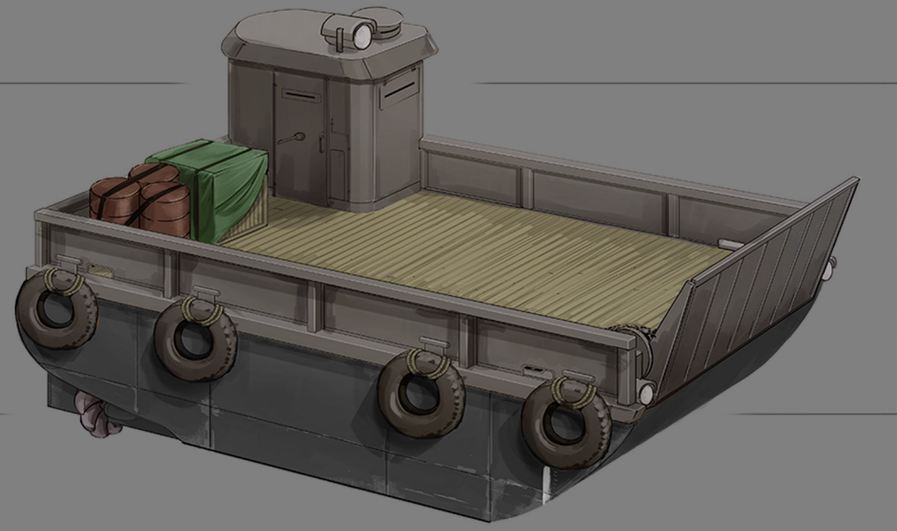

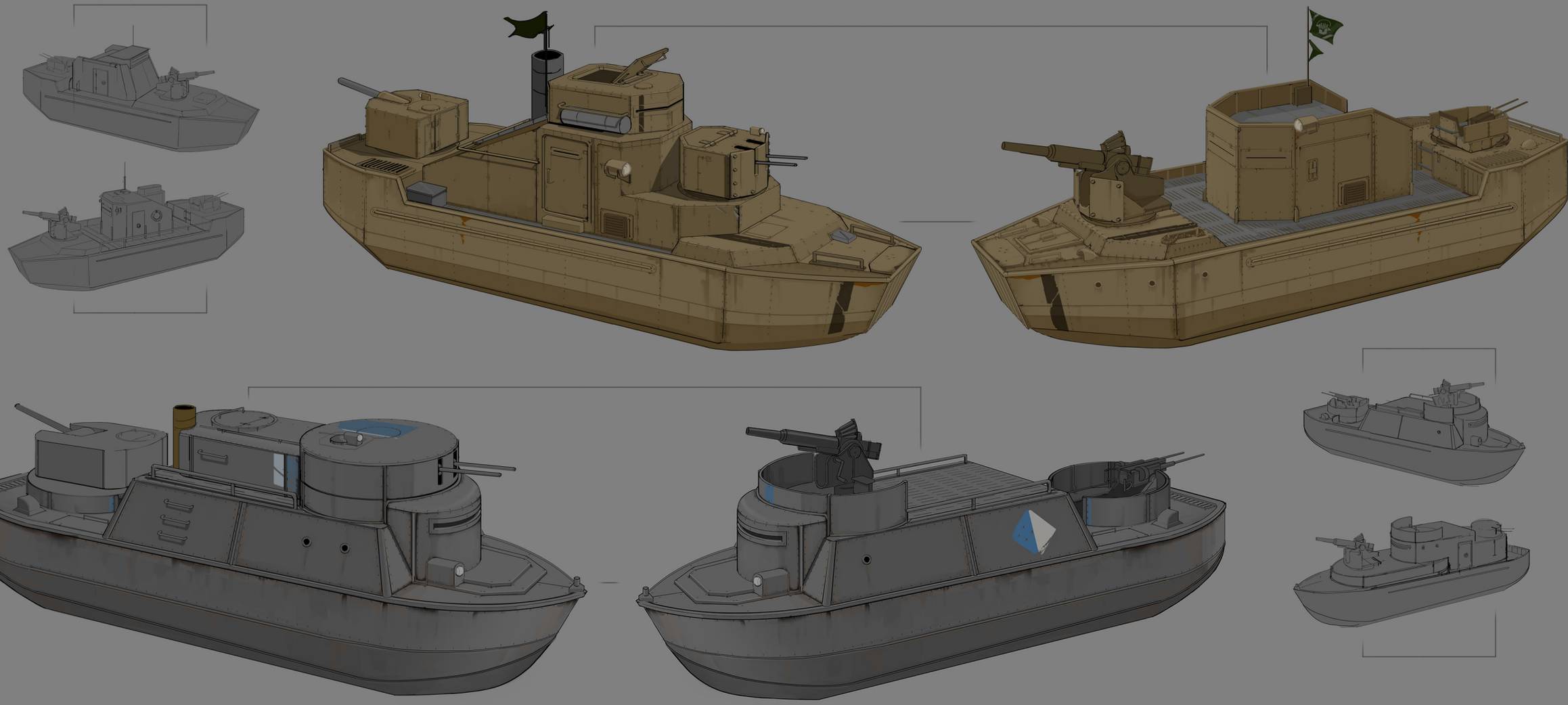

## Early gunboats

The first attempt at combat boats in the game was fraught with technical problems. There was no physics at all to vehicle movement and they drove like trucks on the water. The walkable deck area caused non stop issues. However, they are looked back on fondly now. The first redesign removed the walkable areas because of all the issues, and these boats stayed in the game for a long time. We knew that in order to implement a naval game correctly, we would need to wait until we could devote all our effort to its development.

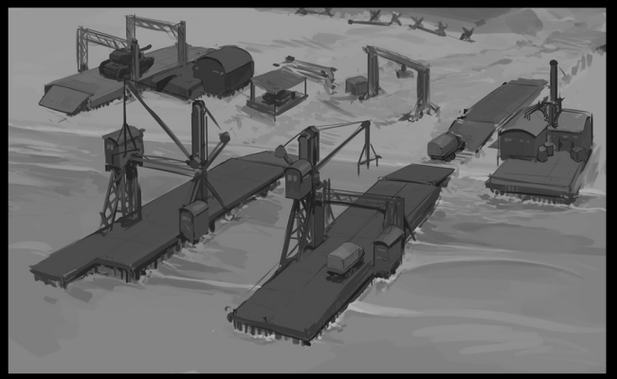

## Coastal Logistics Hub

Some early exploration into the logistics game, these screenshot paintovers were a breakthrough moment for the game designers in what the back lines might look like. Although the idea of a dedicated port area as depicted here didn't fully materialize, the image of lively heavy industry permeated the game.

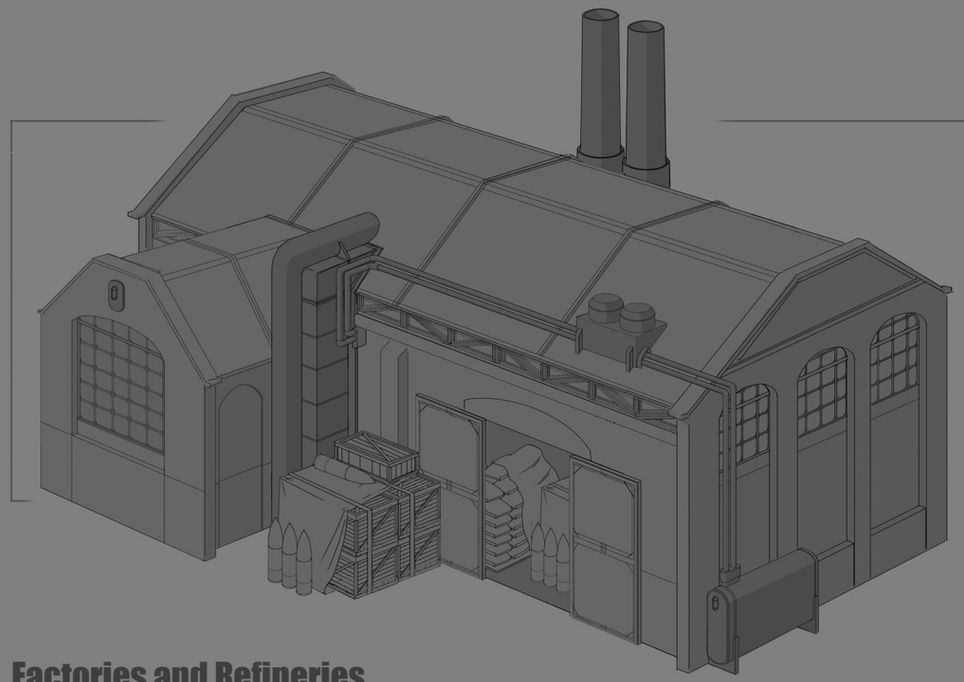

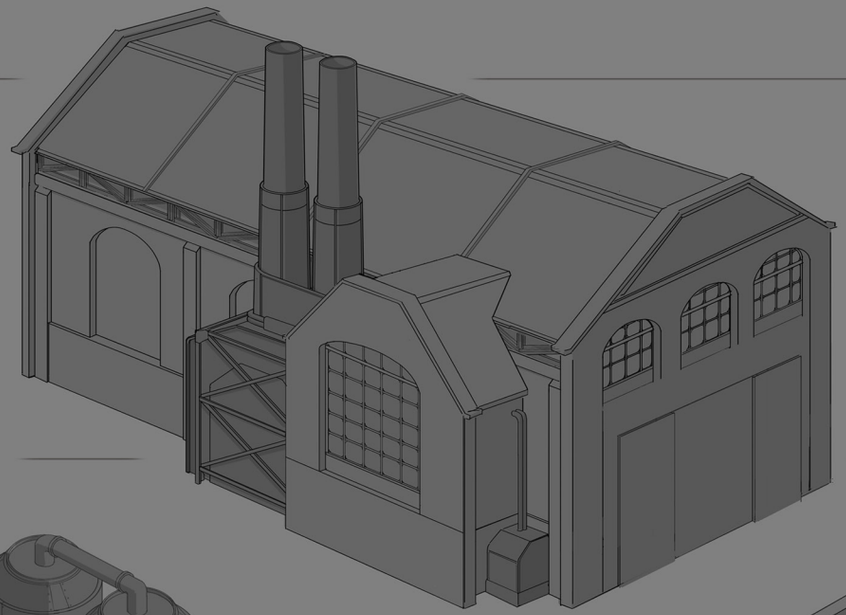

## Factories and Refineries

Factories and refineries were designed when the gameplay mechanics and gameplay loop for logi really got developed.

At this point, a lot of the texture work was being established. Red brick would be the key visual identifying feature of the logistics building in towns.

With a theme of player input, visual upgrades on the buildings were added. Small assets like crates, ammo boxes and sandbags appeared with each upgrade. This was a design idea that would come back in the much larger Facilities feature years later.

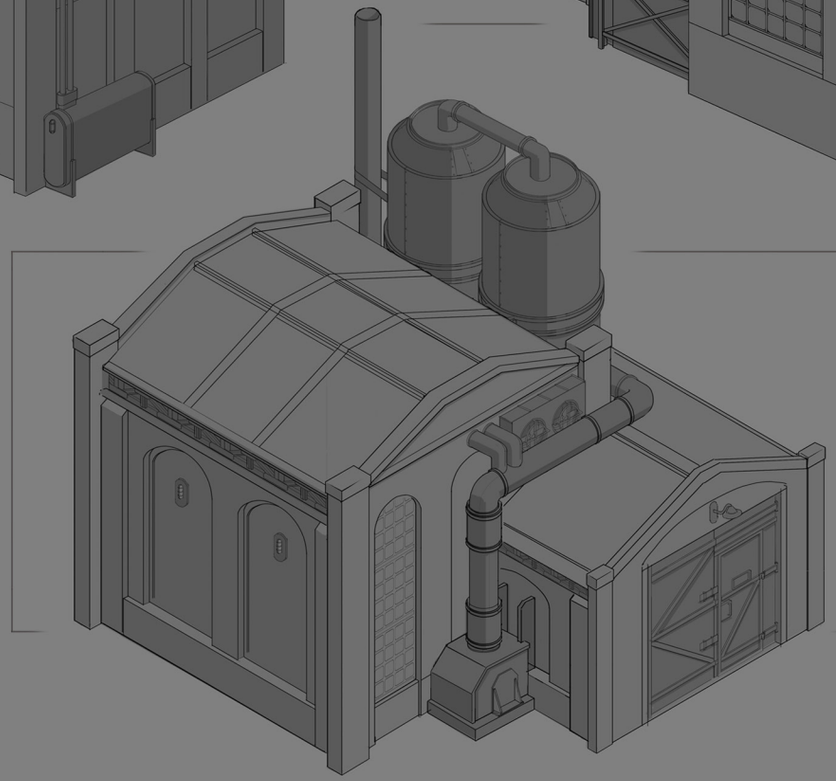

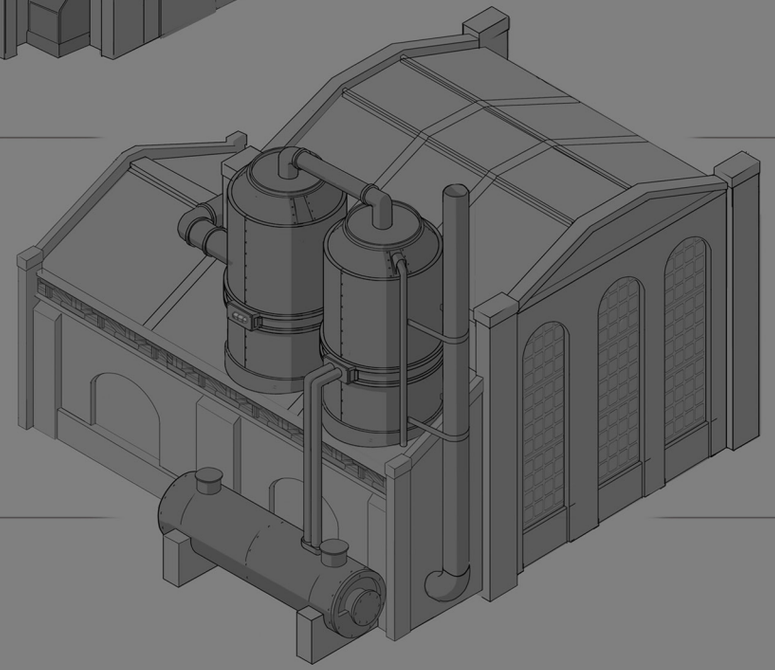

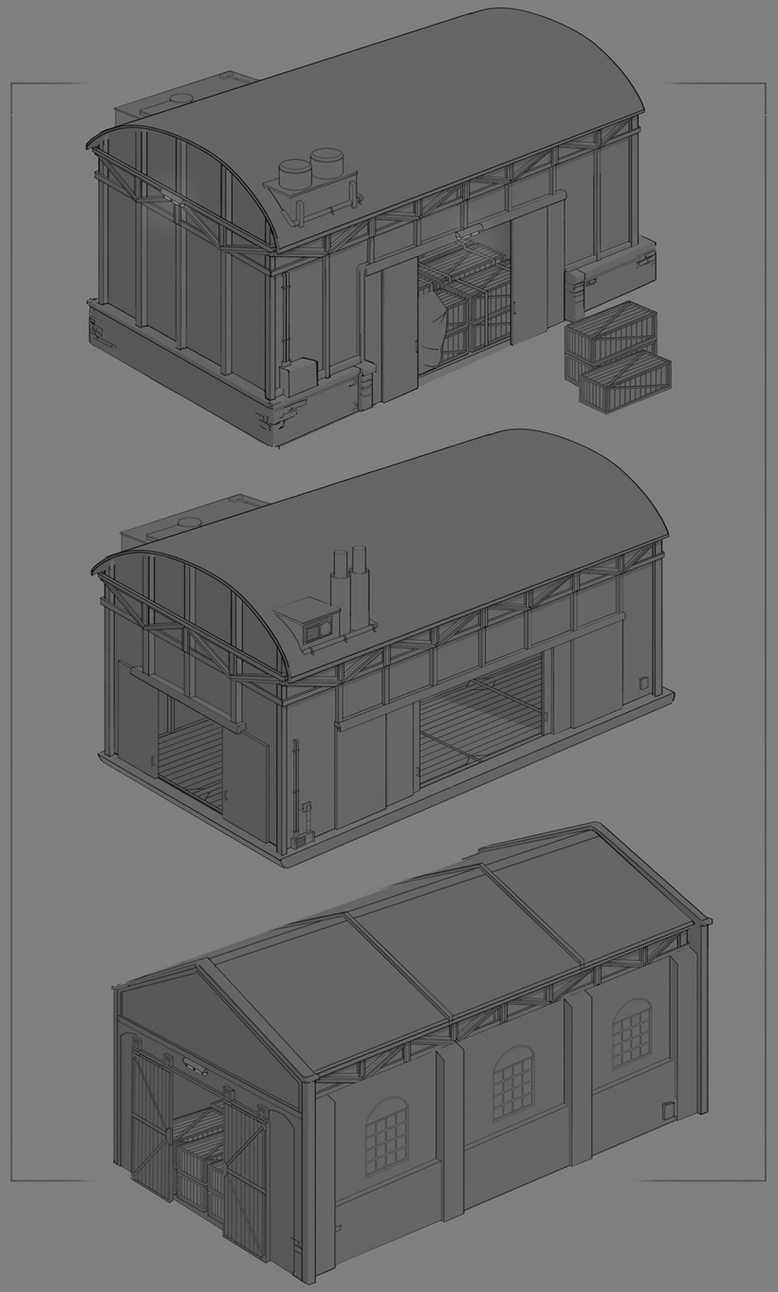

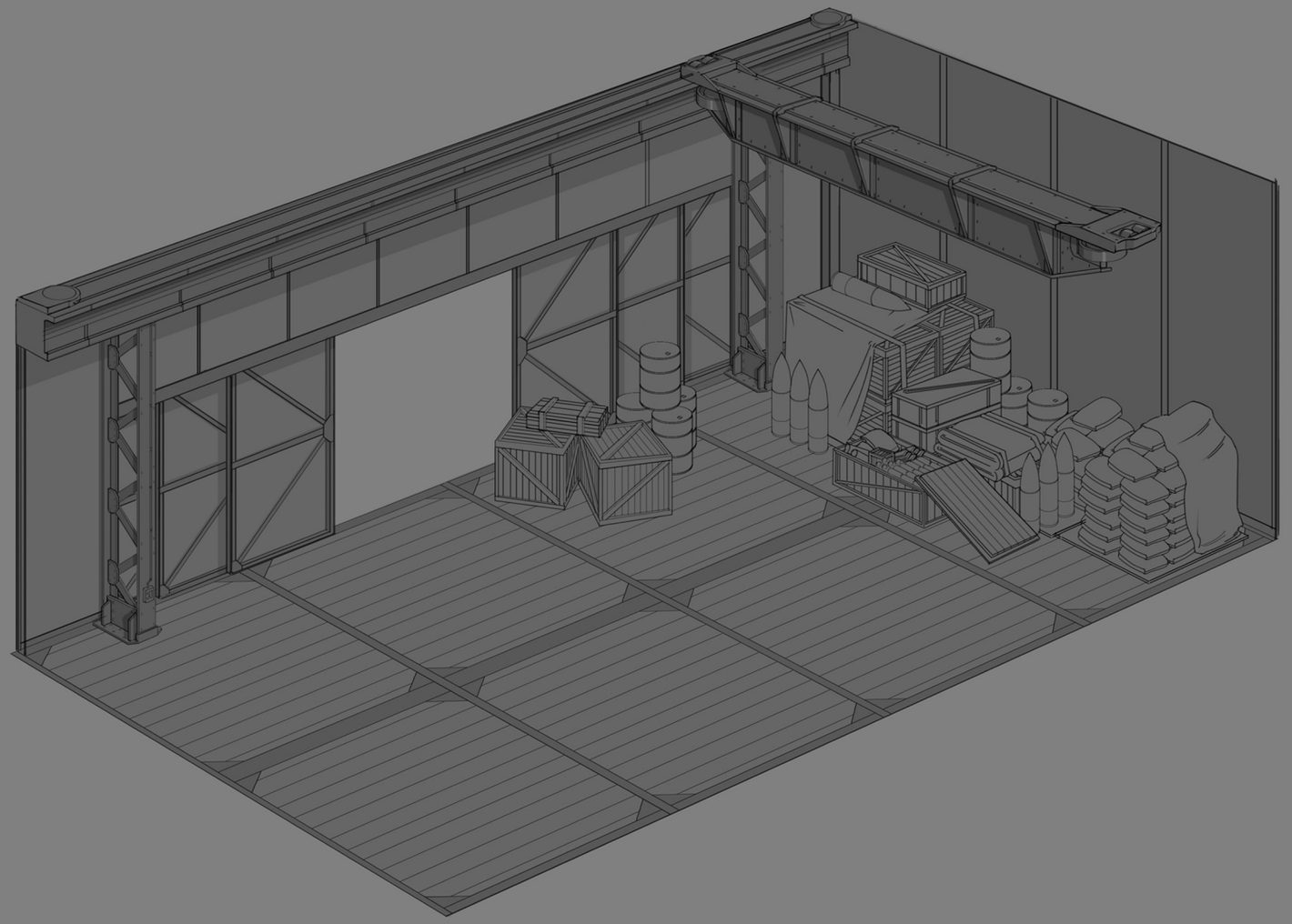

## Storage Facilities /Depot

Storage facilities and depots have long been a part of the gameplay loop, and a number have been designed over the years. More than once the idea of an interior was pitched and explored.

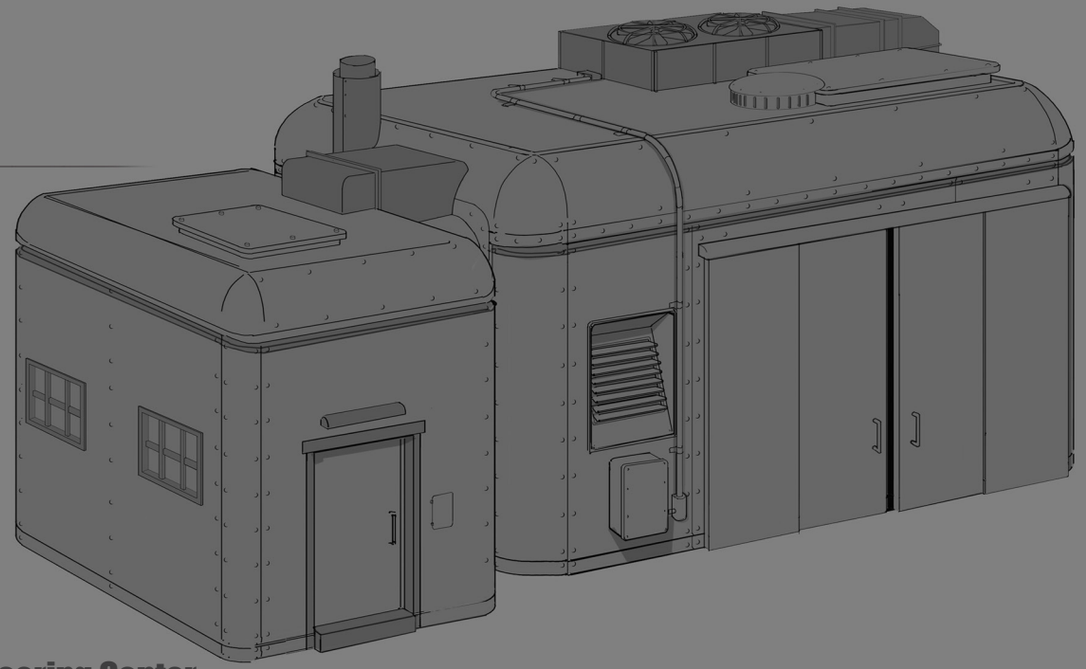

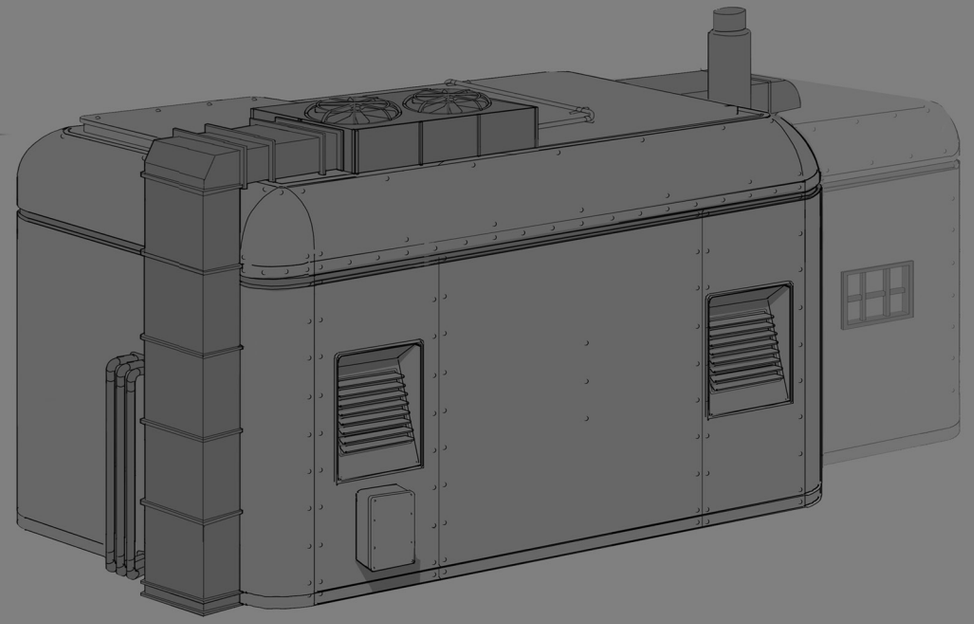

## Engineering Center

The Engineering Center is a core component of the game, and part of the task was to make a design that stood out from all the other buildings. At first a bunch of houses with weird tech attached to them was tried, but what really stood out were some drawings based on armoured train cars with curved roofs. What sold the look was the addition of a garage door. The idea to paint them faction specific colours came in at the last minute.

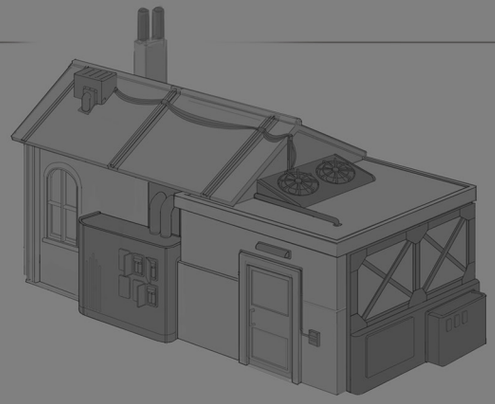

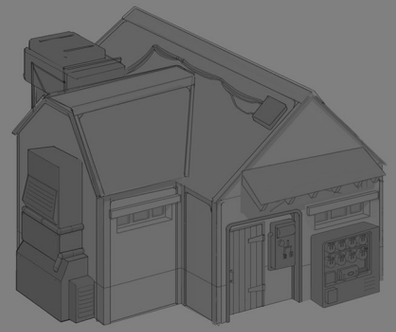

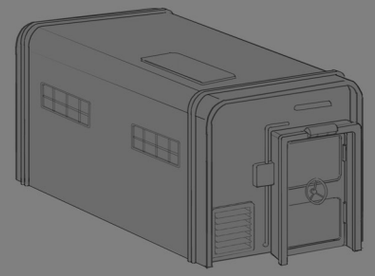

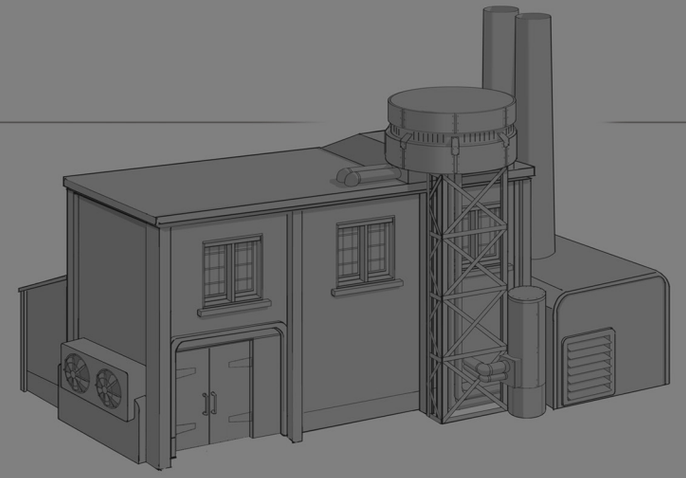

## Stationay Cranes

Not added until later in development, the stationary crane originated from a simple sketch. The addition of cranes really brought the logistics to life with added animation and verticality. This sketch would later inspire player-built cranes including the Sky-Hauler.

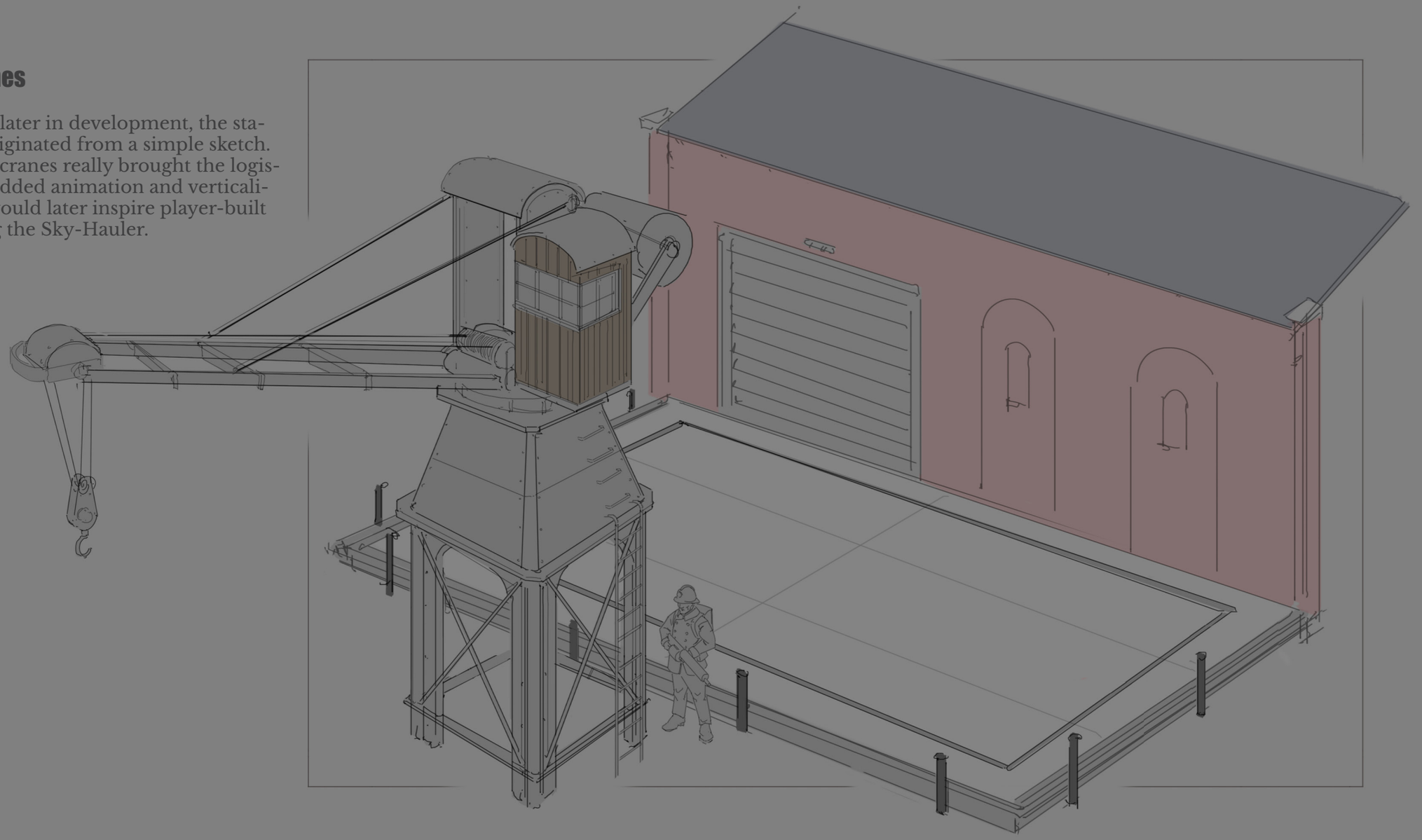

## Coastal Logistics

Early on, a design for coastal logistics was created. These were large areas of industry and potential starting points at the beginning of early wars. Based on the screen shot paint-over seen earlier, some concepts were developed, themed around bridges used in real naval beach landings.

The actual assets are now only visible in the home regions and the design language can also be seen in the player-built temporary Field Bridges as well as the large pre placed heavy metal bridges over the relic trenches in The Moors.

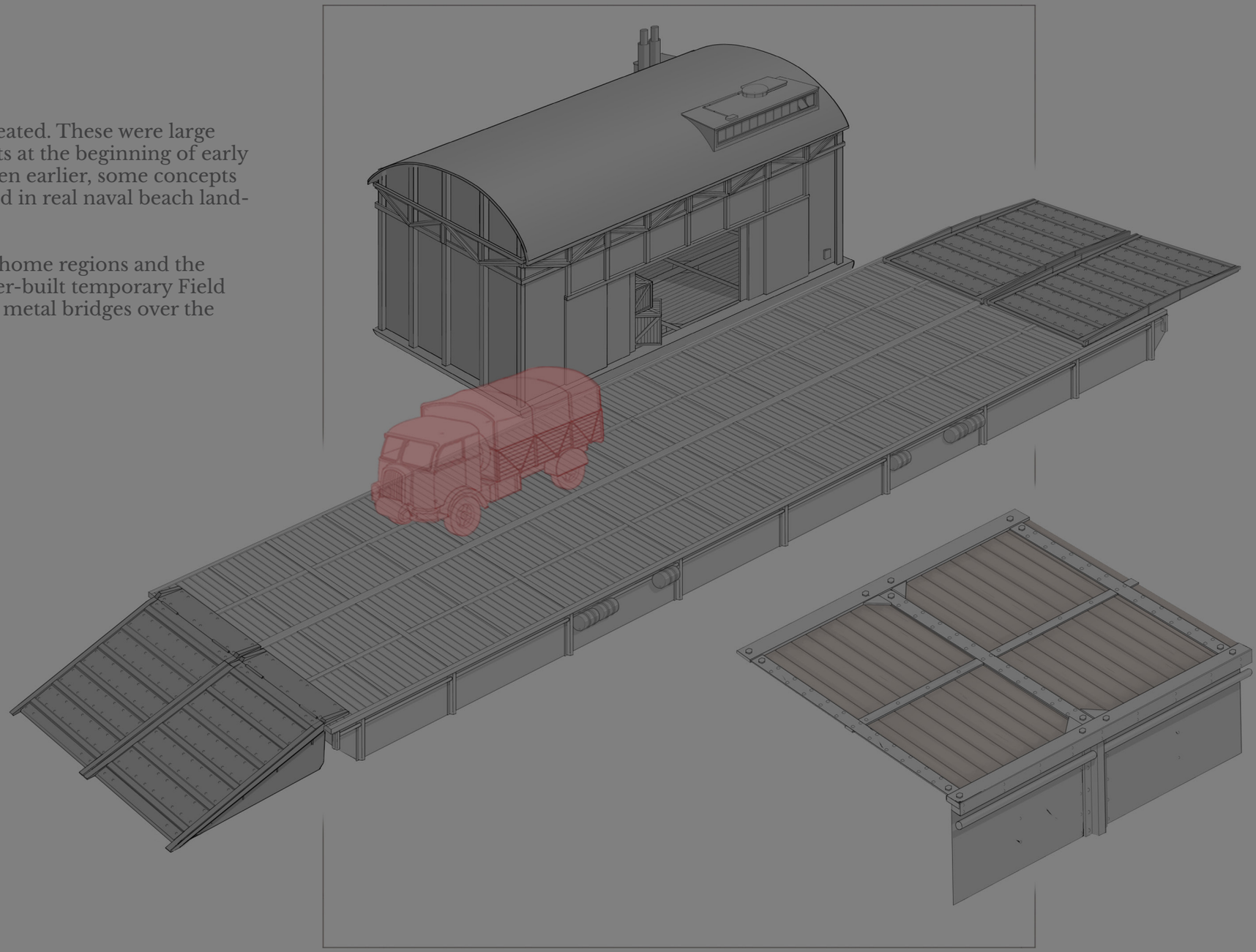

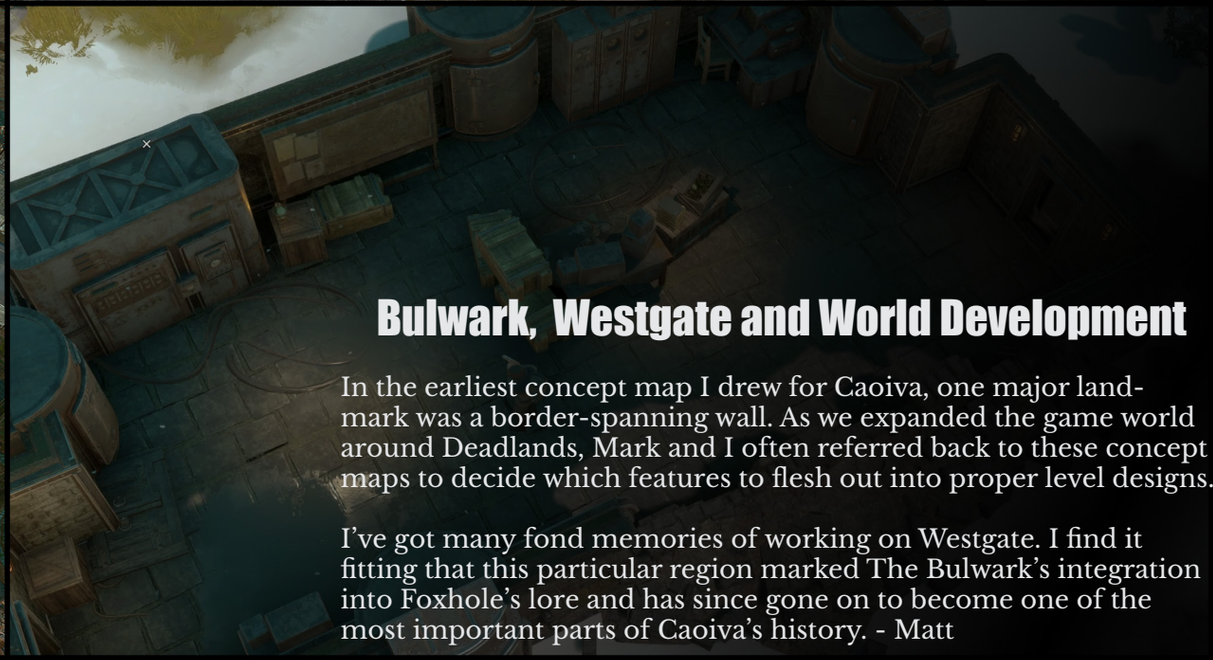

## Bulwark, Westgate and World Development

In the earliest concept map I drew for Caoiva, one major landmark was a border-spanning wall. As we expanded the game world around Deadlands, Mark and I often referred back to these concept maps to decide which features to flesh out into proper level designs.

I've got many fond memories of working on Westgate. I find it fitting that this particular region marked The Bulwark's integration into Foxhole's lore and has since gone on to become one of the most important parts of Caoiva's history. - Matt

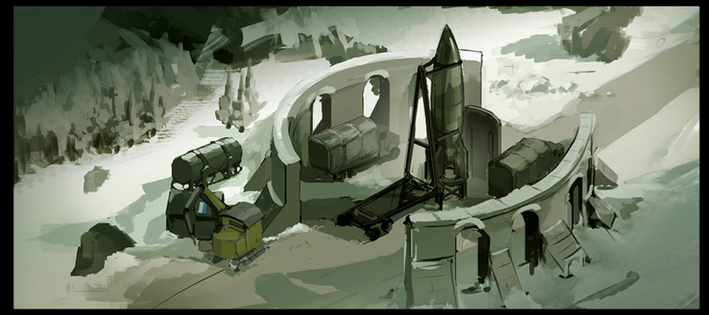

Westgate had always been quite clear in my mind. Julian painted this really striking mood art of the Westgate Bulwark set atop a cliff with rock spires jutting out towards the sea. I've always felt it was such a perfect distillation of Foxhole's atmosphere. - Matt

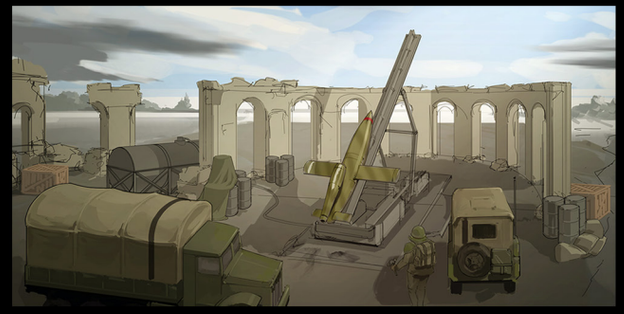

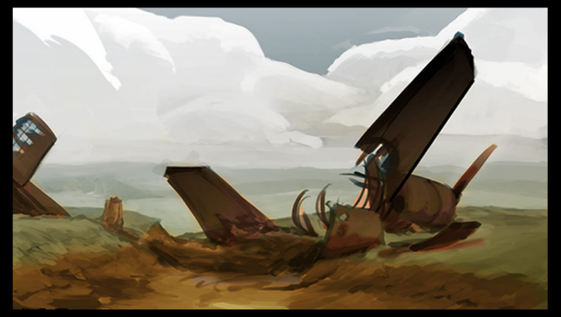

These mood paintings were made to develop the battle-worn environment. The idea of these giant tanks being salvaged for resources continually popped up during the early years of the project. Mood art of them in battle was also developed to visualise what they may have looked like during the Great War.

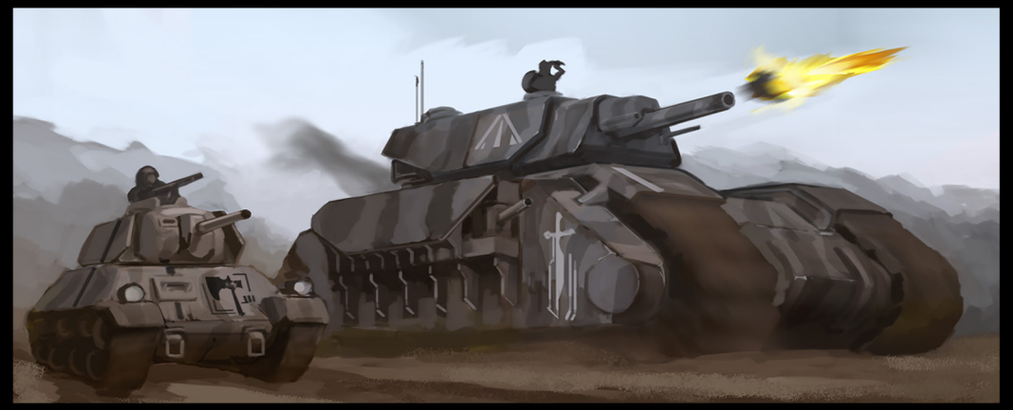

*Seen left is the first painting that led to the 'Weapon' theme that would become key to the Colonials. - Julian*

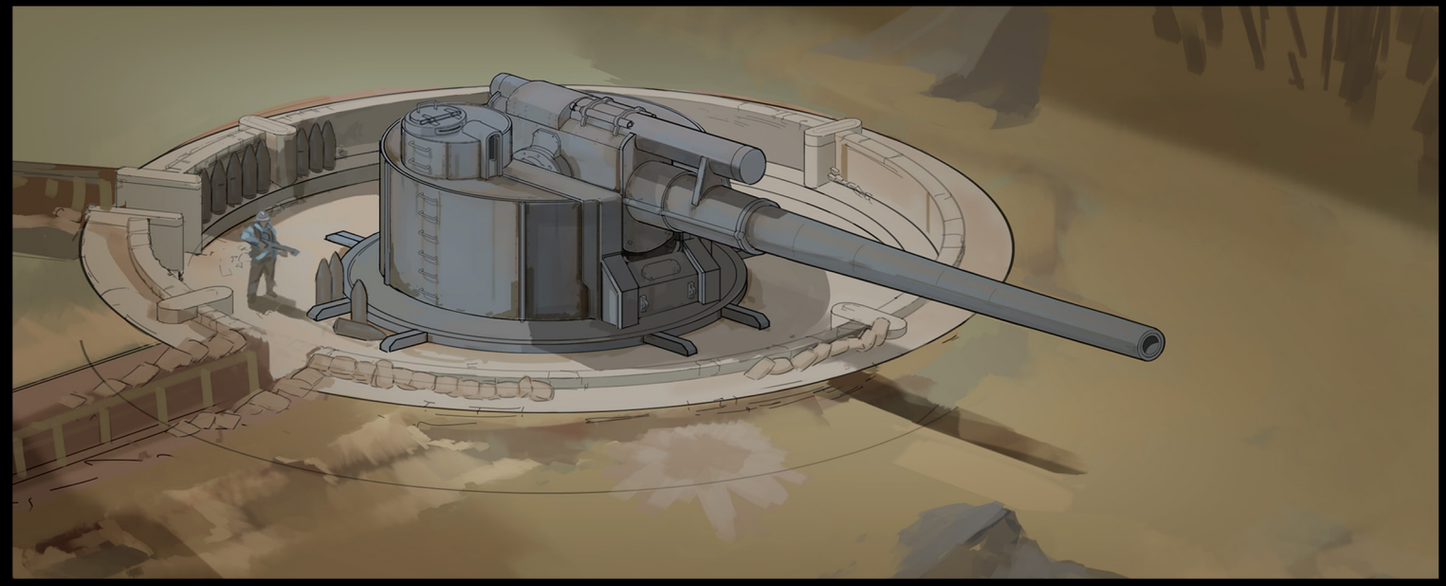

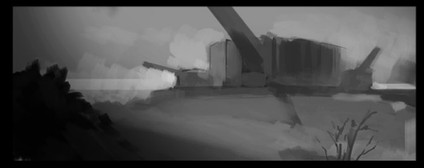

Mood paintings that developed into gameplay ideas. These were originally just locations in the game that players might find and fight over. The Coastal Guns and Intelligence Centers started as part of the Bulwark and a giant defensive network built for a war long over.

## The Bulwark

The pitched lore idea for the wall saw it as a structure built before ‘The Great War’. It was part of a large castle fortress network which, at the outbreak of ‘The Great War’ decades later, was reinforced with cannons and turrets as a break water against the Colonial Legion. In the player’s era it is meant to look like a structure so vast that it could not be built again. Towns and the very landscape itself are living in its shadow. As actual production on the asset began, the team was tiny and we had to get as much of the vision in as we could.

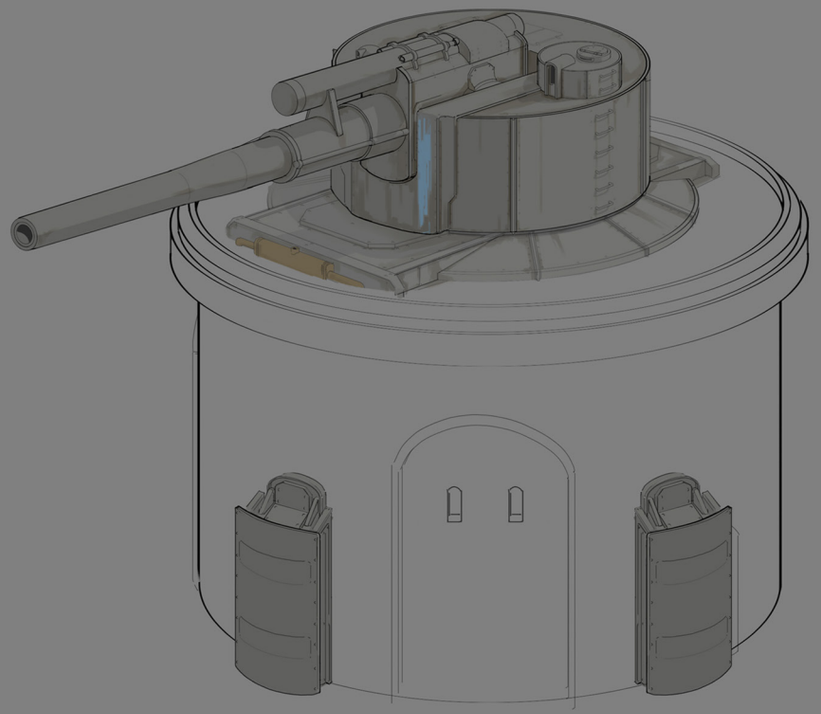

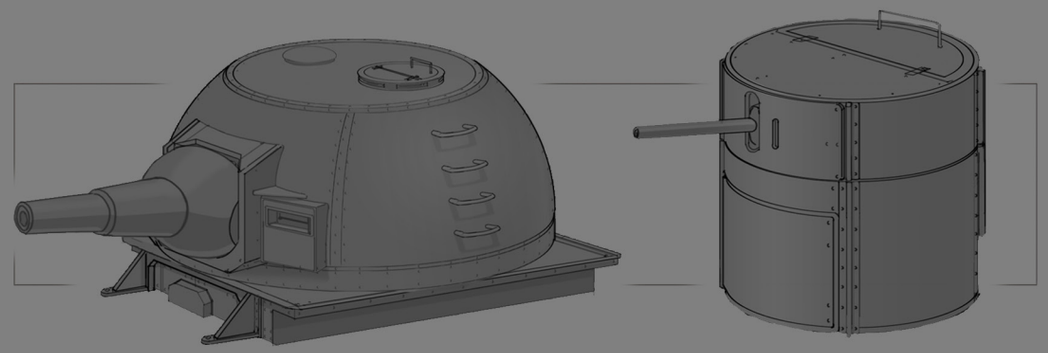

There has always been a desire to model in the armaments lining the Bulwark

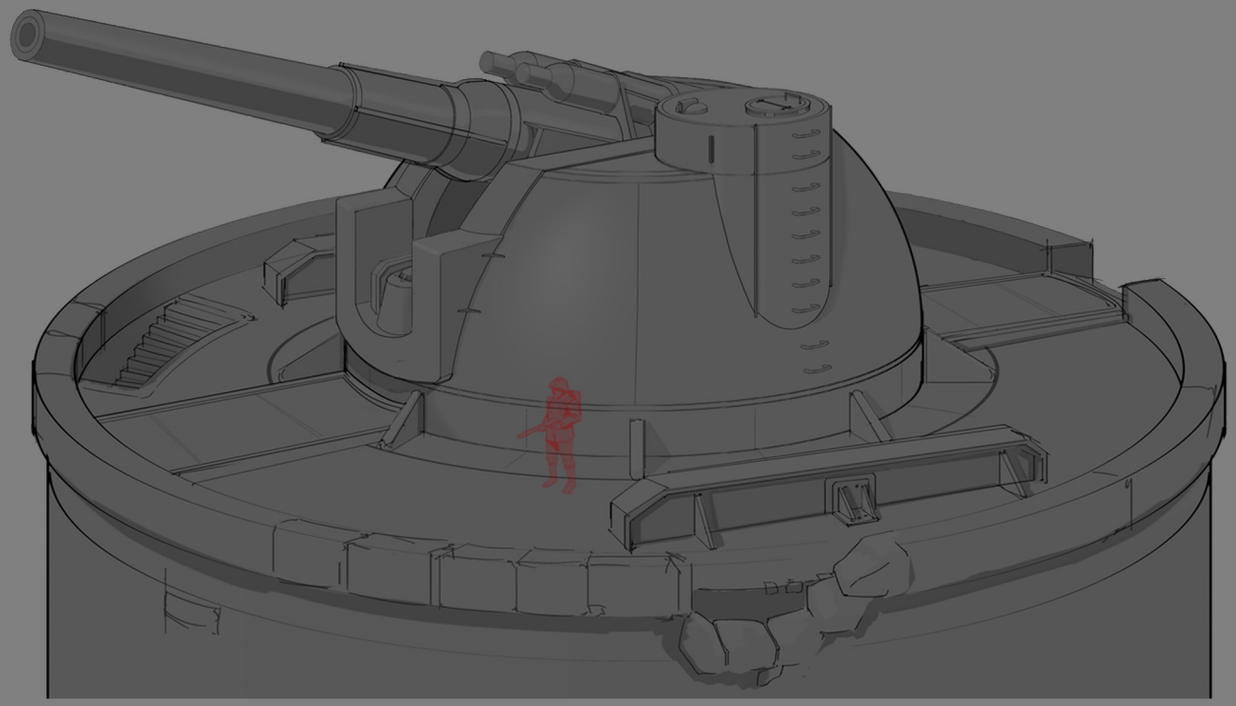

## West Gate Keep

The original vision of the keep was going to have a large historic naval cannon on it. Once, it was infamous for its ability to stop Colonial ships, and also turn to defend against attacks from the land before the Bulwark was breached. To the team, Westgate Keep still feels unfinished. From time to time the idea of finally finishing it comes up, but priority has always been to flesh out all the different theatres of war while expanding the maps and world.

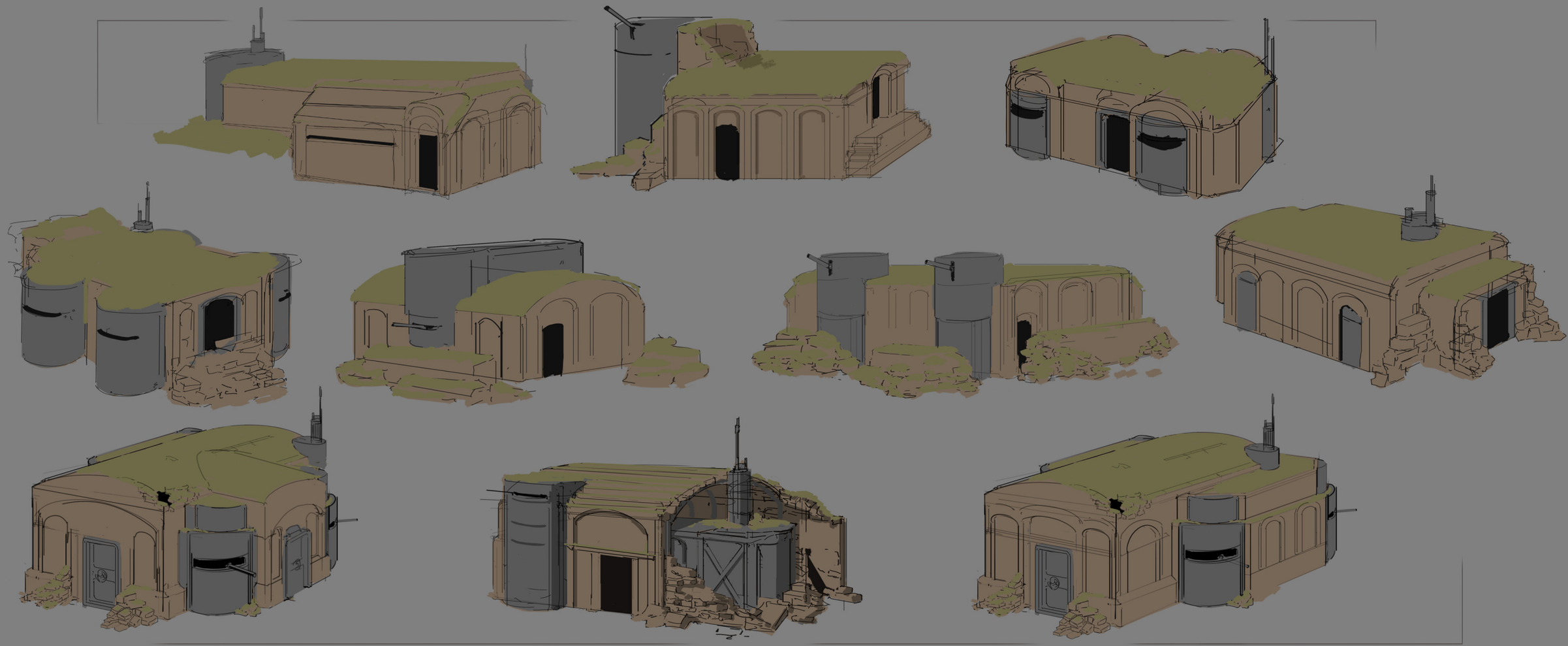

## Relic Bases

Relic bases came later on, when level design needed a world base that was outside of towns and city centres. The idea to develop these as relics from ‘The Great War’ was pitched, and that these were by the same people who built the Bulwark. The term ‘Bulwark Era’ was used to help discuss the idea, and would propagate to other features of the map like the dams and naval cannons along the coasts.

## Relic Base Interiors

There were a few ideas for the relic base interiors that didn't make it into the game. Mortar turrets similar to the Emplacement Houses in towns, and some radio equipment from The Great War that was mysteriously advanced looking. Cellars and more storage options. General upgrades to the bases similar to the safe houses.

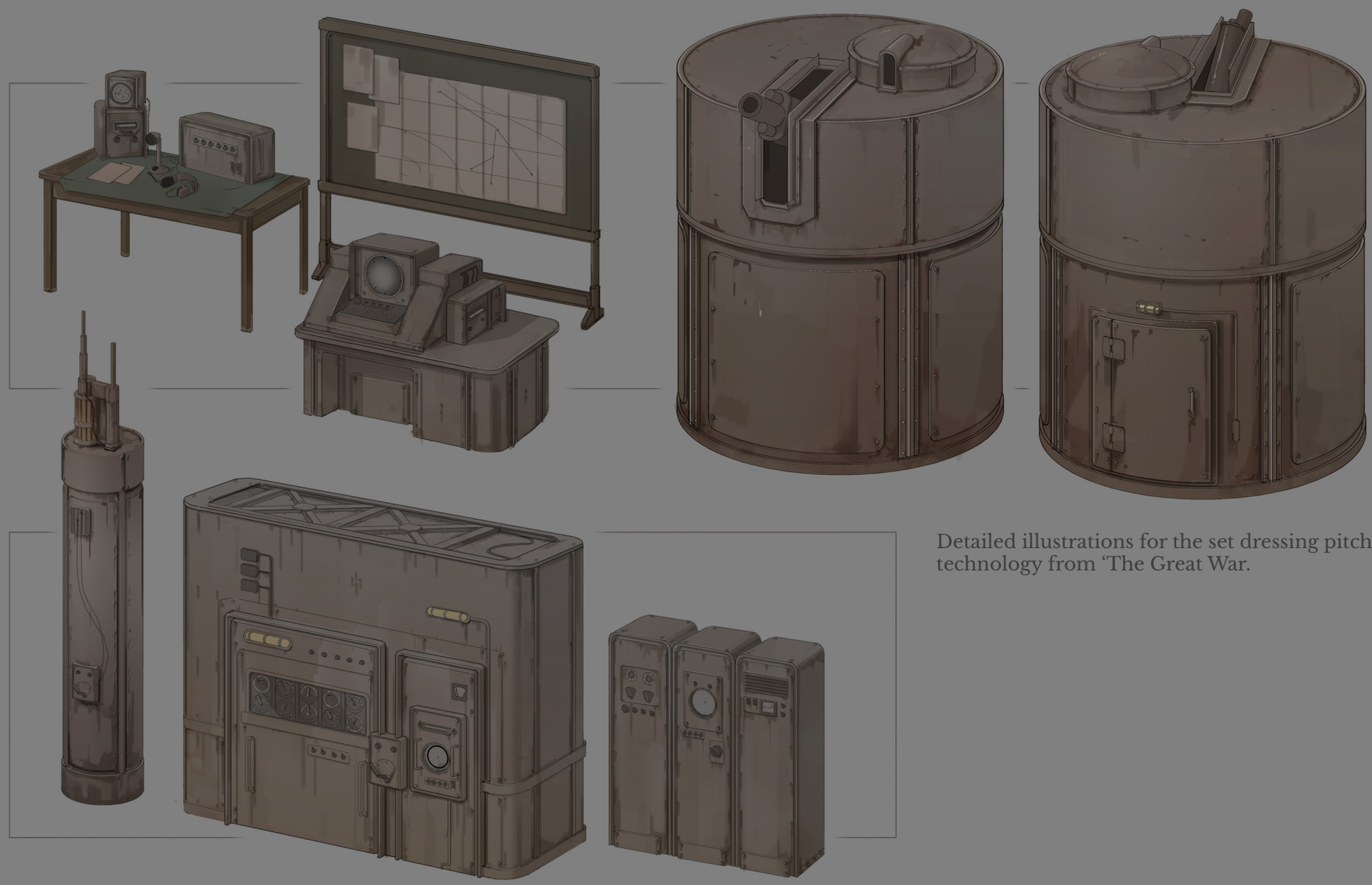

Detailed illustrations for the set dressing pitches of possible lost technology from ‘The Great War.

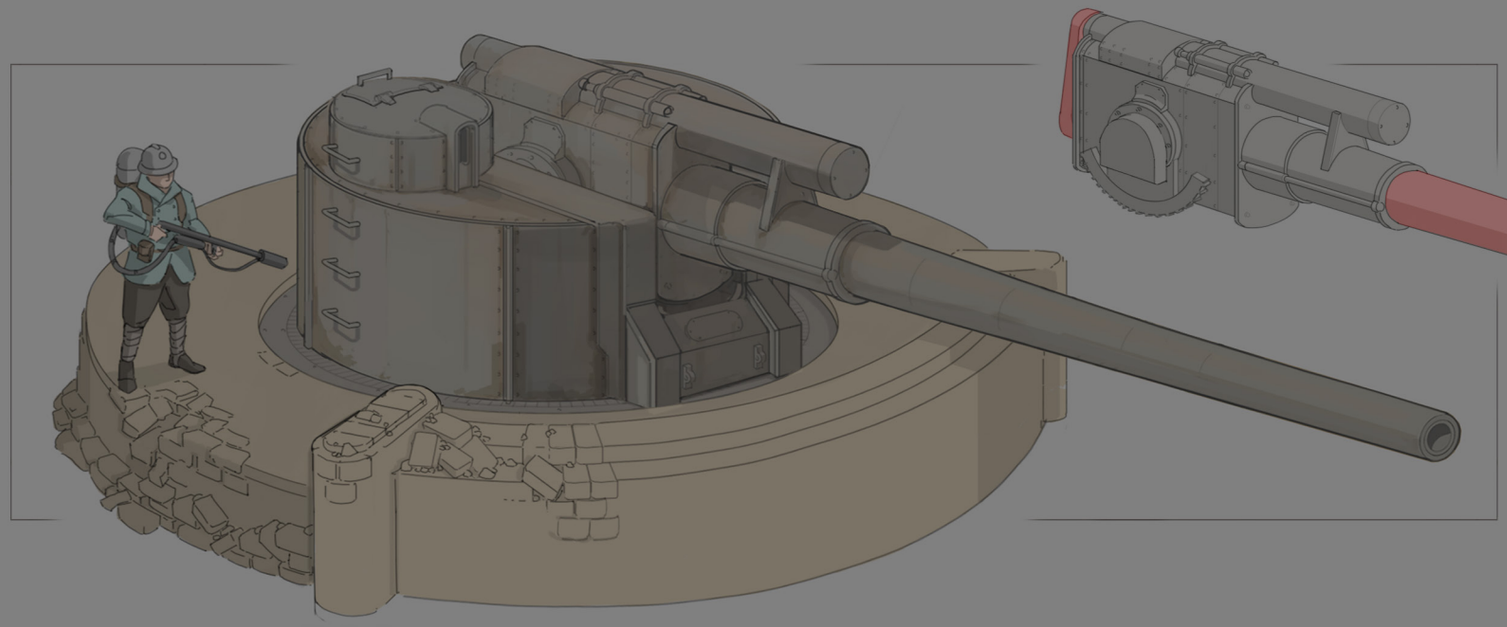

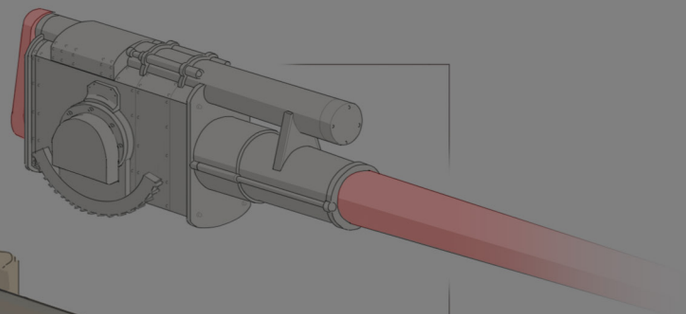

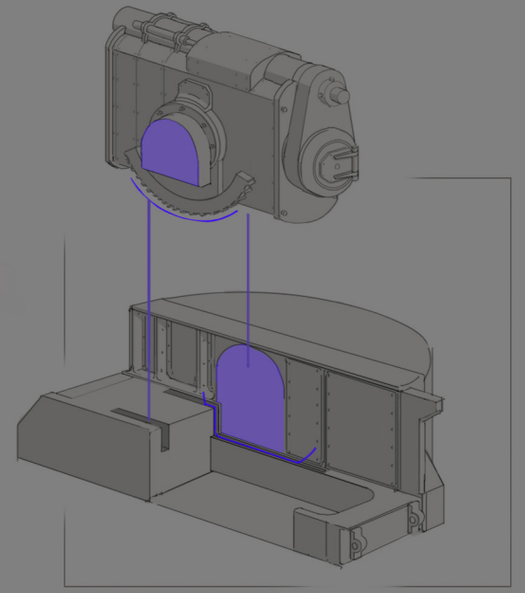

## Naval Cannons

Naval Cannons came much later, and were meant to solve a game-play problem with naval balance. Visually we took the initiative to add to the 'Bulwark Era' look. We wanted to imply that a long time ago, these were part of a grand defensive network. The scale of them started out much larger and the idea of a basement interior was pitched and designed. The idea that you needed to capture them from inside, and the idea that players could man them were pitched. Eventually the size was shrunk when the game designers figured out just how many they would need around the game world.

Clearly Warden in visual language, these were designed before we expanded into Colonial towns. Designing Colonial variants is brought up often.

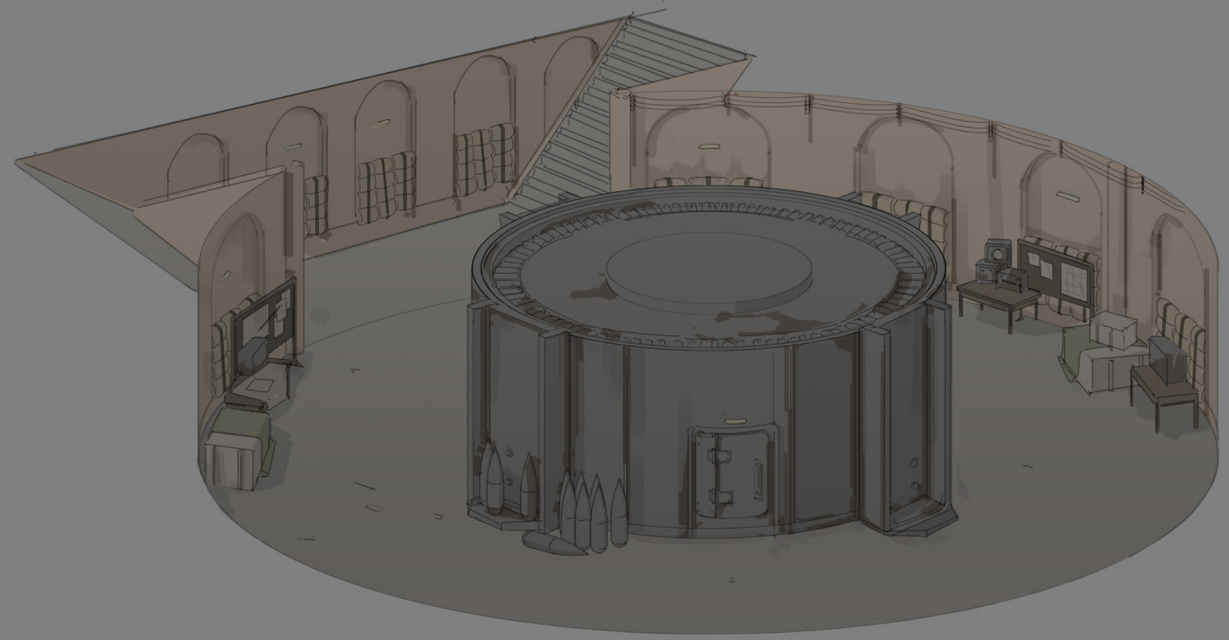

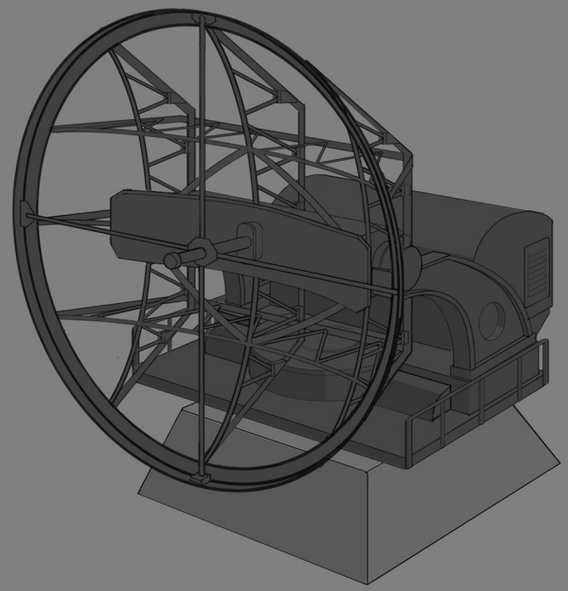

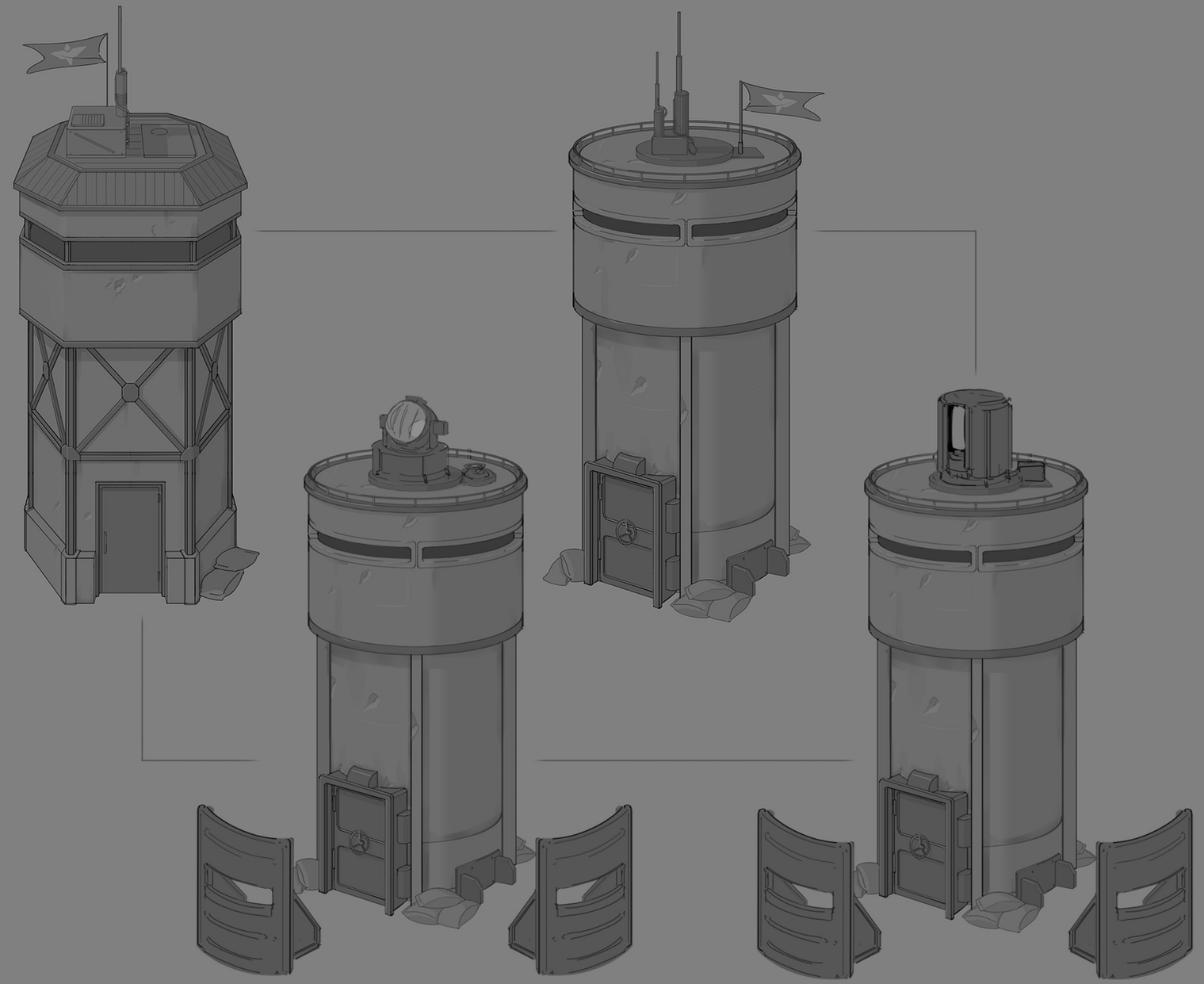

## Observation Towers

Originally pitched as a player-built structure, the model was designed to look like concrete. It was changed to a pre-placed world object. It was too late, but there was a desire to change it to match the ‘Bulwark Era’ design of stone and old metal.

Later, when a radar was needed, one was taken from an old intelligence center concept and shrunk down.

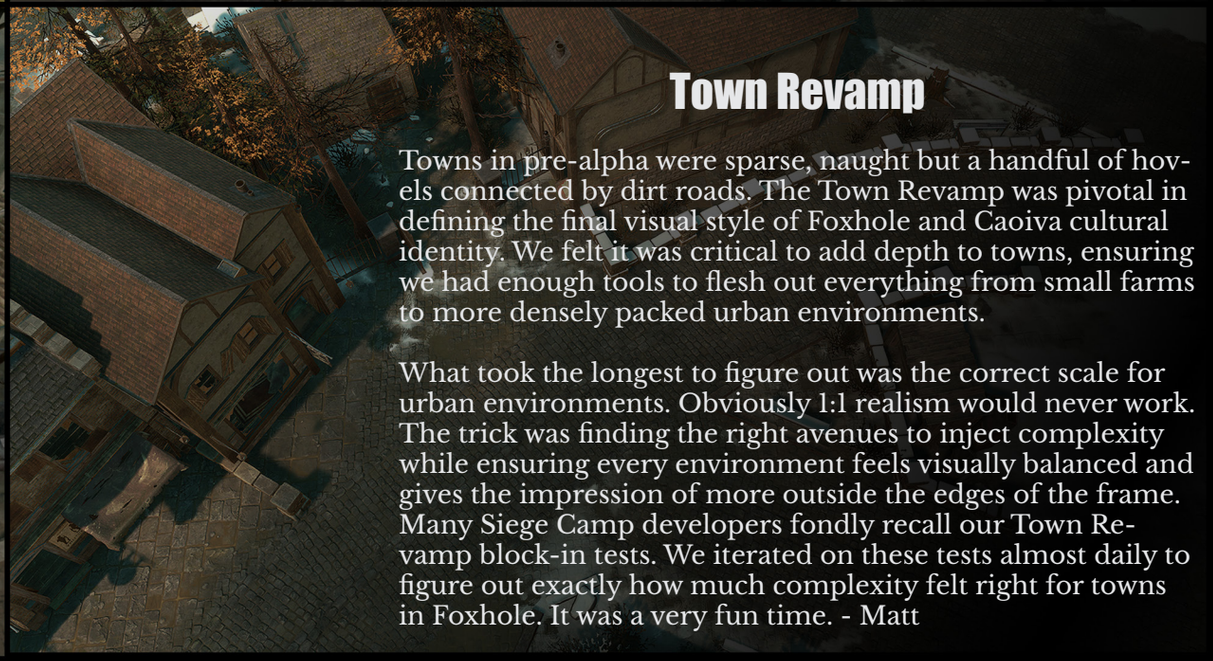

## Town Revamp

Towns in pre-alpha were sparse, naught but a handful of hovels connected by dirt roads. The Town Revamp was pivotal in defining the final visual style of Foxhole and Caoiva cultural identity. We felt it was critical to add depth to towns, ensuring we had enough tools to flesh out everything from small farms to more densely packed urban environments.

What took the longest to figure out was the correct scale for urban environments. Obviously 1:1 realism would never work. The trick was finding the right avenues to inject complexity while ensuring every environment feels visually balanced and gives the impression of more outside the edges of the frame. Many Siege Camp developers fondly recall our Town Revamp block-in tests. We iterated on these tests almost daily to figure out exactly how much complexity felt right for towns in Foxhole. It was a very fun time. - Matt

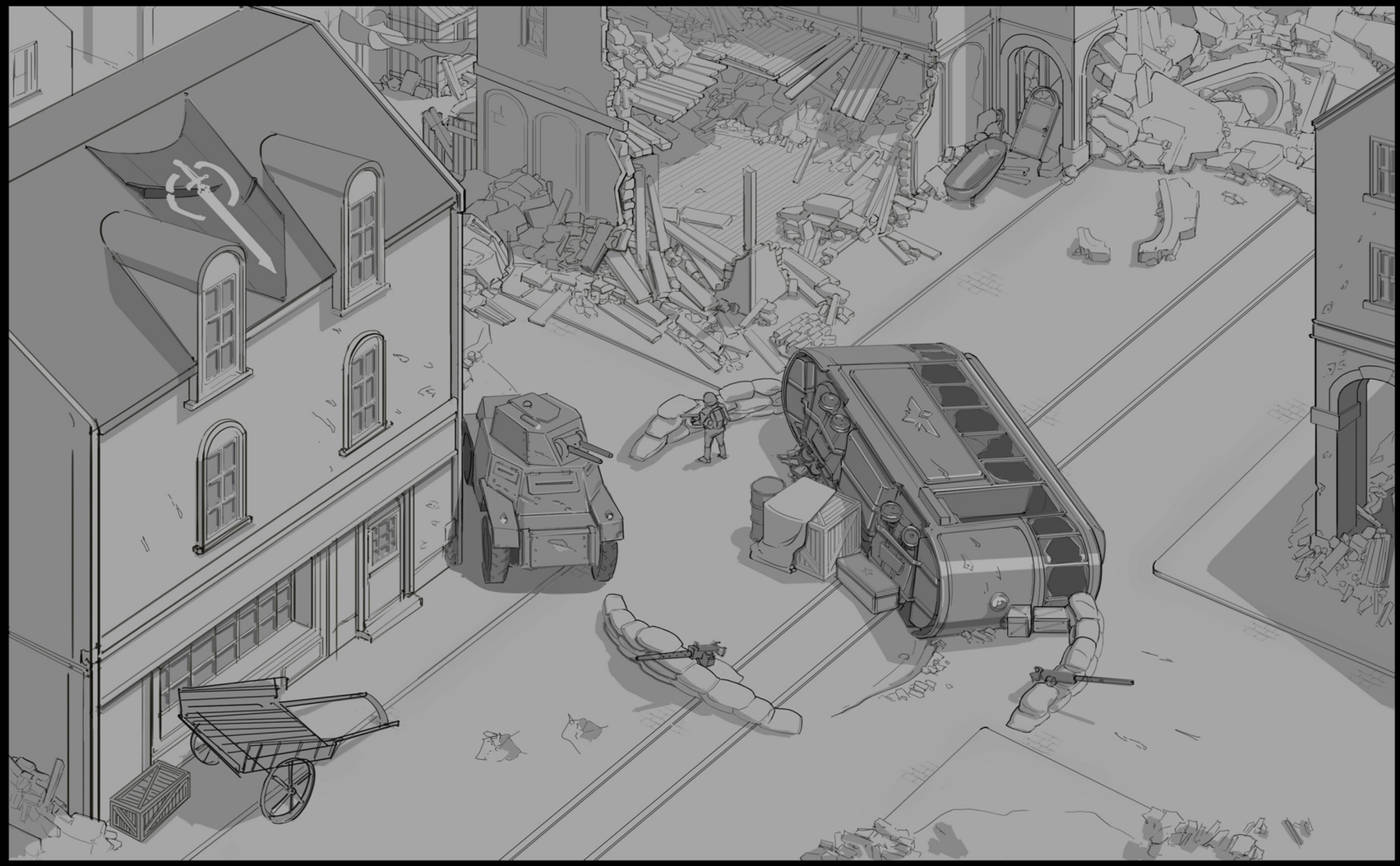

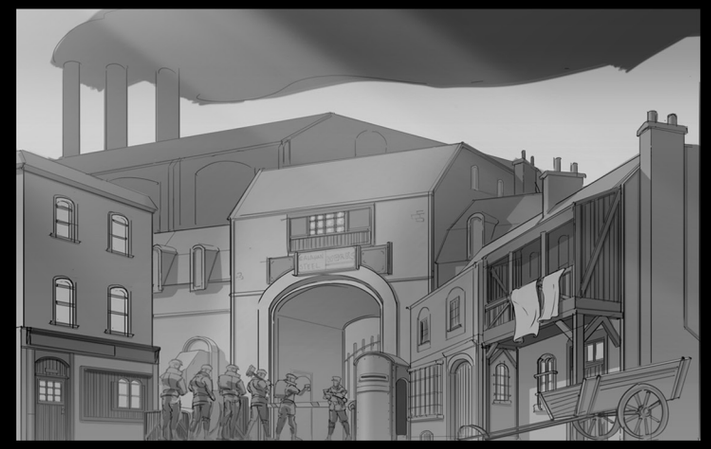

## Town Revamp Mood Art

At the very beginning of the town revamp project, a number of drawings were developed to give an impression of what city combat might feel like. Mixed in was the development of what the towns would have looked and felt like before The Great War when Caoiva was a land full of life and industry.

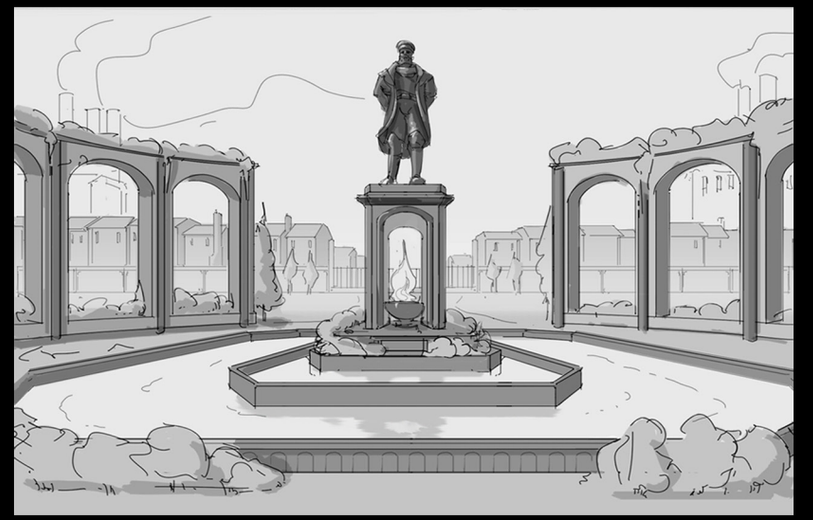

These drawings were meant to inspire ideas and generate questions for the team, and to bring life to the towns we were rebuilding. It was a particularly fun task to work on. - Julian

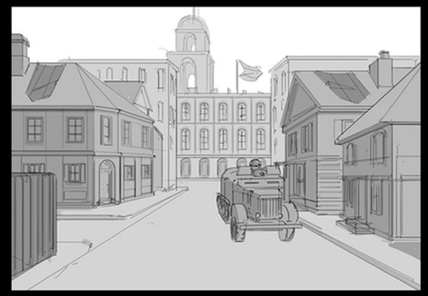

## Town Revamp Paint Overs.

After the ideation and sketches were complete, the next step was a set of quick in game screenshot paint overs. These were simple paintings to match the lighting engine and let the team visualize the direction the revamp was headed. This was very early in development, for the town revamp, and block-in models were made. The plan was to expand the assets available for the level designers to give the world of Foxhole its personality.

At the time, with an art team of about five people, the world only consisted of Warden towns. The possibility to design for the Colonials didn't come till a few years later.

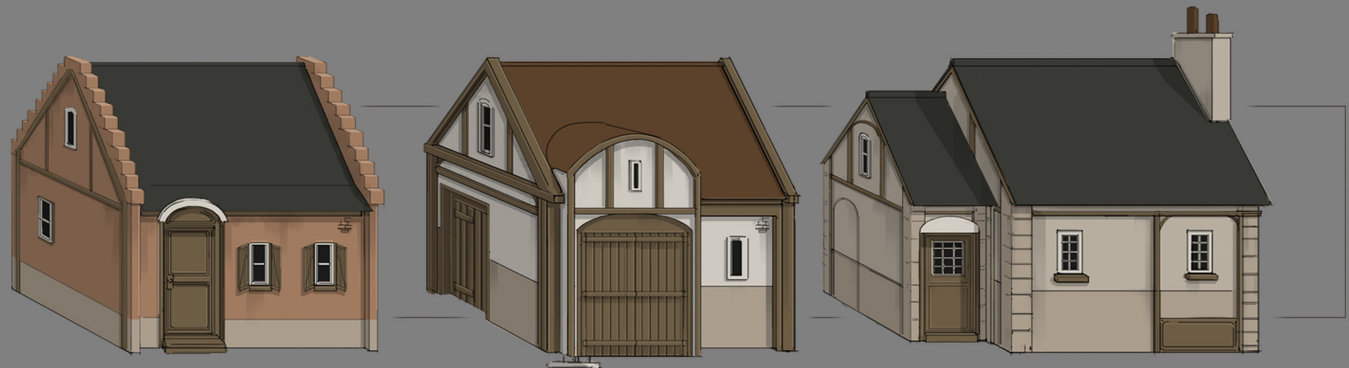

A large number of house types were created. The idea was to create as many as we could and then let the modeler and level designer build the ones needed.

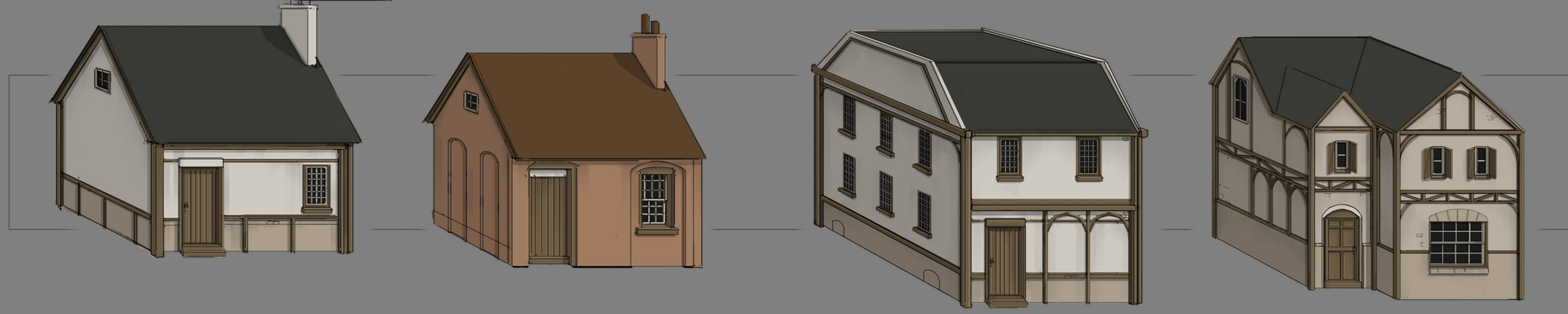

There was a short list of types of houses created: Small, Medium ‘line house’, Medium ‘stand alone’, large and what came to be known as a safe house.

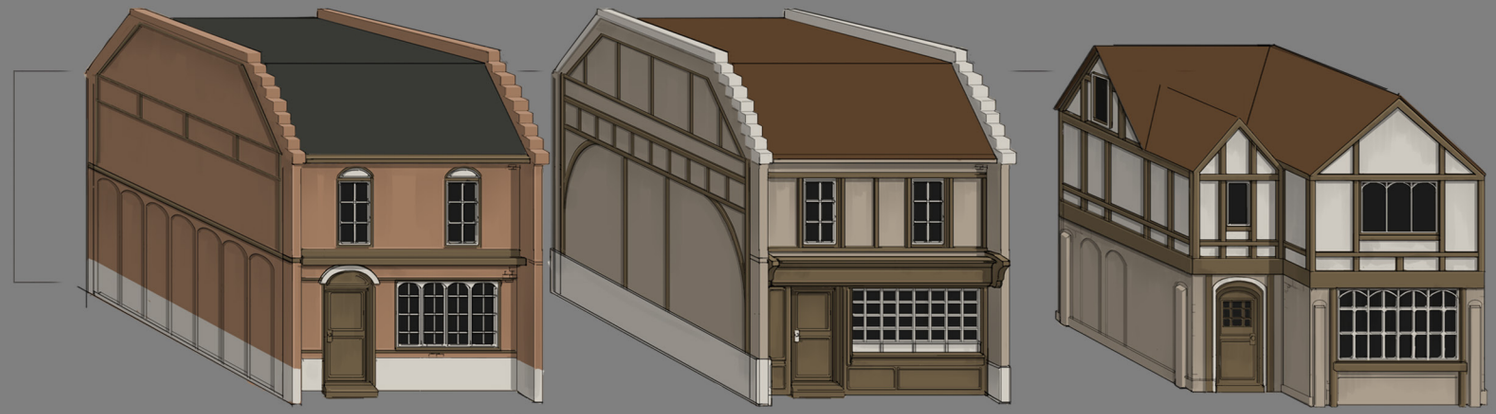

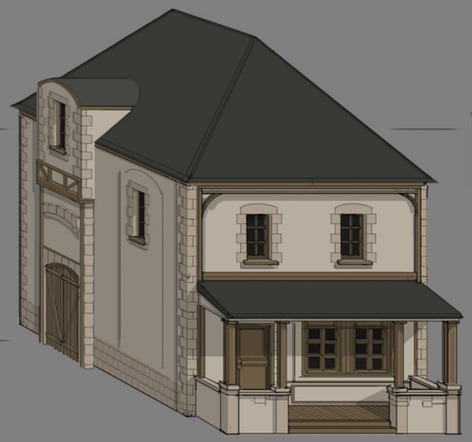

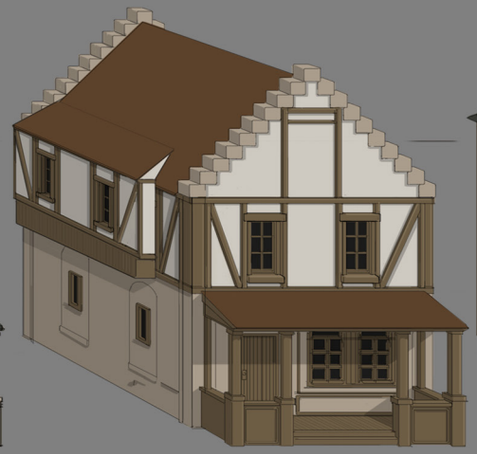

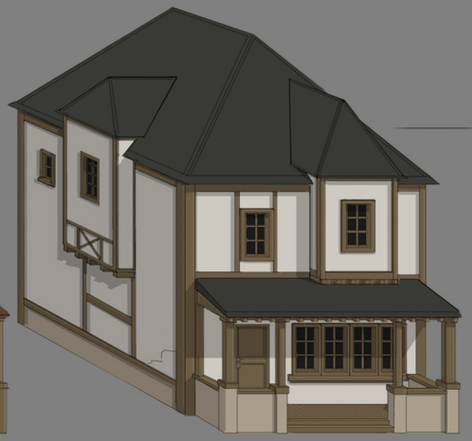

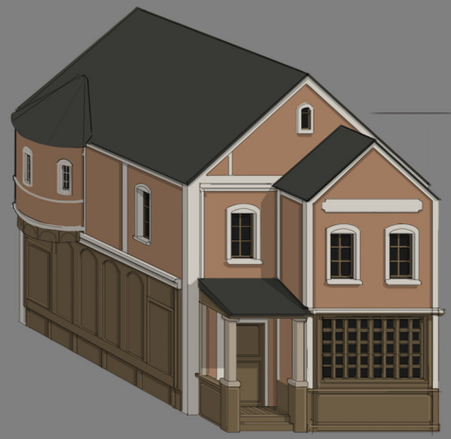

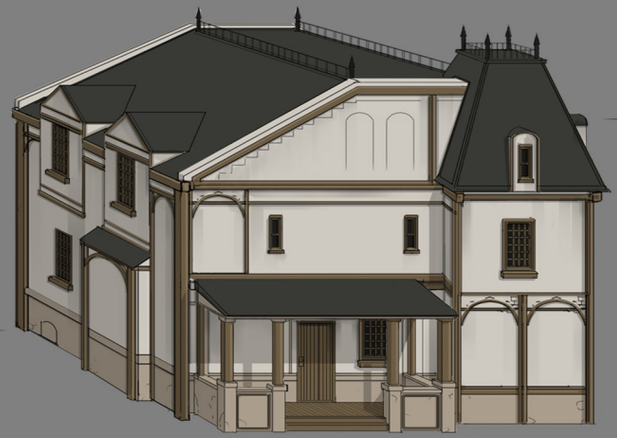

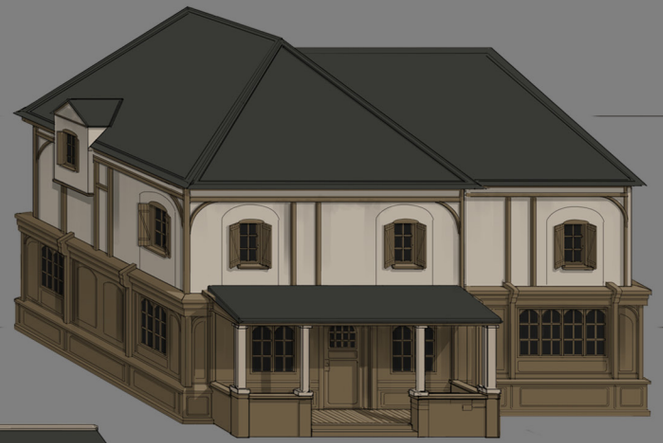

A number of different visual features were tried. Something that stood out for the large houses was a more American style front porch on a more European facade.

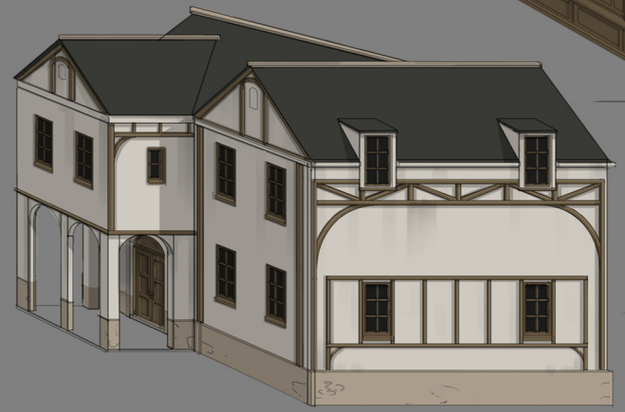

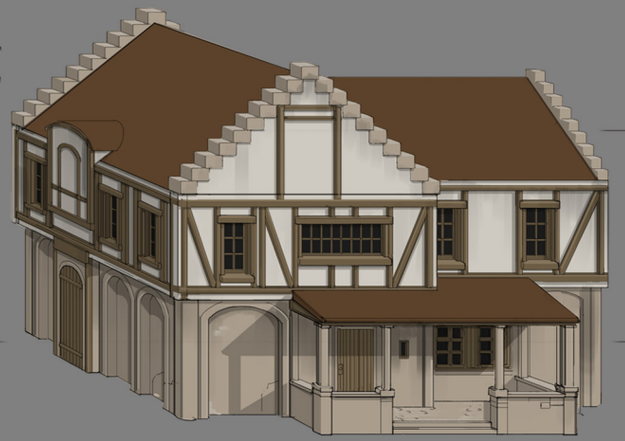

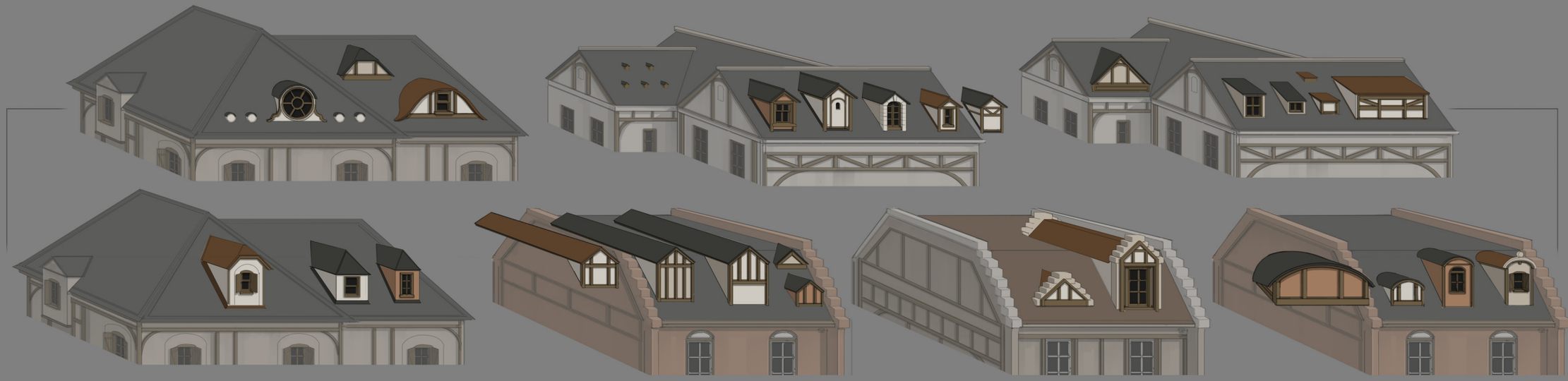

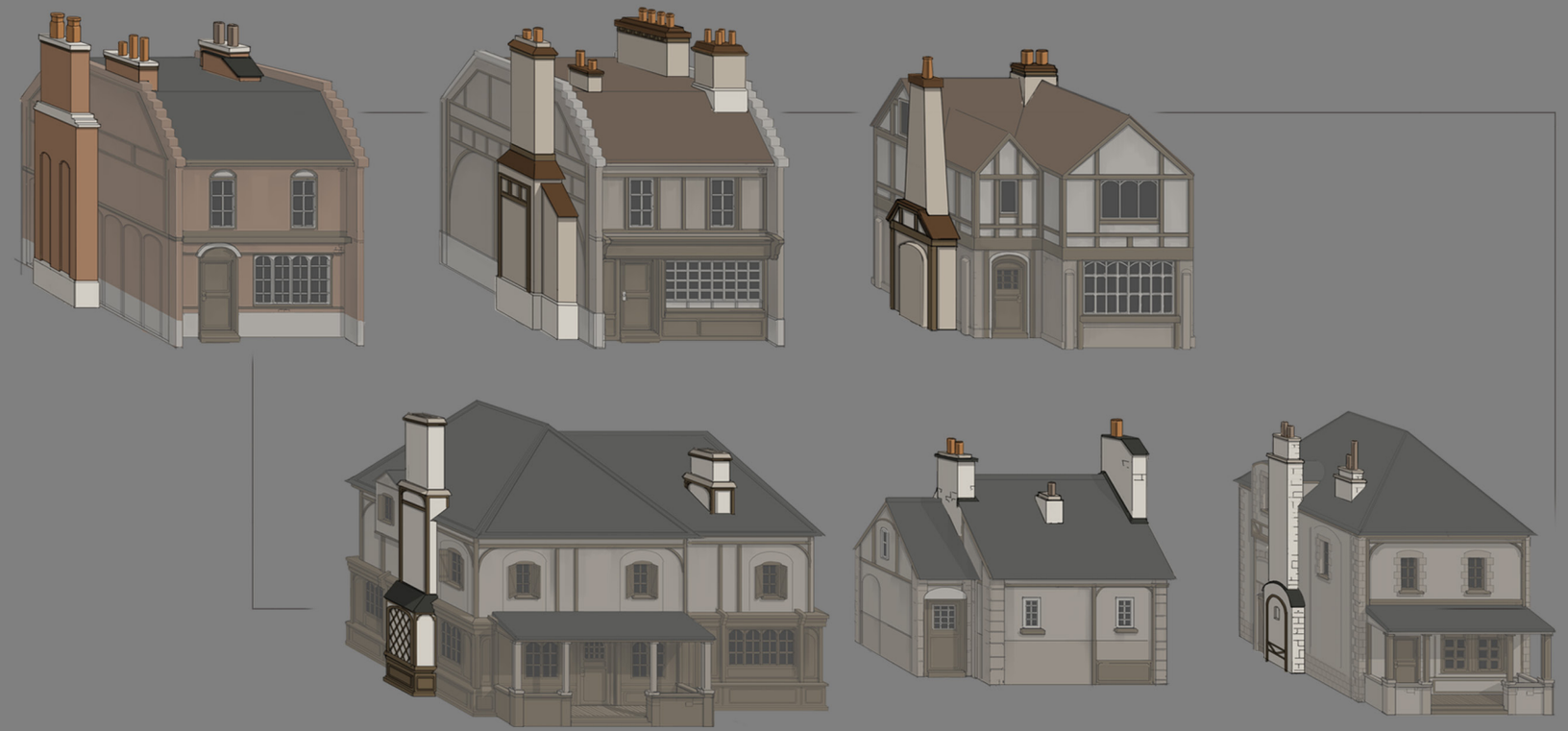

At this point we knew that the roofs were going to be key. As we worked on the feature we struggled with the screen space that roofs take up. We learned by trial and error how to design a roof that didn't grab attention, but wasn't boring either. For variety, a number of additional chimneys and windows were concepted out.

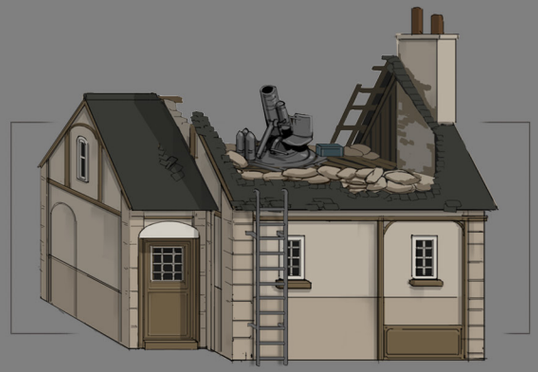

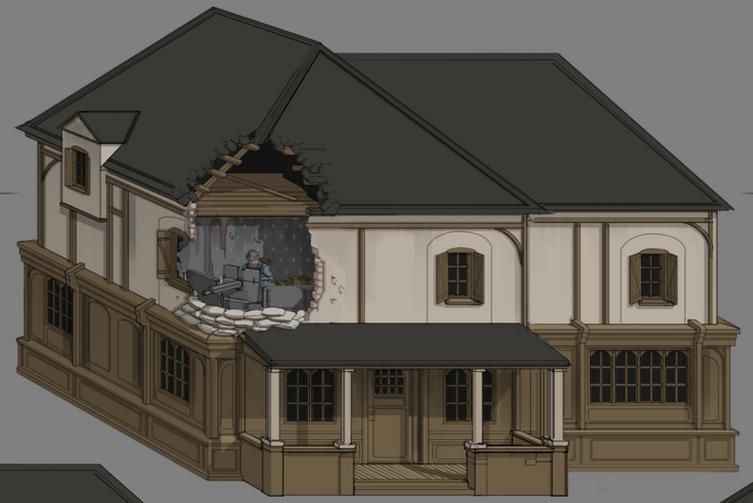

The first ideas explored involved upgradable or deployable areas for weapons. The Mortar Houses in towns are the end result of what we could achieve at the time.

Emplacement Houseand Safe Houses have evolved over the years but the interior designs helped inform the rest of the houses in the town revamp.

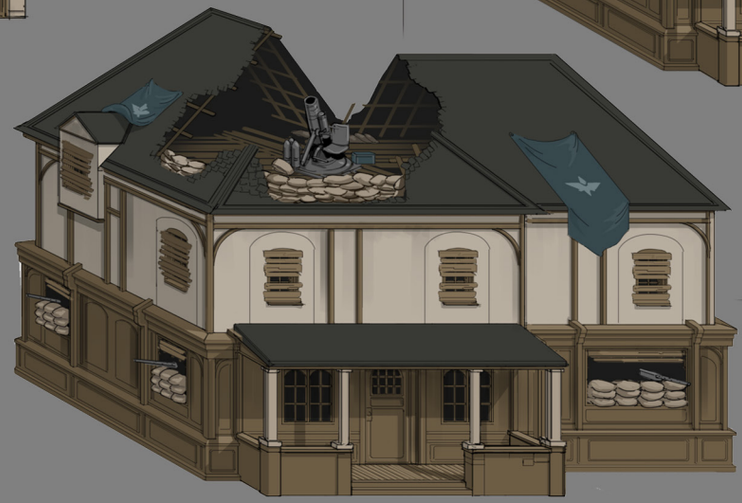

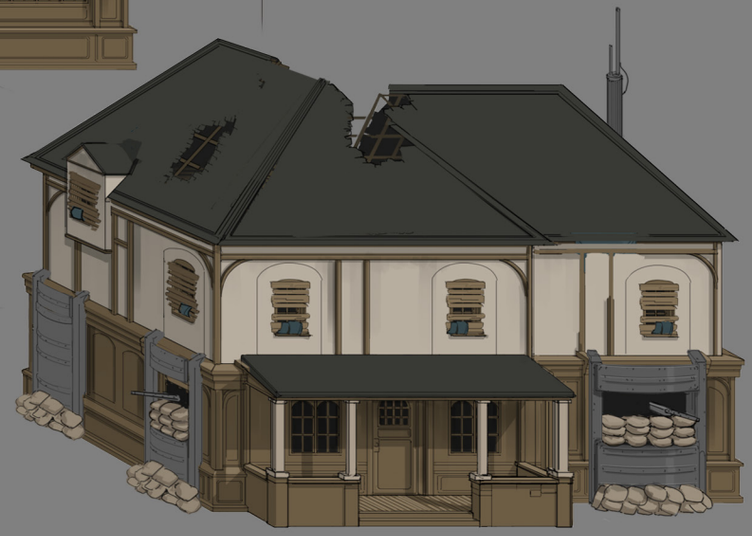

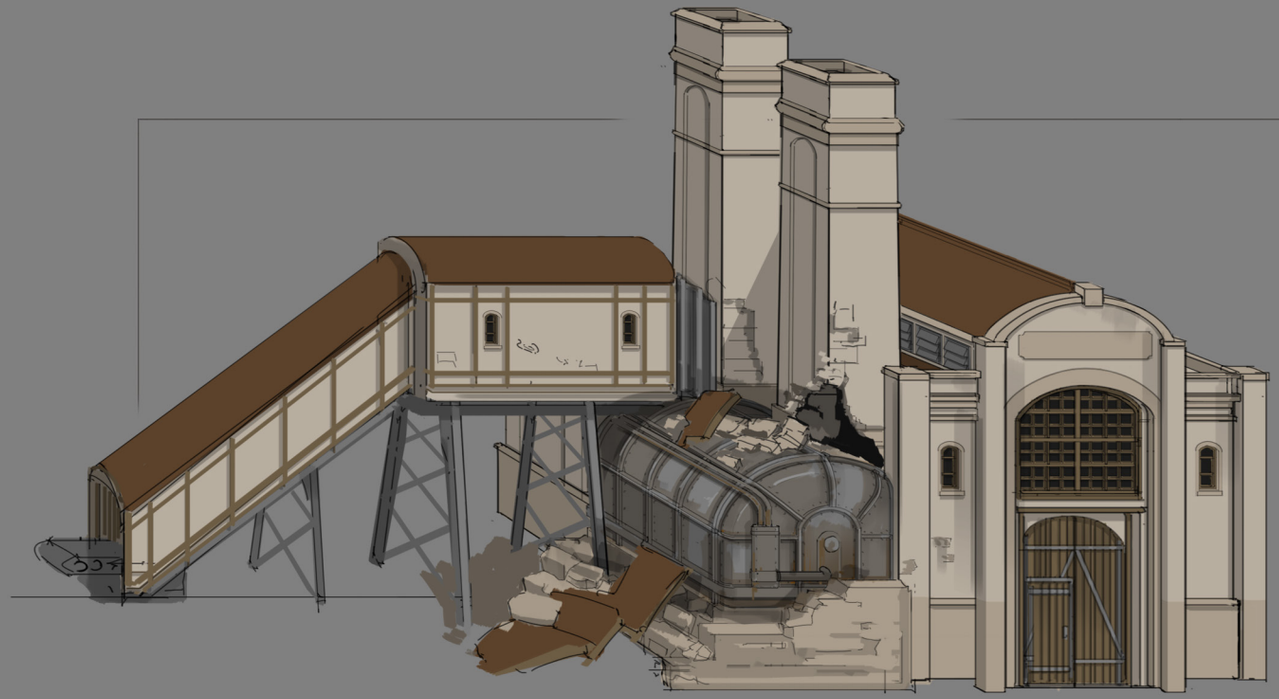

A mini project at the time called ‘Unique Buildings’ brought a couple of larger buildings which could appear in a few towns around the map, like an abandoned coal power plant. They could not be bespoke one offs brimming with detail, but needed to blend in.

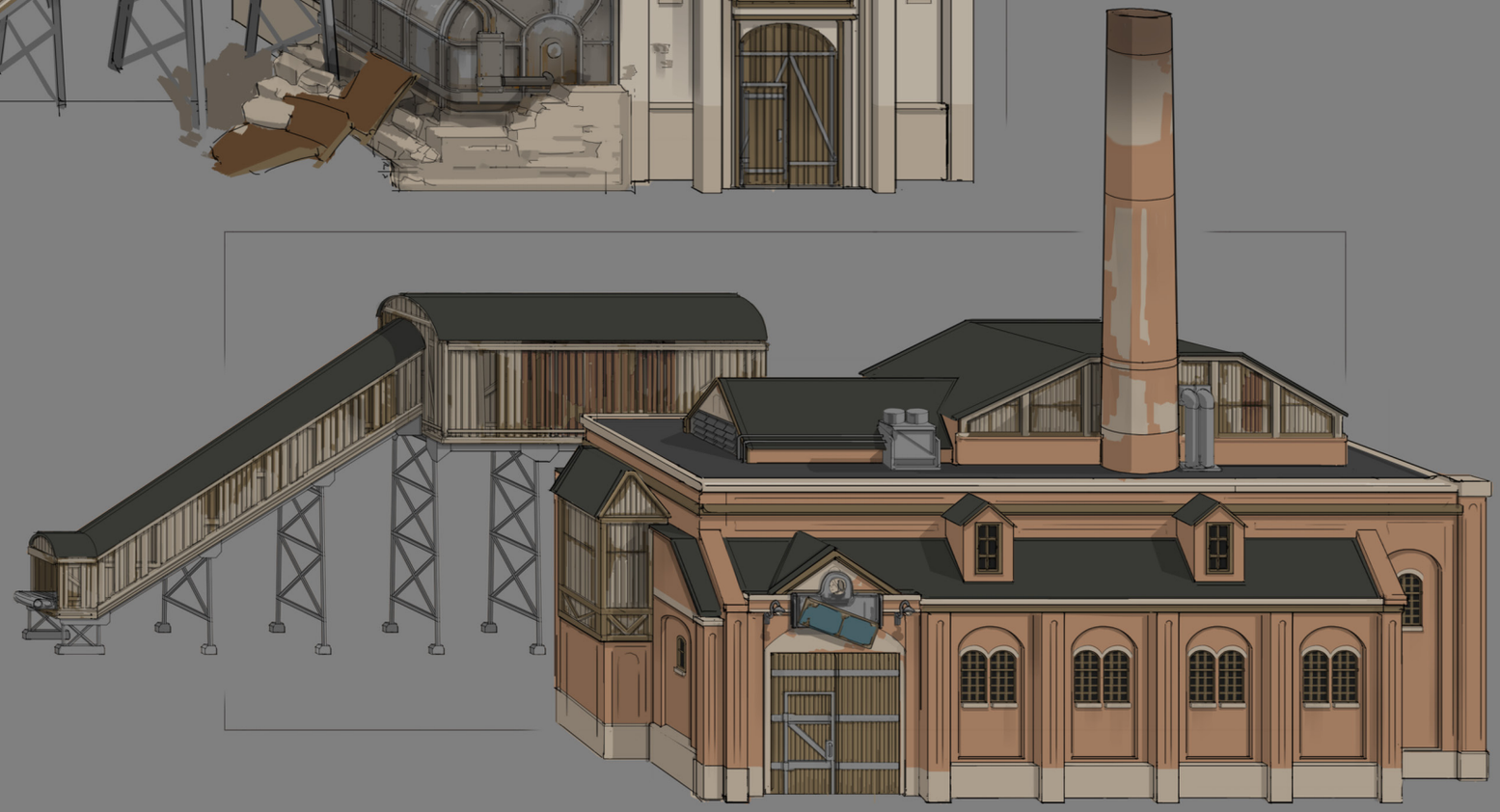

One of the designs was adapted to become the Mass Production Factory later in development.

The Mass Production Factory was an alteration of an abandoned building. The visual alteration for it just cleaned it up and applied some details from the existing factories that players were already used to.

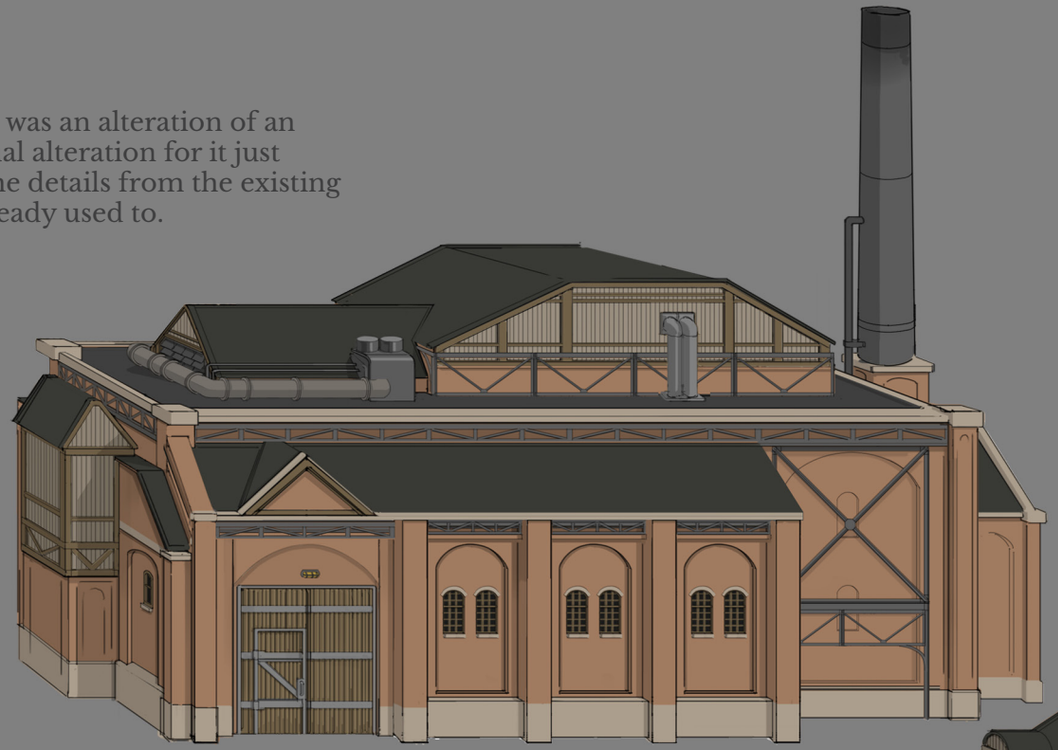

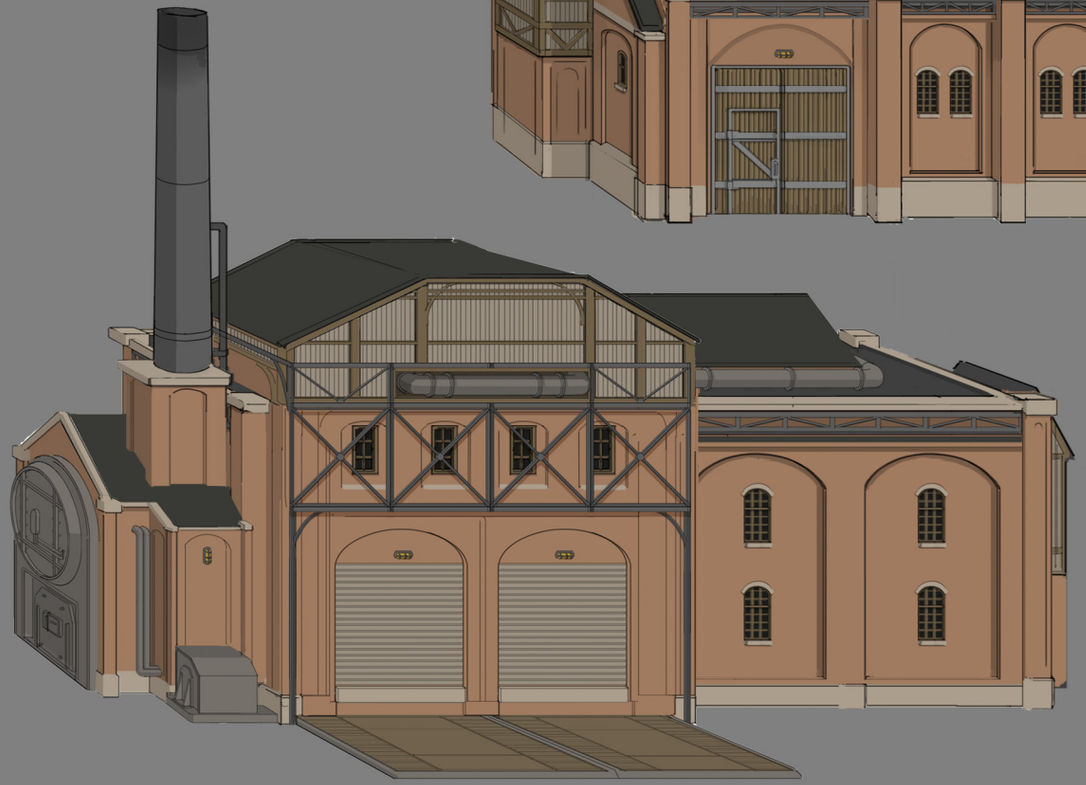

A few other details were developed like pipes and silos for use around towns as set dressing.

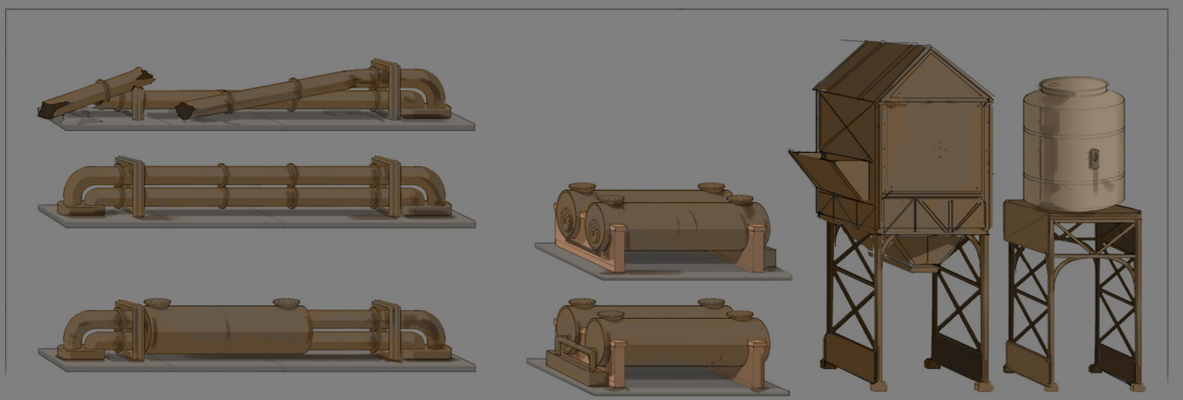

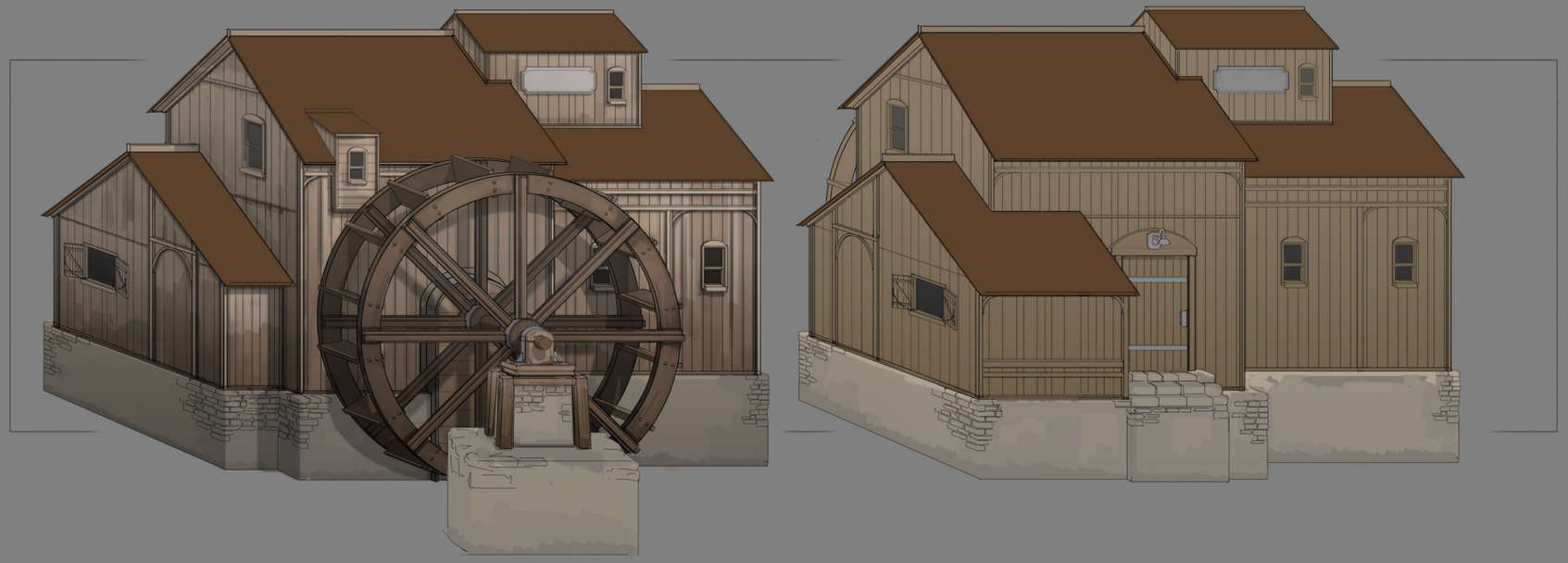

A windmill, train station, and watermill were the other buildings designed in the ‘Unique Building’ mini project.

Each just meant to help out different areas of the map not feel so repetitive at the time.

A green house concept was also created but lost in a hard drive crash. The model is in a few towns in the game.

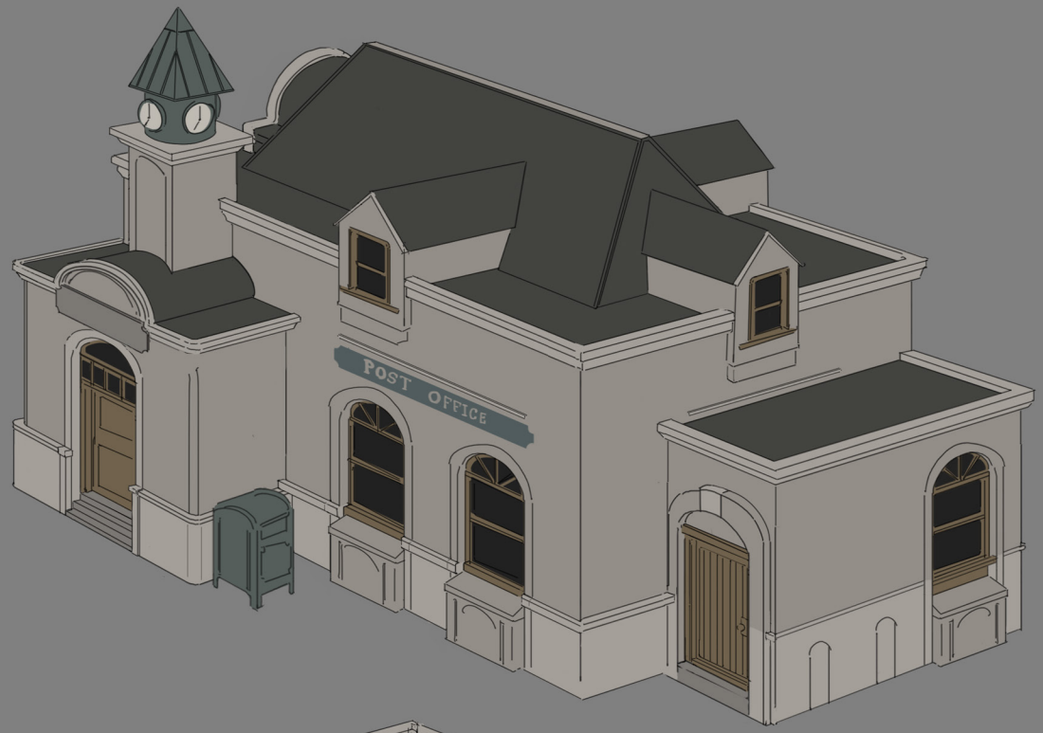


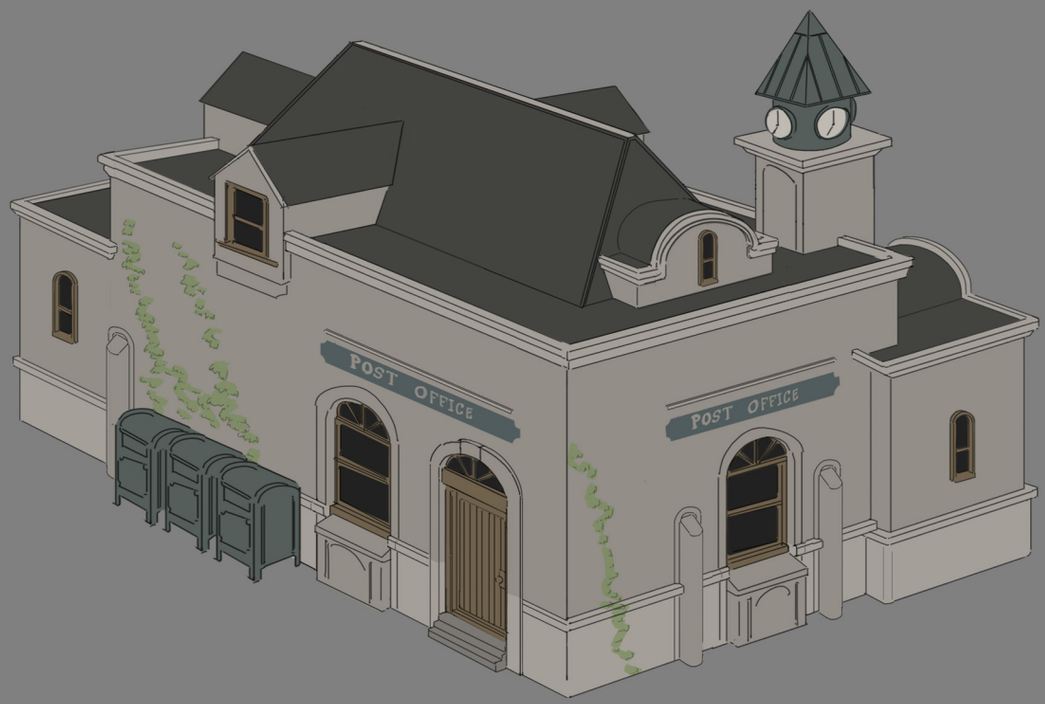


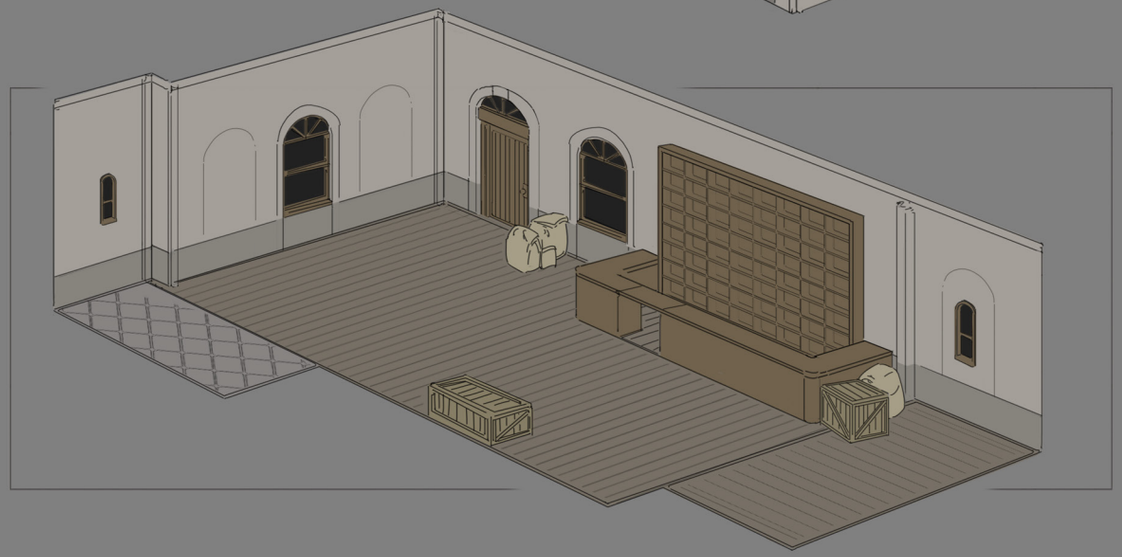

Later on we got the chance to revisit the towns and design new town halls. At the time, they were the oldest assets in each town, and didn't have interiors yet. Level design wanted as many different structures as they could get in order to vary the victory points in the map. The first was a post office.  A clock was placed on all the new town centers as a small visual theme.

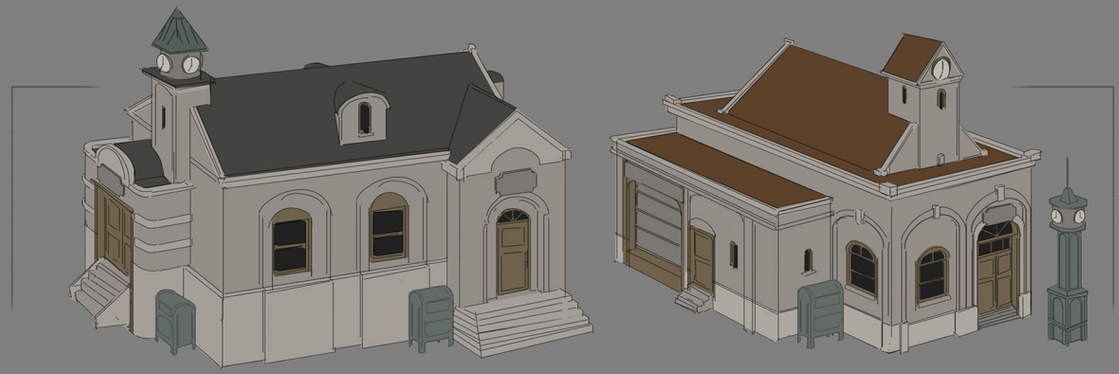

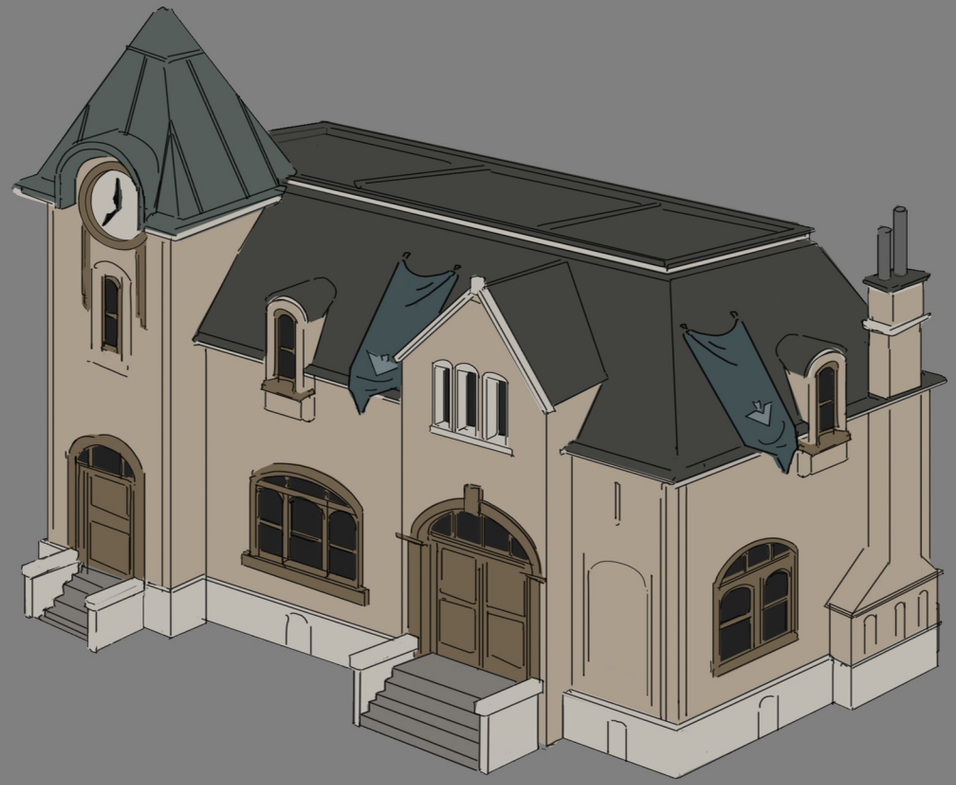

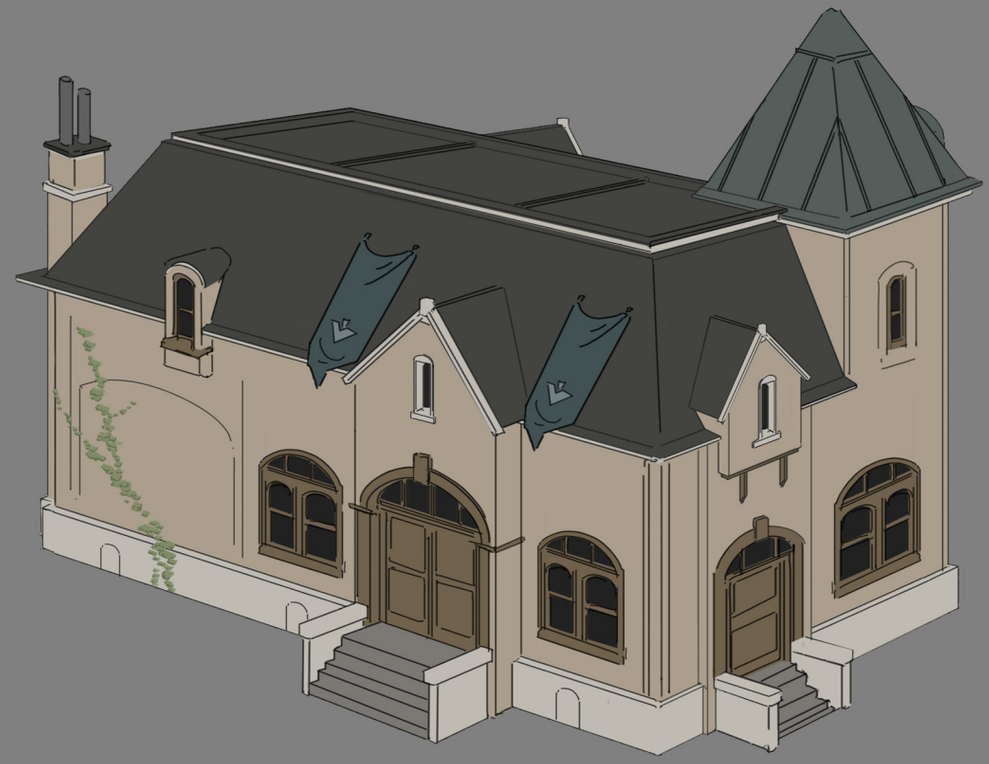

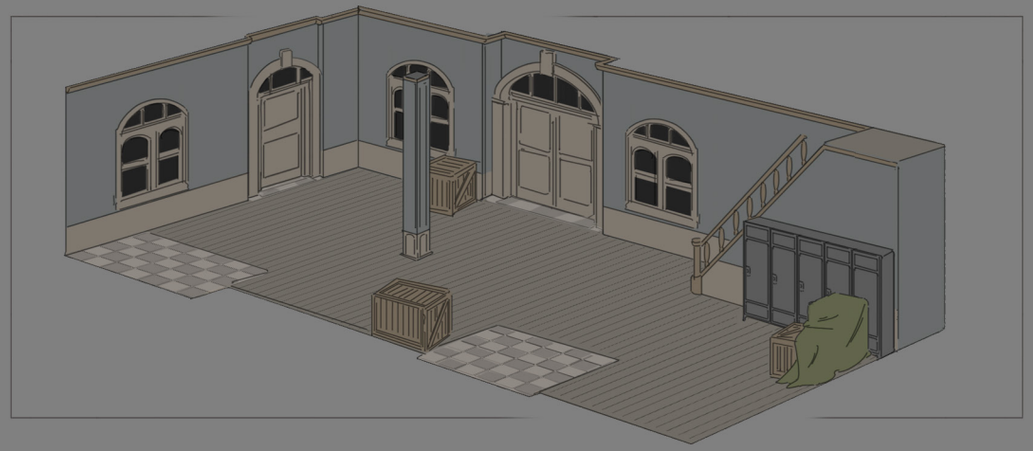

A school was also pitched for something a small town would have at its center. The interior space was limited and we needed to abstract the idea of what a school would look like.

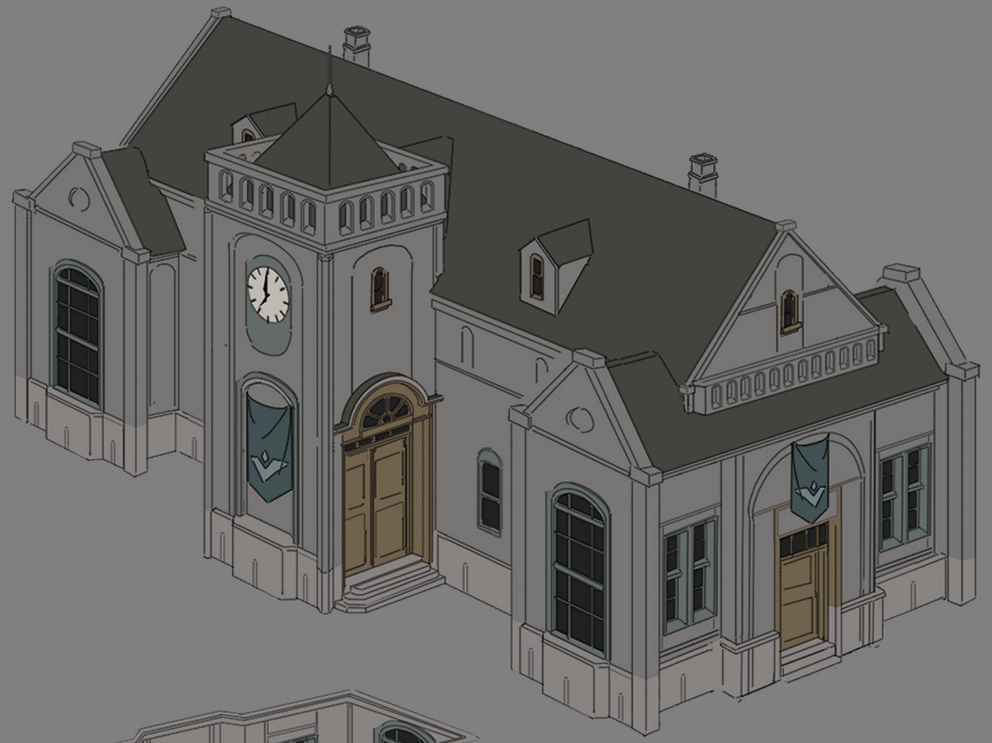

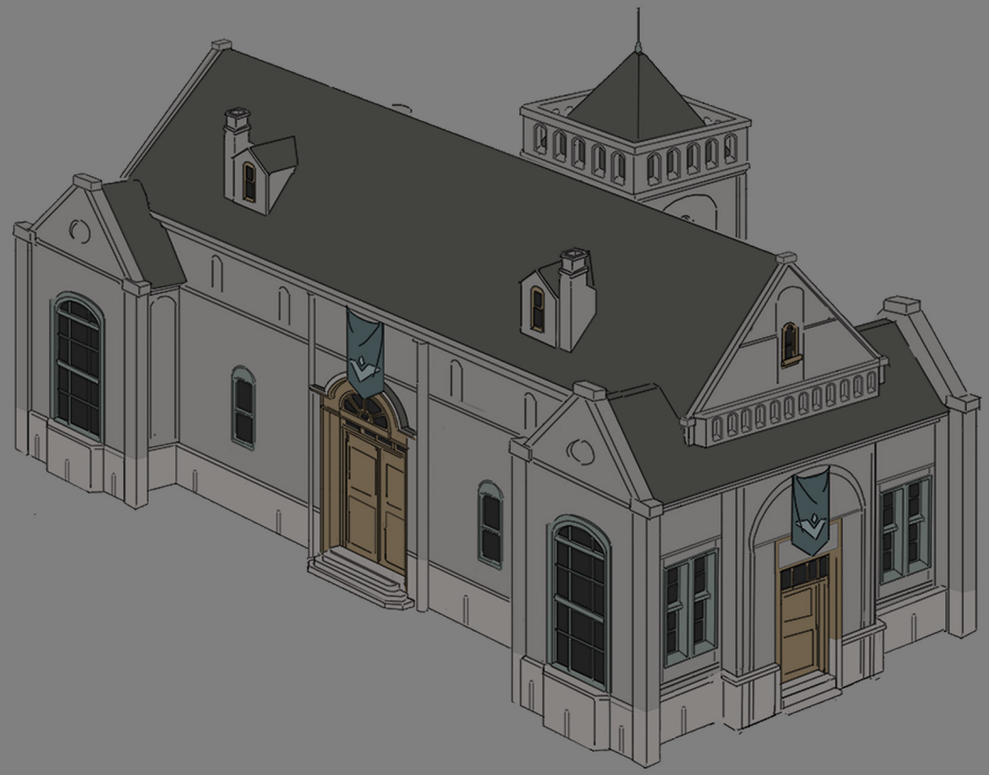

For bigger towns like the Abandoned Ward in the Deadlands a full town center was redesigned. We wanted set dressing inside all the town halls but we also needed as much floor space as we could make for players to spawn in.

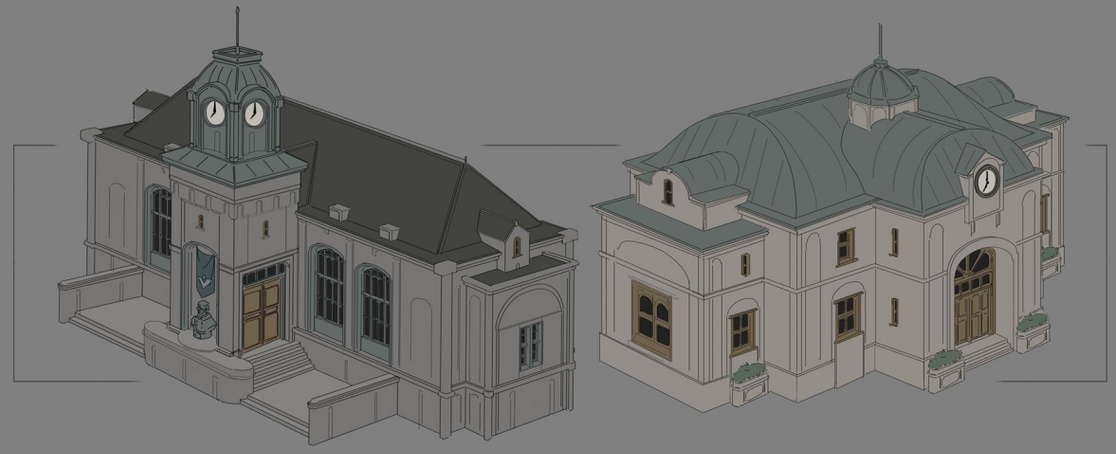

*Unused town hall design*

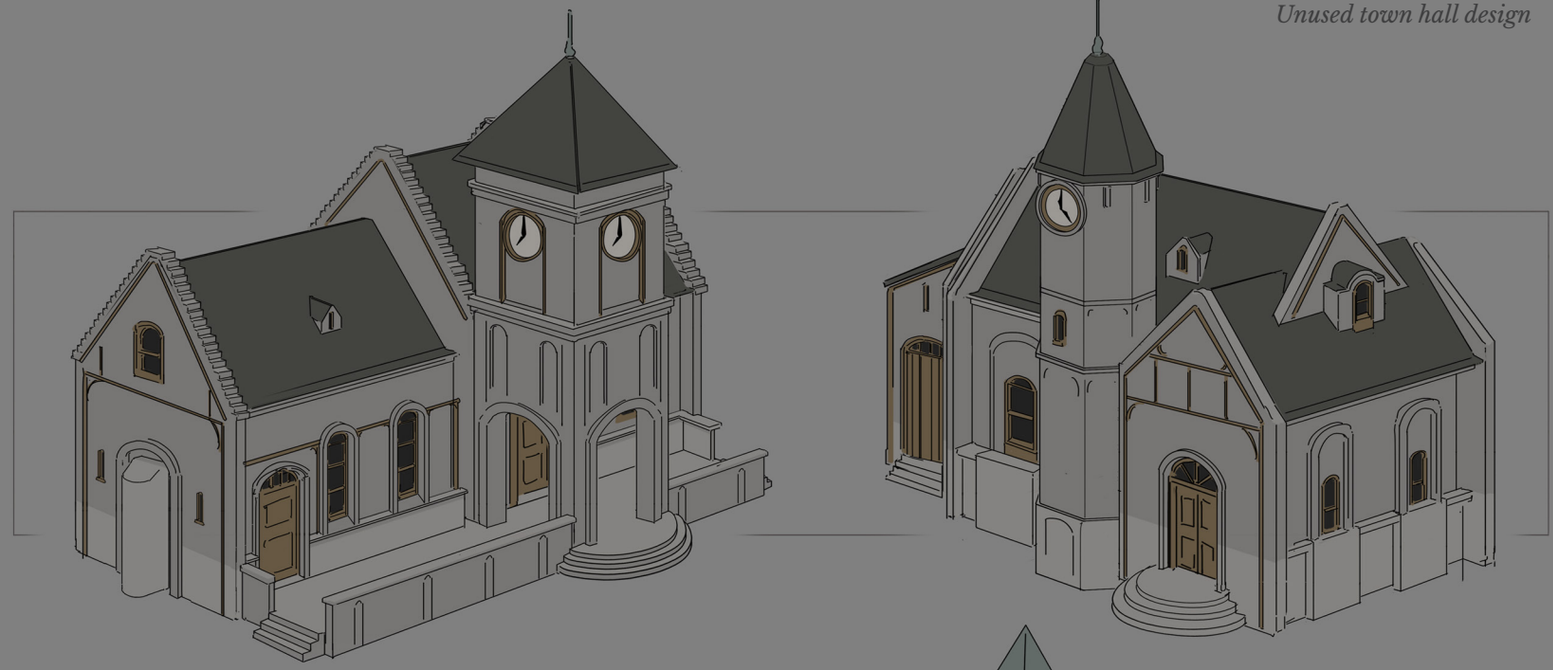

## Why sunflowers

The town hall redesign was actually inspired by a happy accident. Due to the Town Revamp, I was badly in need of a church asset. We didn't have time to concept it, so along with another artist, we kitbashed a quick and dirty block-in that worked great... Except I didn't want to include Catholic crosses for obvious lore reasons.

Early on, we only really had one flower model that got spread all over to add variety and extra detail to set dressing. It turned out to be sunflowers.
We made an 11th-hour call to elevate the sunflower as a Caoivish religious symbol. It turned out to be a very interesting solution that cracked open many new worldbuilding avenues. Especially considering how important the sun is to the Caoiva.

It wound up being a great illustration for how limitations breed creativity. Once we circled back around to modernize Town Halls, we started by thinking of using churches to make use of their visual profile. We opted for a more nuanced approach in the end, but it's always fun looking back at how you arrive at certain results. - Matt

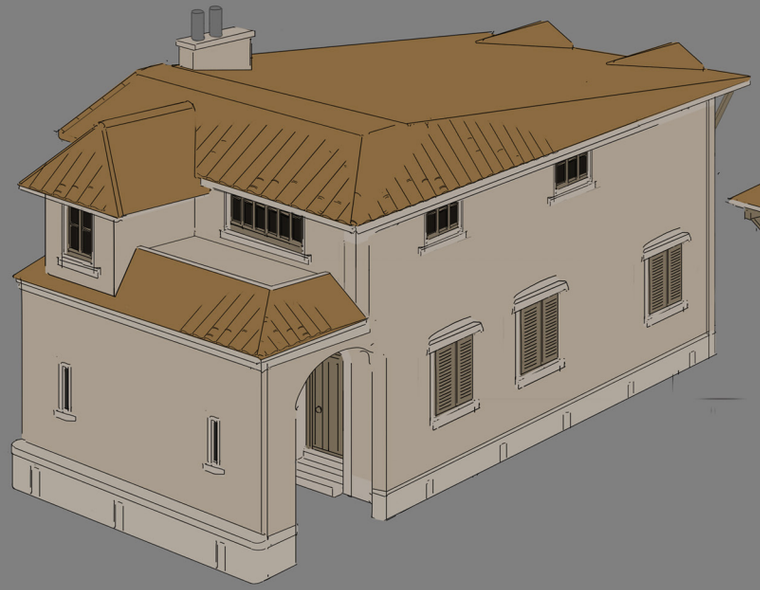

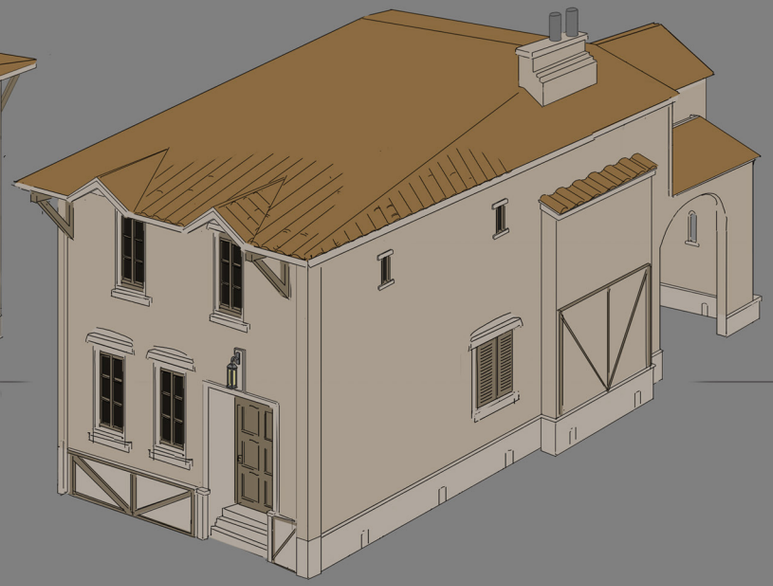

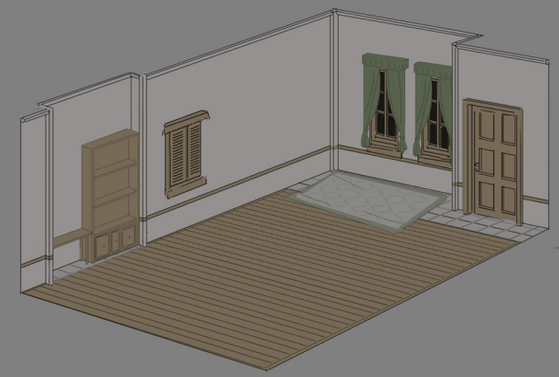

We also had the chance to design Colonial towns for the first time. The world map was expanding south, and though not as expansive as the first town revamp, we really optimised the time we had to work on them.

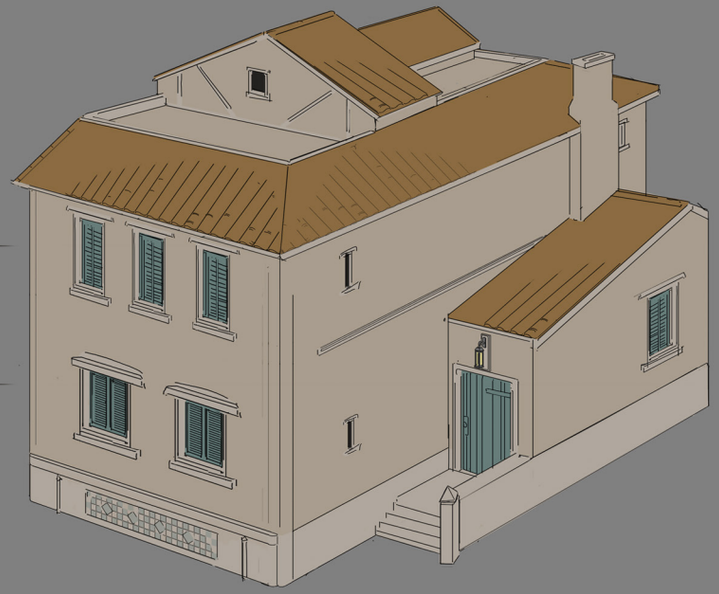

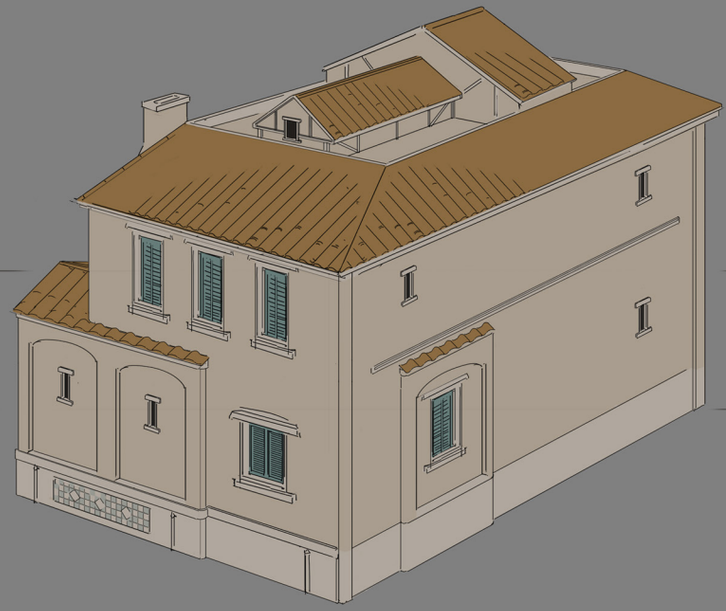

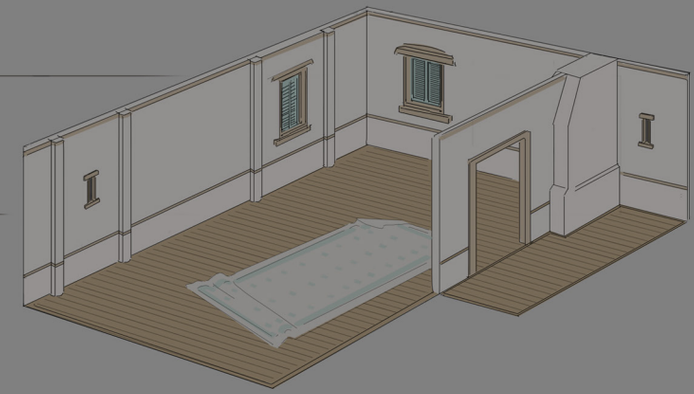

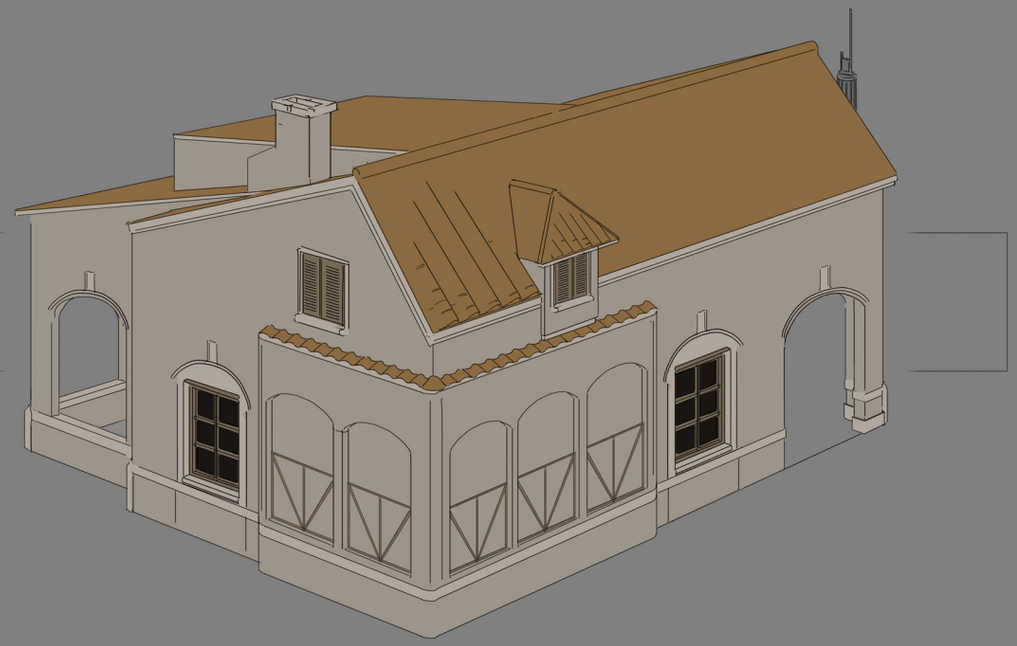

A villa style house was chosen for the Safe House theme. Level design put in extra effort working to help design the floor plans for all the new town centers and Colonial buildings, trying to ensure the best foot print and use of space for maximum reusability.

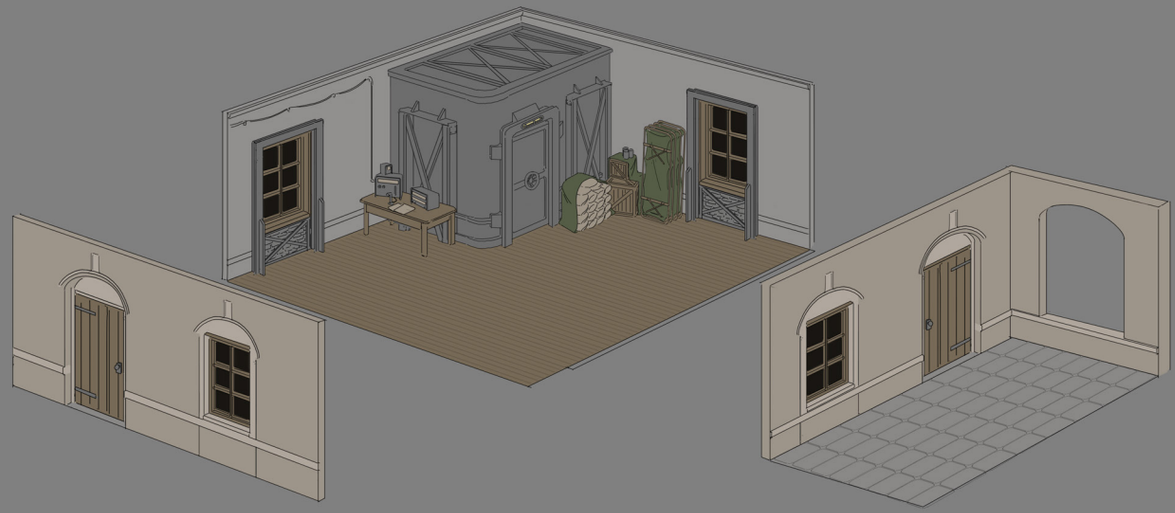

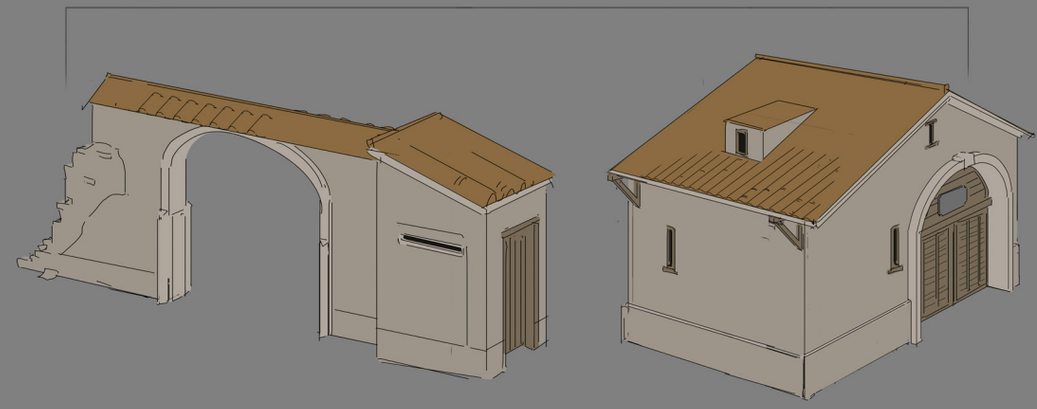

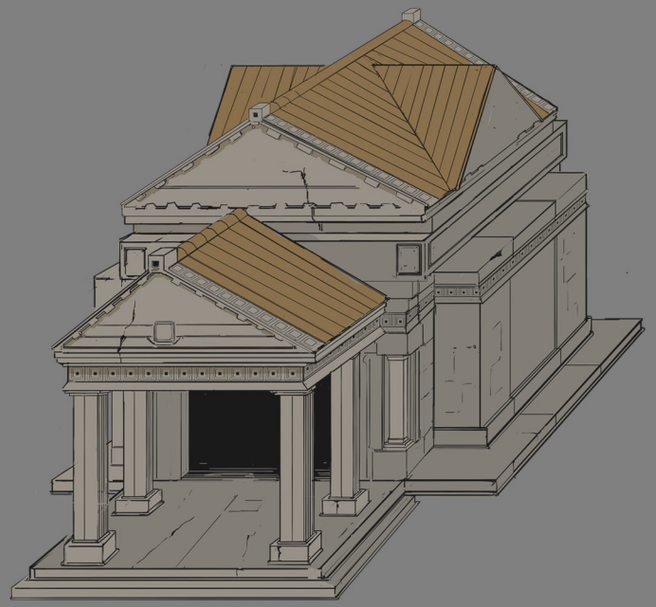

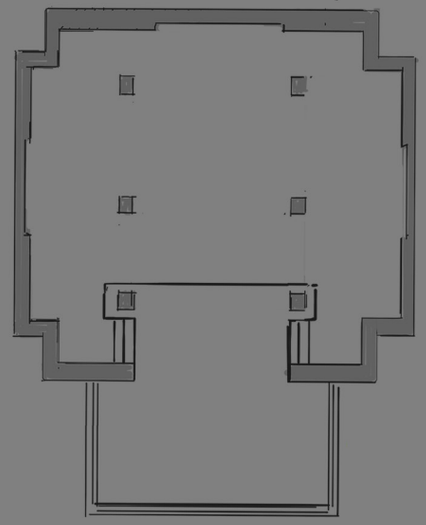

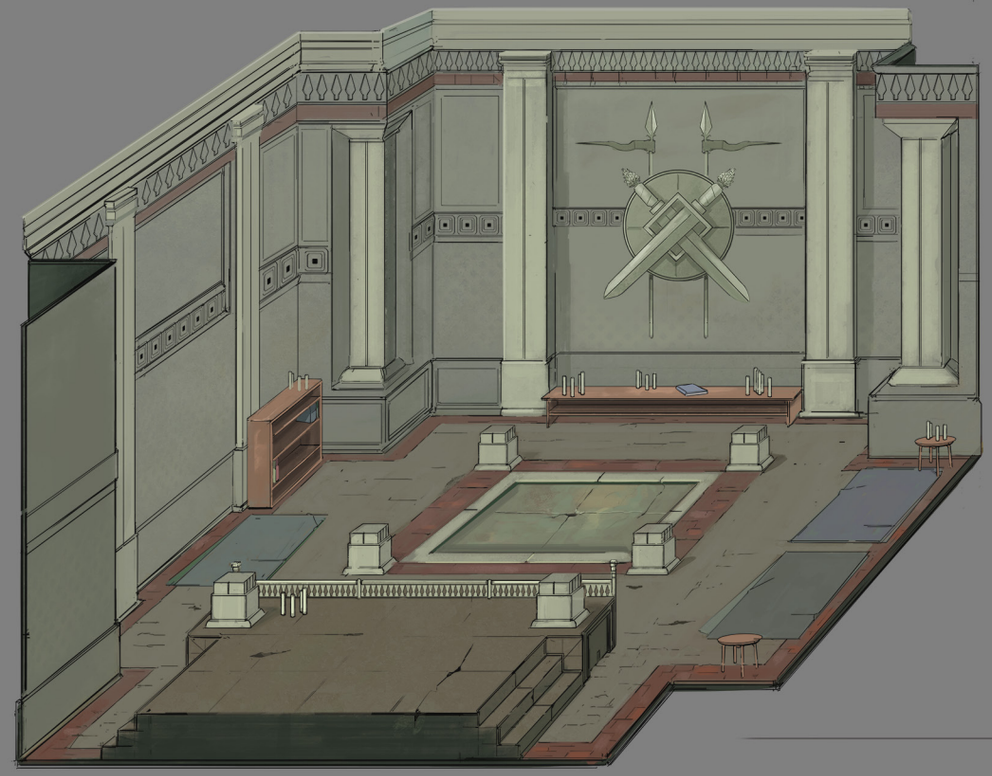

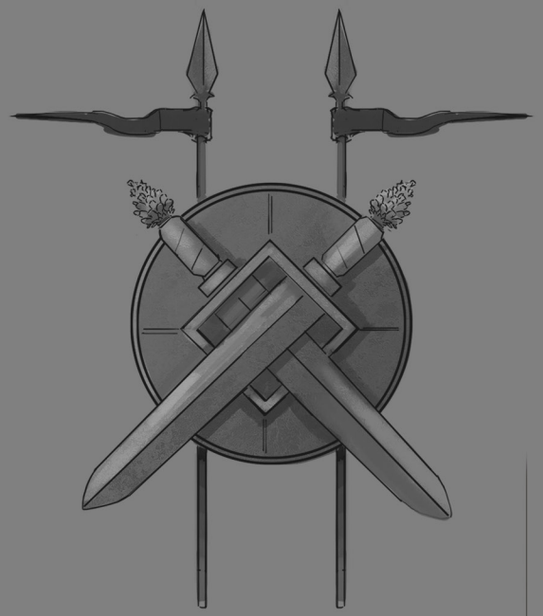

## Velian Temple

Following the Town Revamp, it was always our intention to expand south and introduce Velian cultural influences. A Velian temple asset was unfortunately left on the chopping block until we could carve out some art time to finish it up.

We're always looking for opportunities to express cultural differences diegetically. Religious structures, religion in general, and prayer rituals are often ways we learn from how people in the past lived. Given Foxhole's narrative style, it's always been imperative that the unique Velian way of life wasn't just handwaved through text but rather expressed within the world. - Matt

During the Warden town revamp a number of propaganda posters were made for set dressing.

Much later on, there was a task to design some children's chalk drawings for a lore addition to the world on the Colonials side.

The addition of new bridges to the game was an experiment in level design. Bridge battles naturally create such contested bottle necks that care was put into designing bridges that would give different sight lines and cover to help change the feel in different areas of the world.

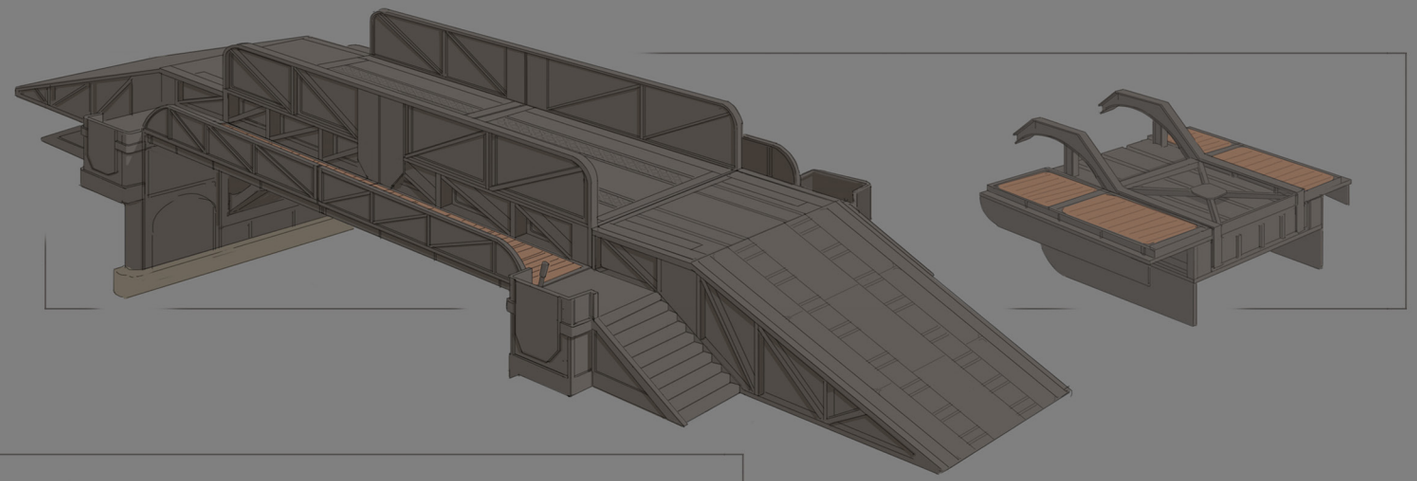

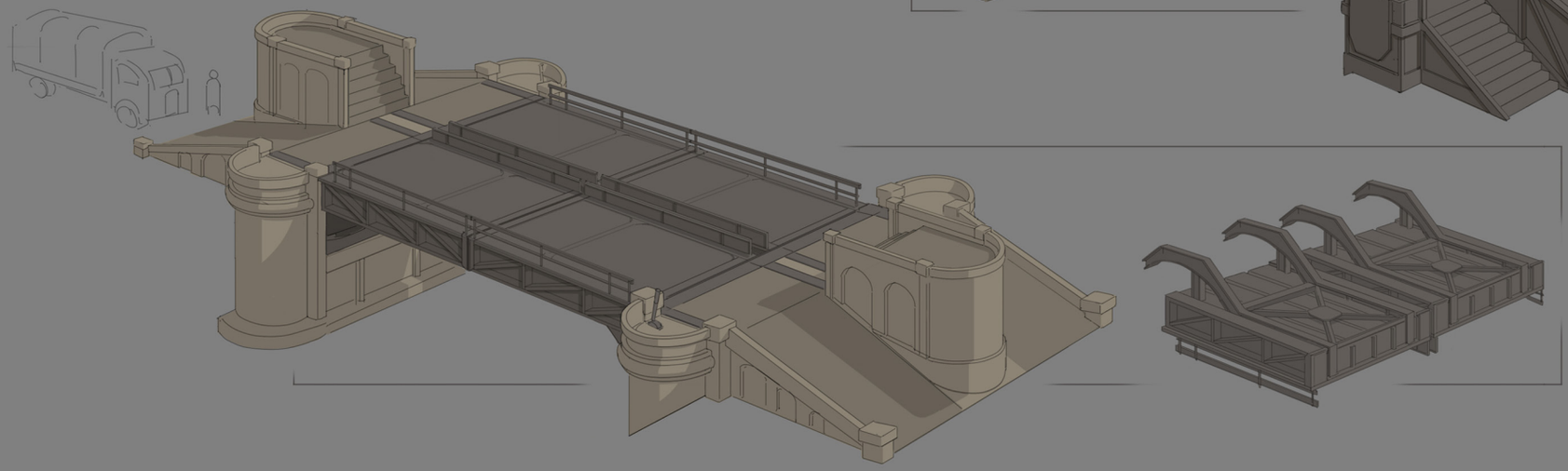



There is always a desire to design more bridges, but they have proven a technical nightmare to implement.

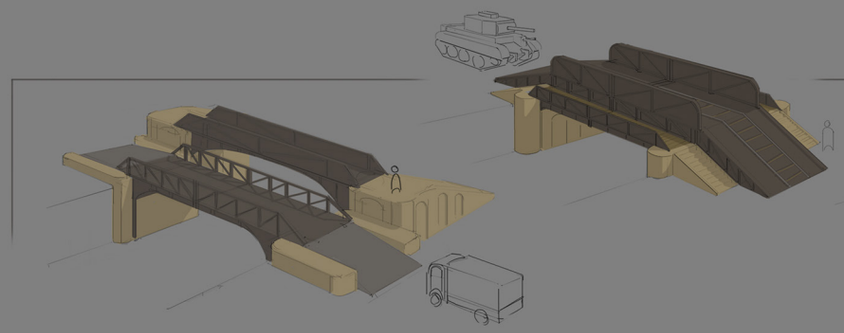

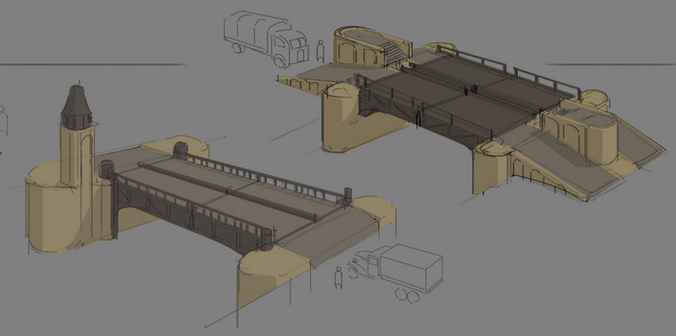

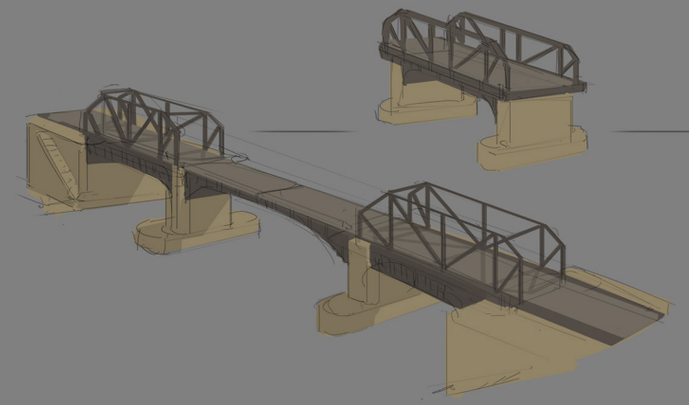

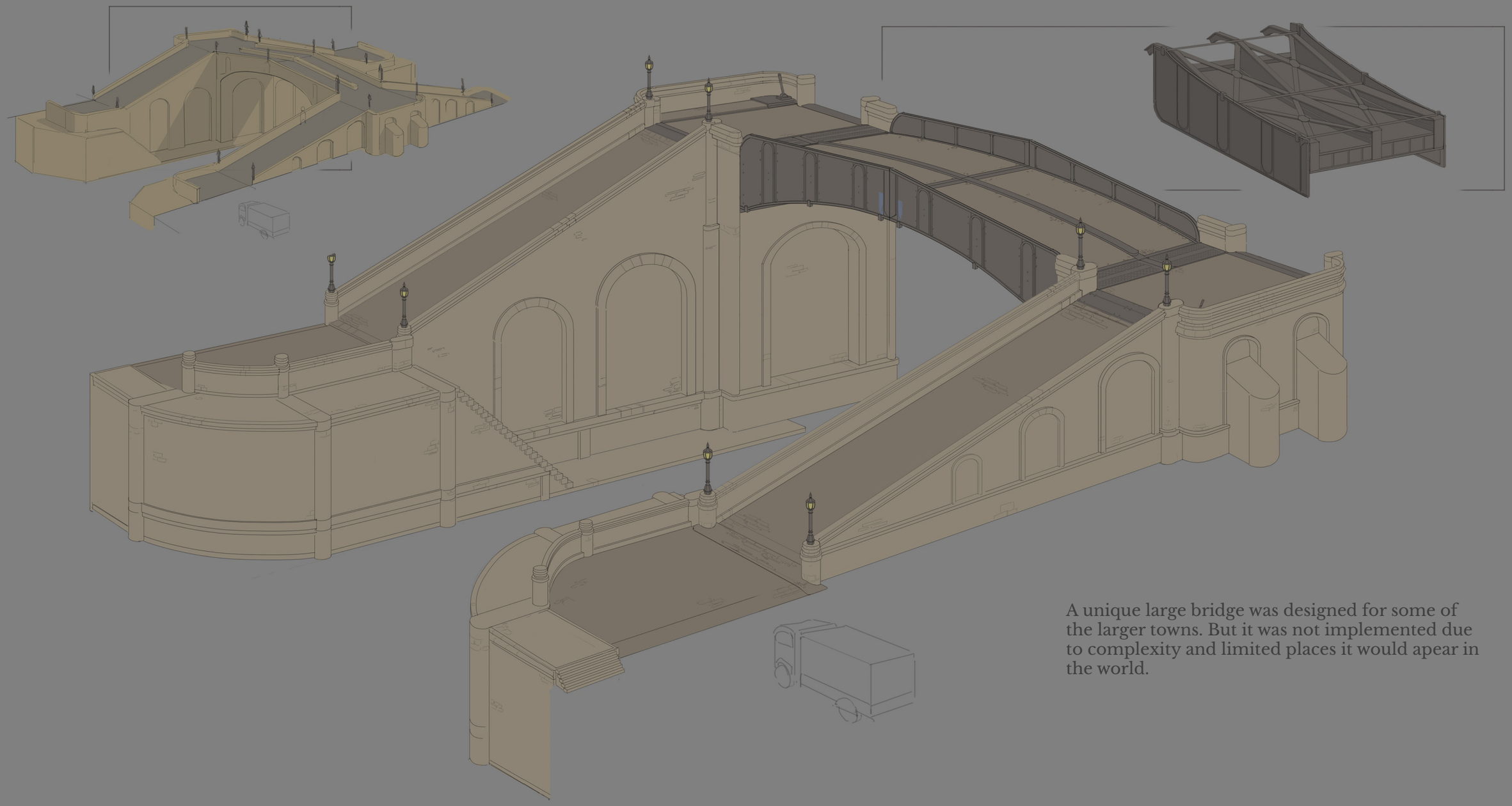

A unique large bridge was designed for some of the larger towns. But it was not implemented due to complexity and limited places it would apear in the world.

Ballistic rocket sites were added in Foundation of War. They were the first super weapons in the game and had the capability to permanently wipe out entire towns in the world. Firing these rockets took an enormous amount of collaboration and led to some interesting player stories, such as the *Jade Cove Crisis*.

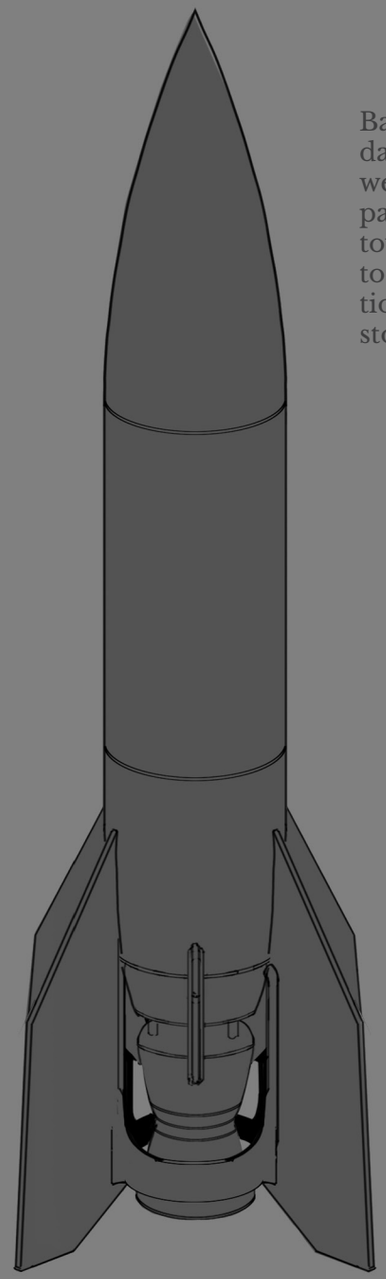

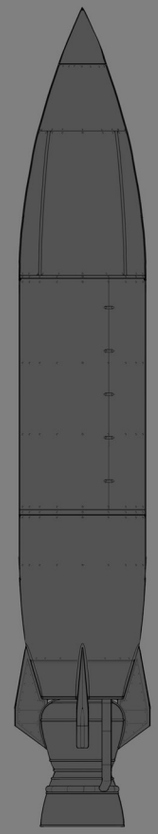

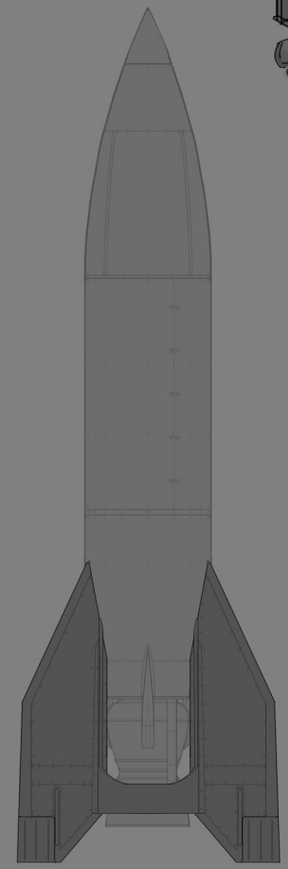

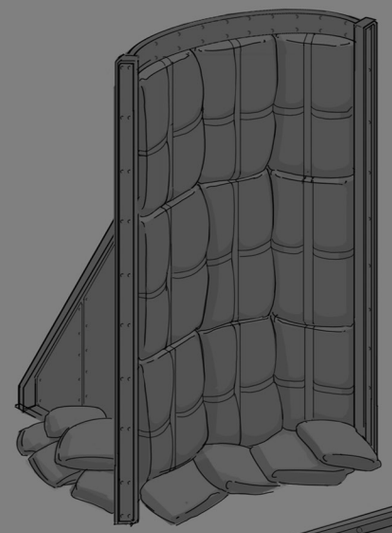

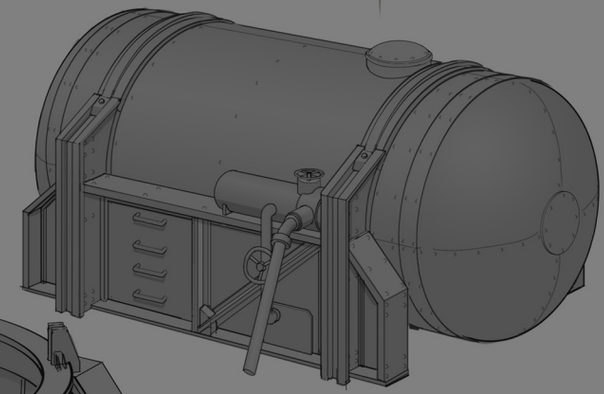

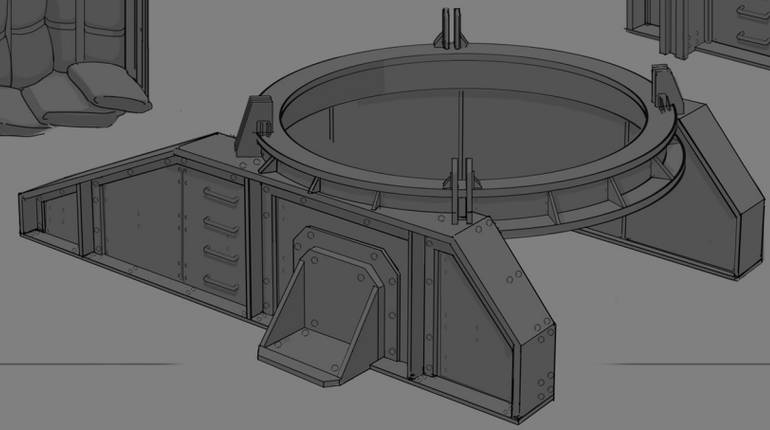

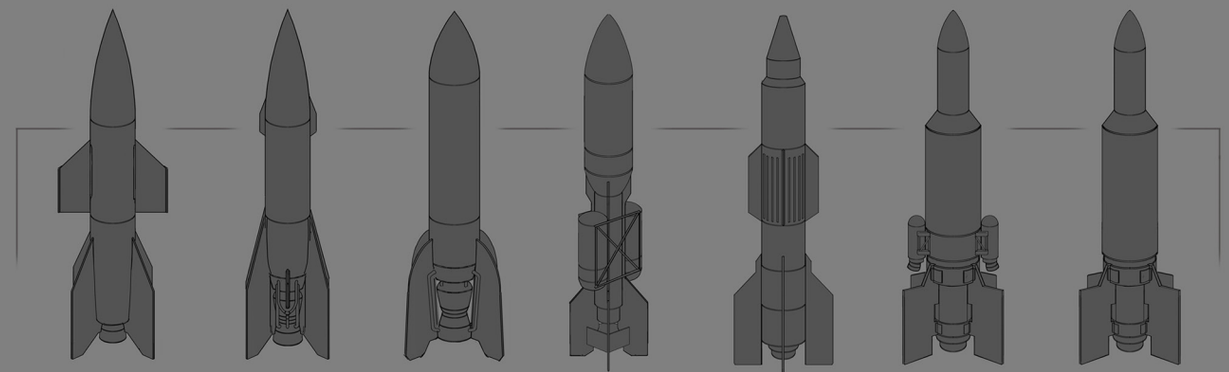

Originally the rocket site was a set piece placed by us around the map. As the game grew and the Facilities feature introduced foundations to build on the game designers decided to change the rocket sites to be player built. Small visual additions needed to be made for the art asset to accommodate the new fuel pipeline systems in the game.

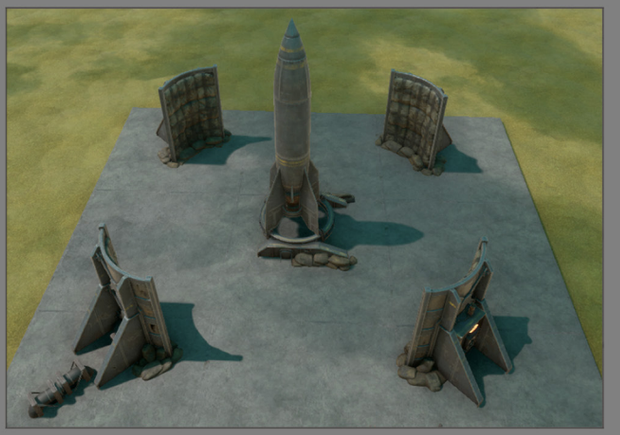

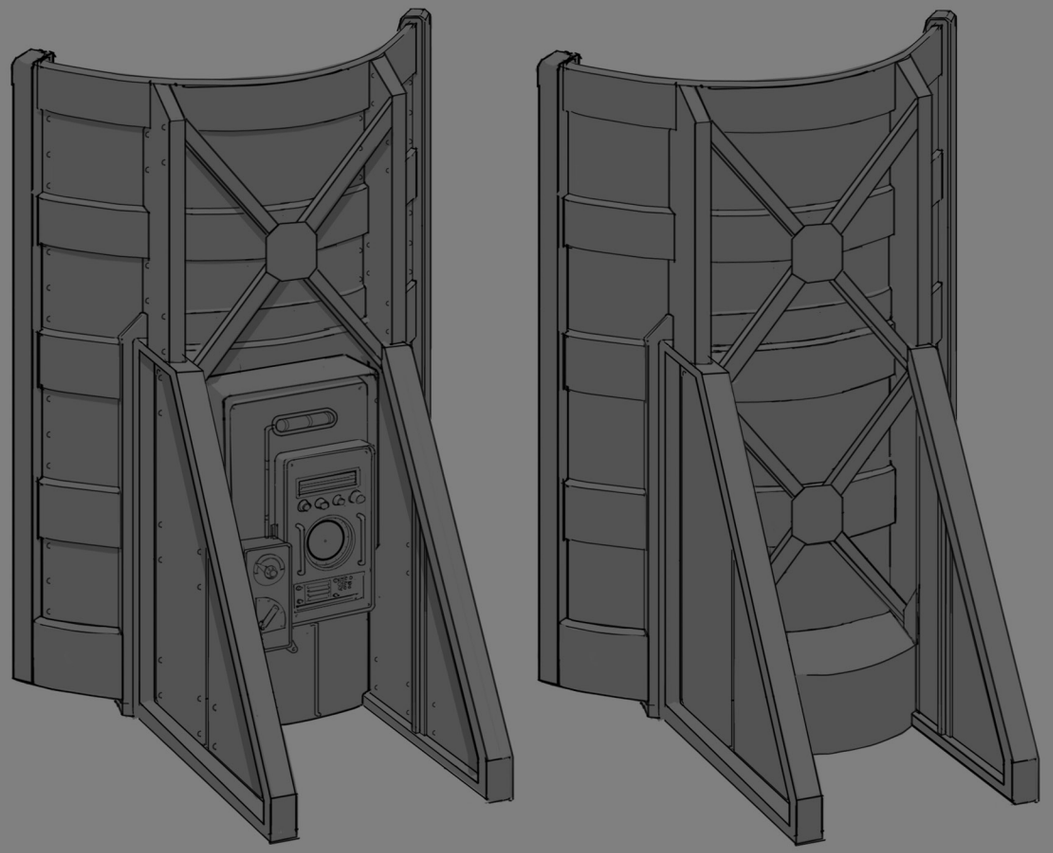

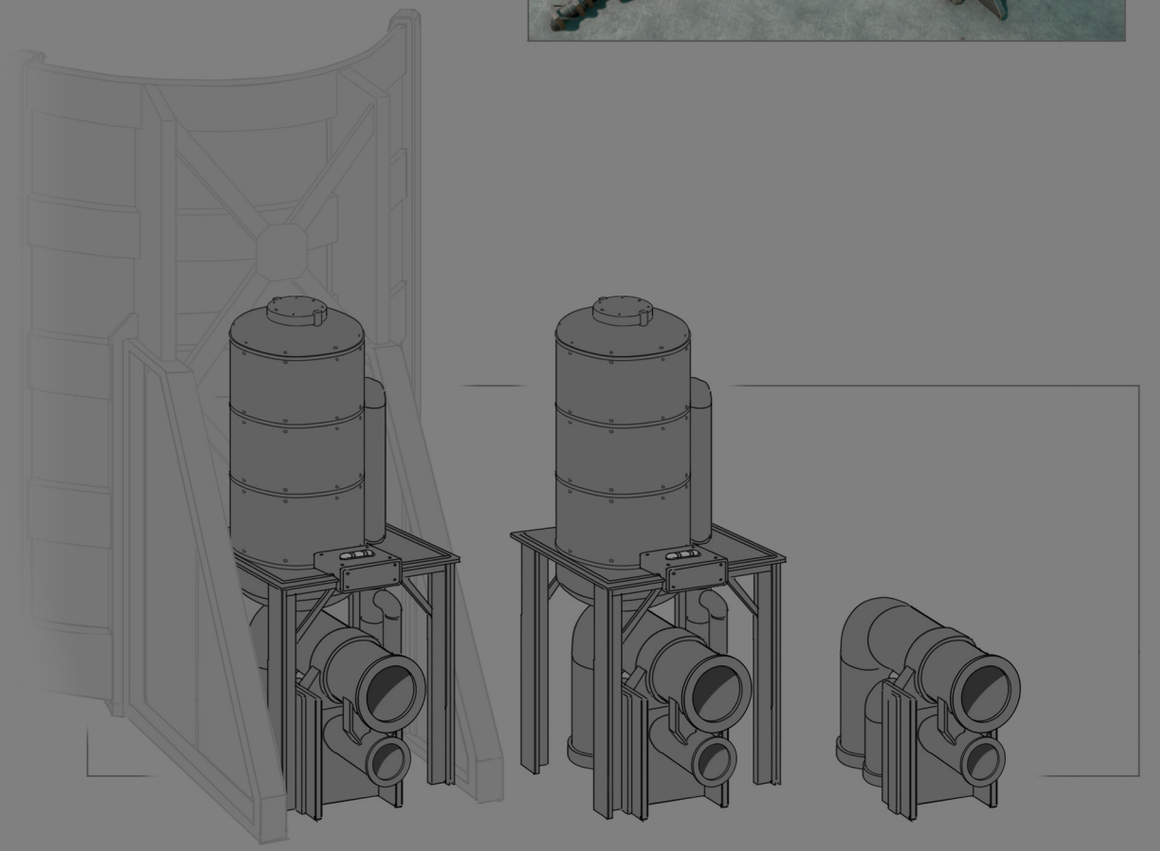

The addition of Trenches, AI defences and Facilities invovled a lot of previz and screen shot paint overs. A lot of the work for trenches was very technical and a programmer and modeler worked closely to developed a lot the funcionality with block in models. The screenshots were a final coat of paint.

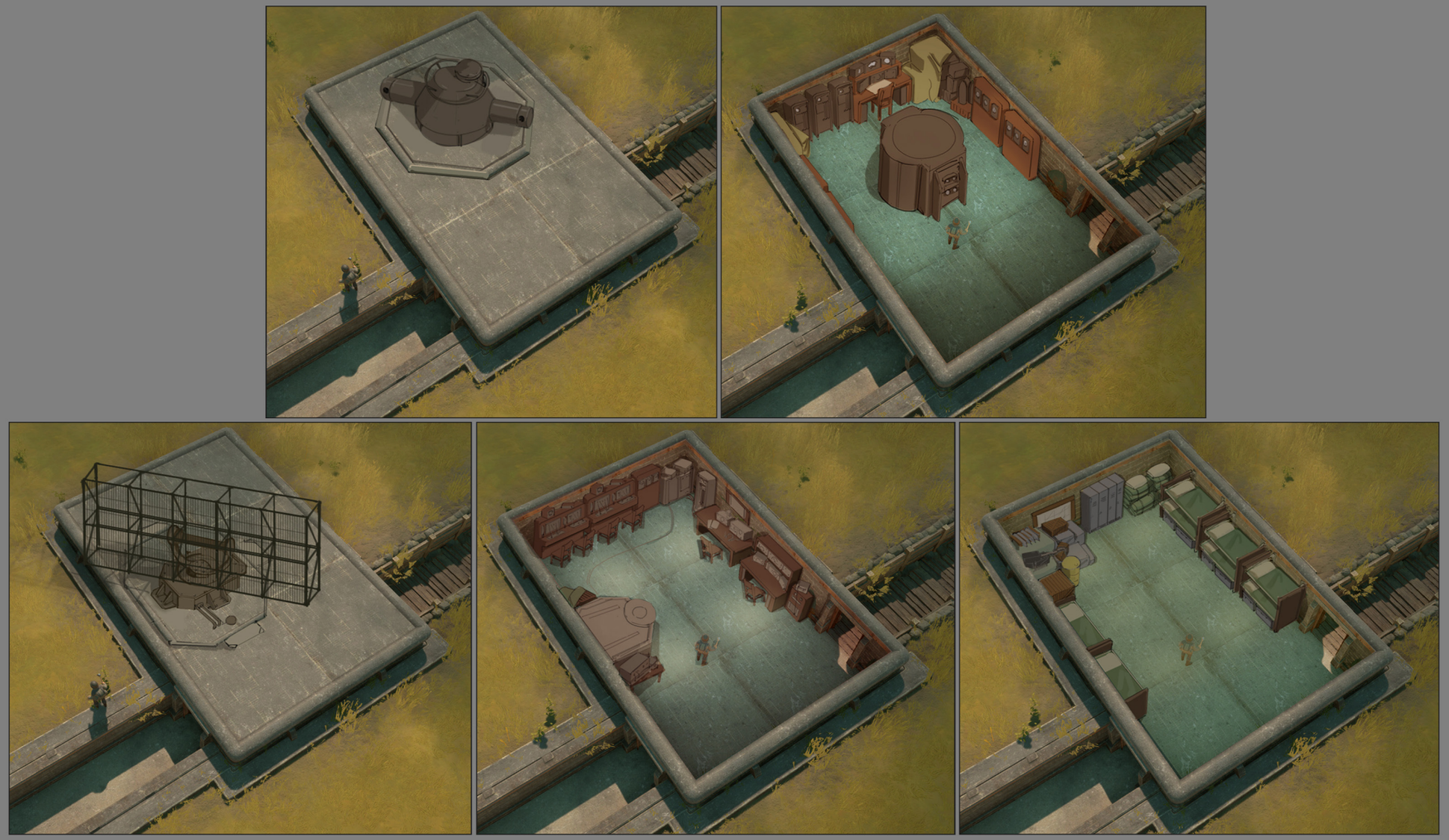

The Bunker interiors and superstrutures took up a lot of the concept art time for the feature. The world looked dead when bunker bases were just empty concrete.

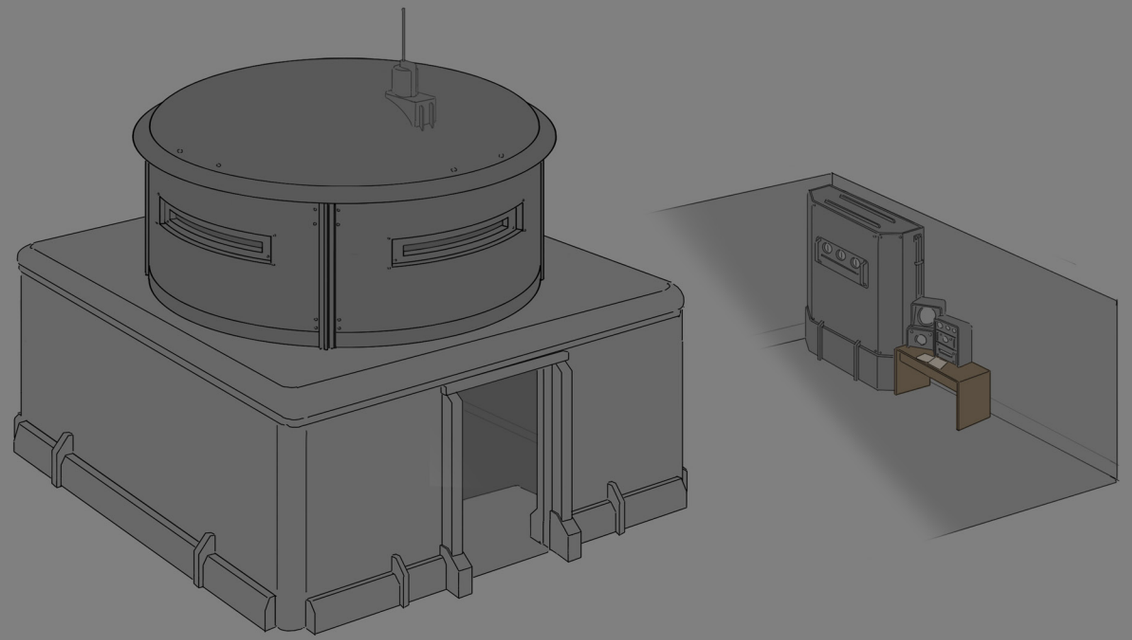

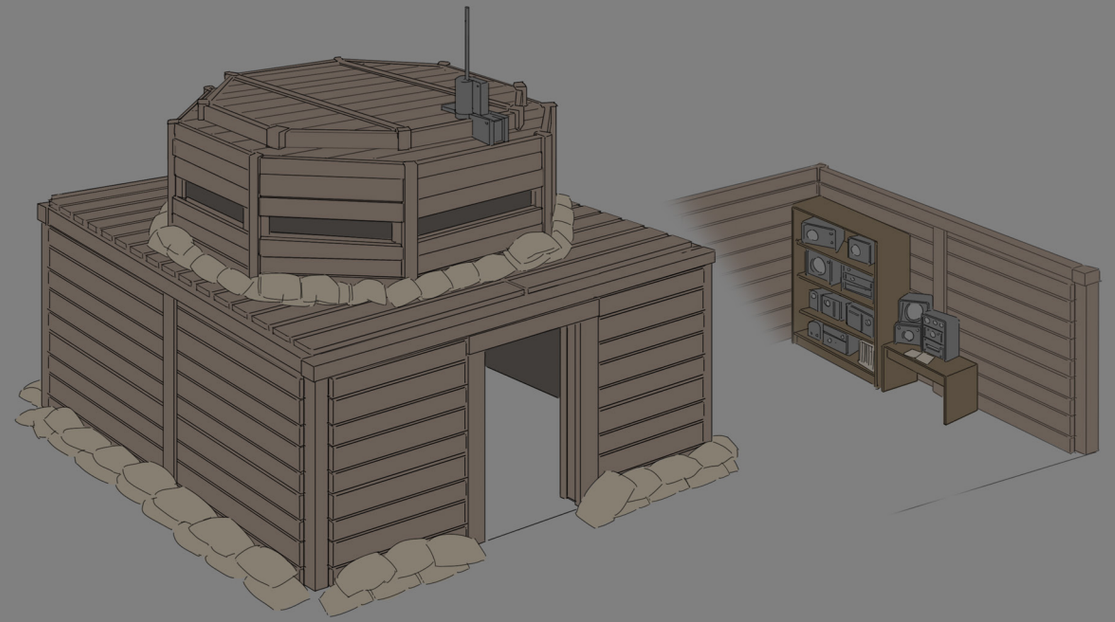

AI defences and unique bunker pieces were quickly sketched out as the modeler had developed a good working pace with the progammer. A real flow state existed for the art development of the trenches. A few bumps in the road were hit when figuring out the different materials from tier one and two bunkers.

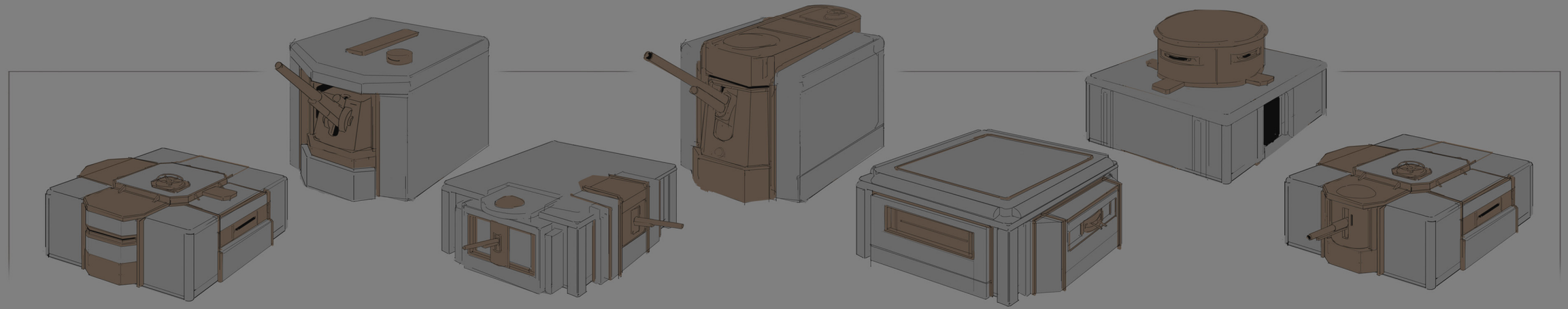

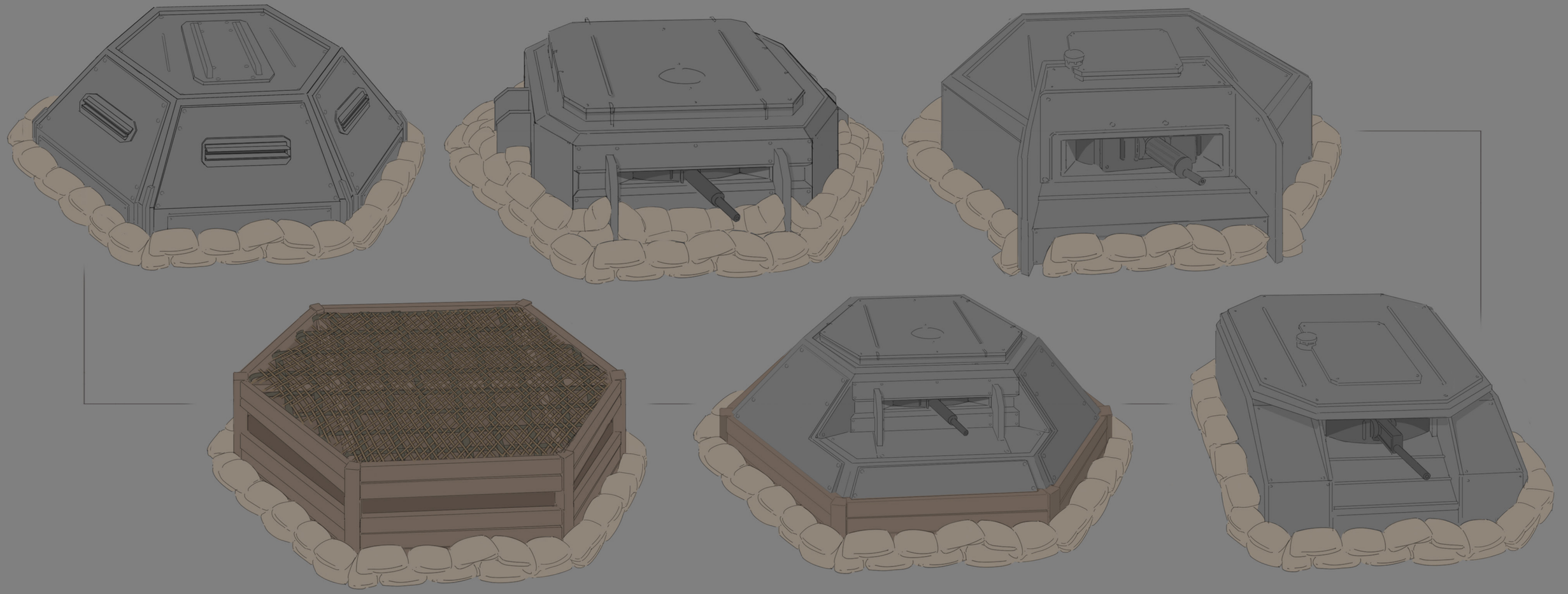

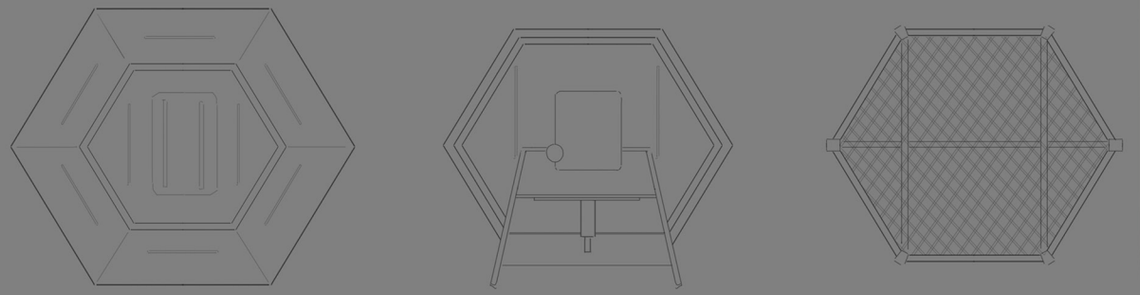

The AI pillboxes were designed with a hexagon shape to stand out and be unmistakable at a glance so players knew what they were dealing with. In the original design brief they were going to need to be connected to trenches and powered with the new pipe system.

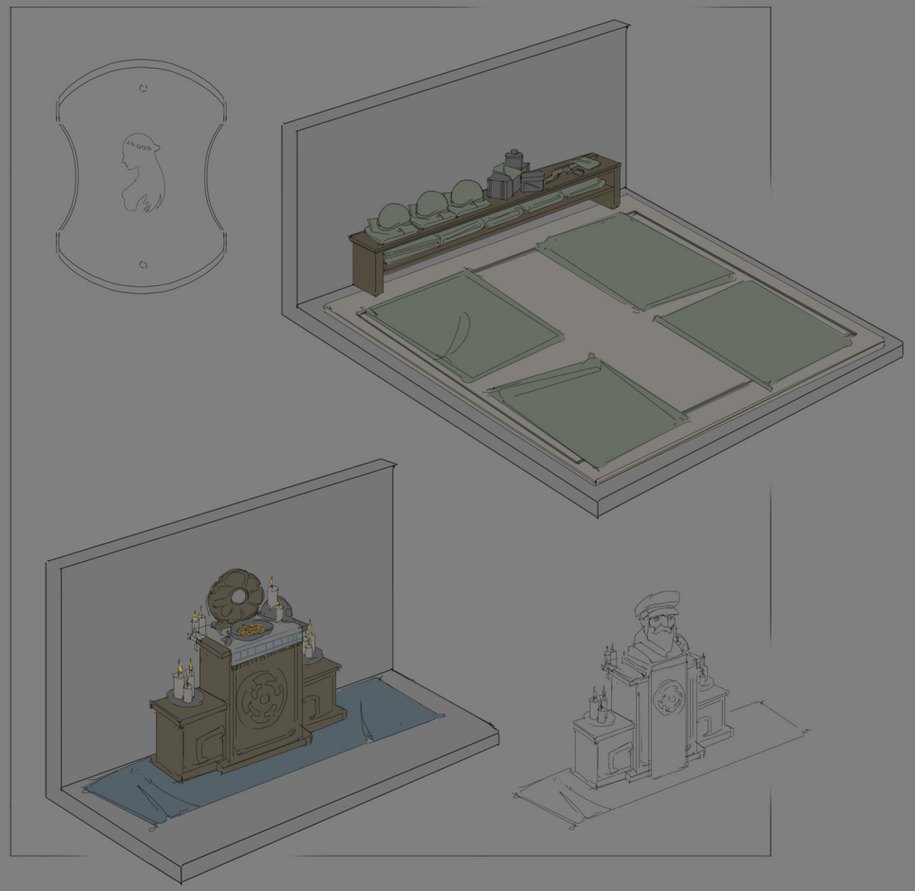

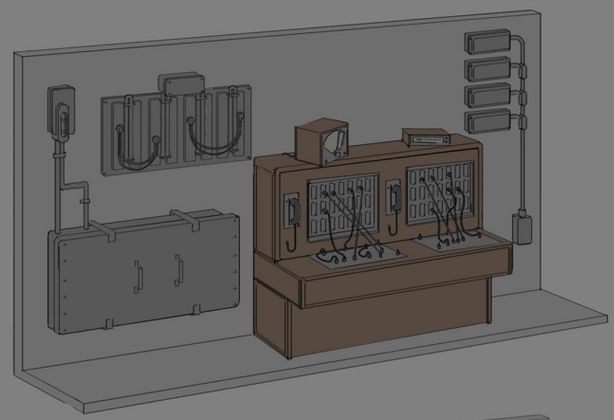

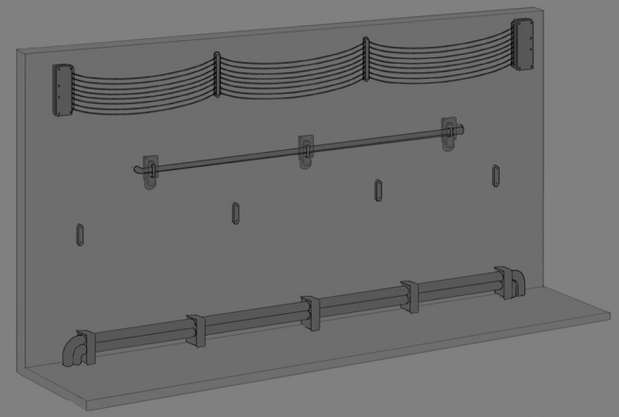

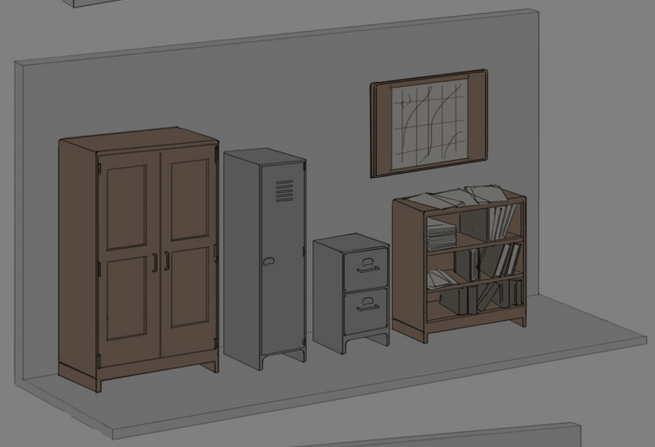

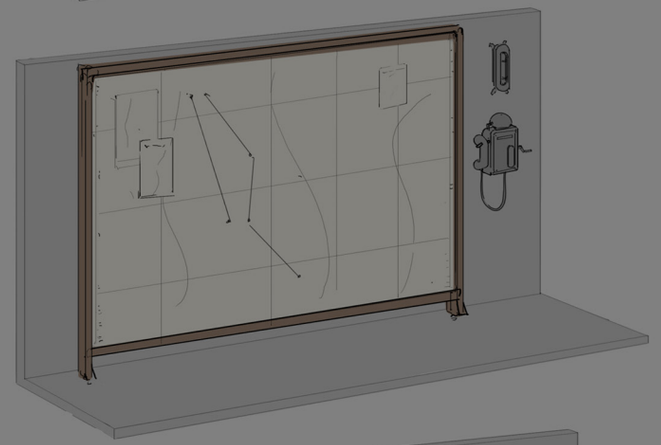

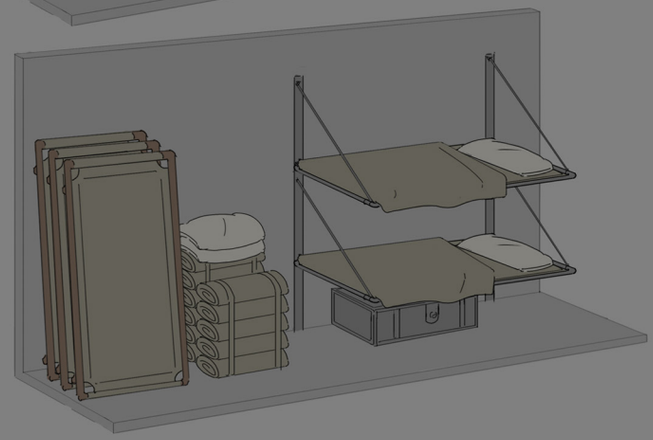

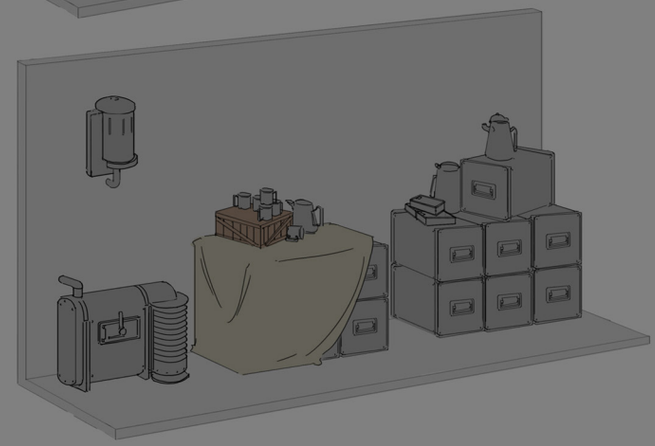

These are fun Warden and Colonial bunker interior assets that never went live. As we balanced bunker gameplay, their initial design purpose slid out of alignment from where we started, which led to them being shelved.

On the other hand, it was rewarding seeing bunkers fleshed out with details like libraries, sparring rings, and training equipment. It'd be great to find a way to better incorporate these ideas in future updates.
- Matt

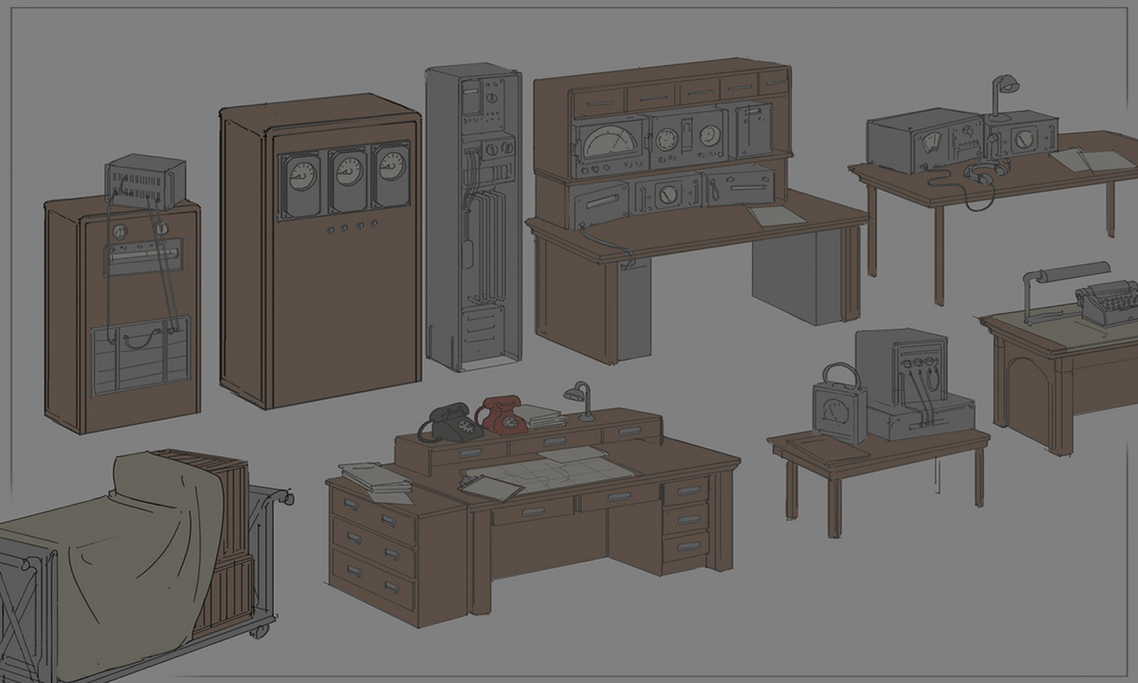

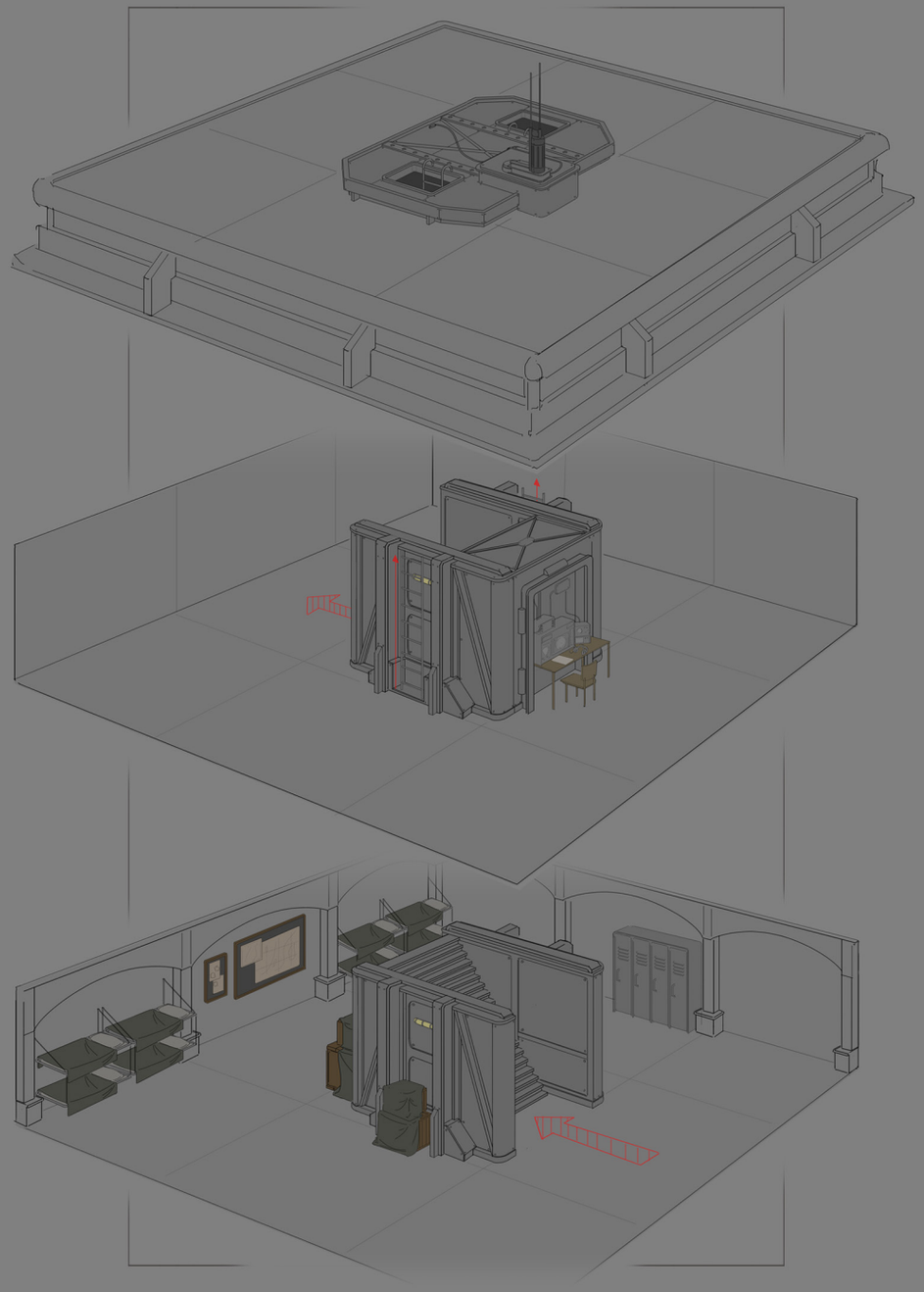

The majority of the concept work was designing the interior decorations. When work on them first began they were thought of as setdressing, something players could use to roleplay with. Game designers on the team liked them so much they decided to add game play functionality later.

The nine square super structures were the other large visual design part of this feature.  First was the Storm Cannon and at the time the idea you needed a full nine square bunker was not set in stone.

Most recently in production we have had the time to support structures with additional layers beyond one. This was impossible before as the tech didn't exist.

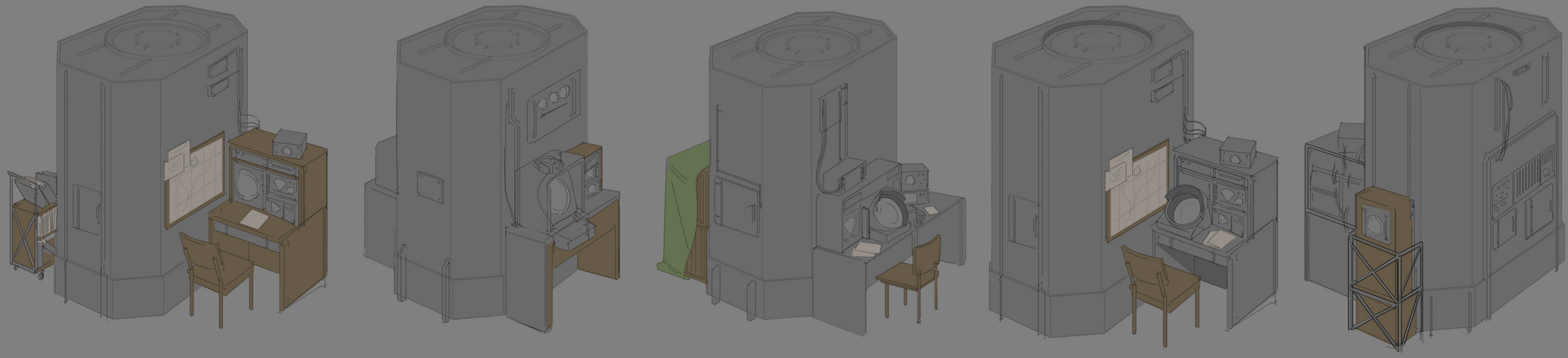

The Intelligence Center was another big one. An idea was, a different configuration of concrete would get you different building types on top but that was dropped after the players had access to the Storm Cannon.

The Storm Cannon also influenced the layout of the intel center with the idea of super structures needing a central column on the inside as a point for players to interact with.

The visuals for the intel center were designed after radio arrays for detecting aircraft. At the time Planes were thought impossible to add to the game and we wanted to reference these iconic structures.

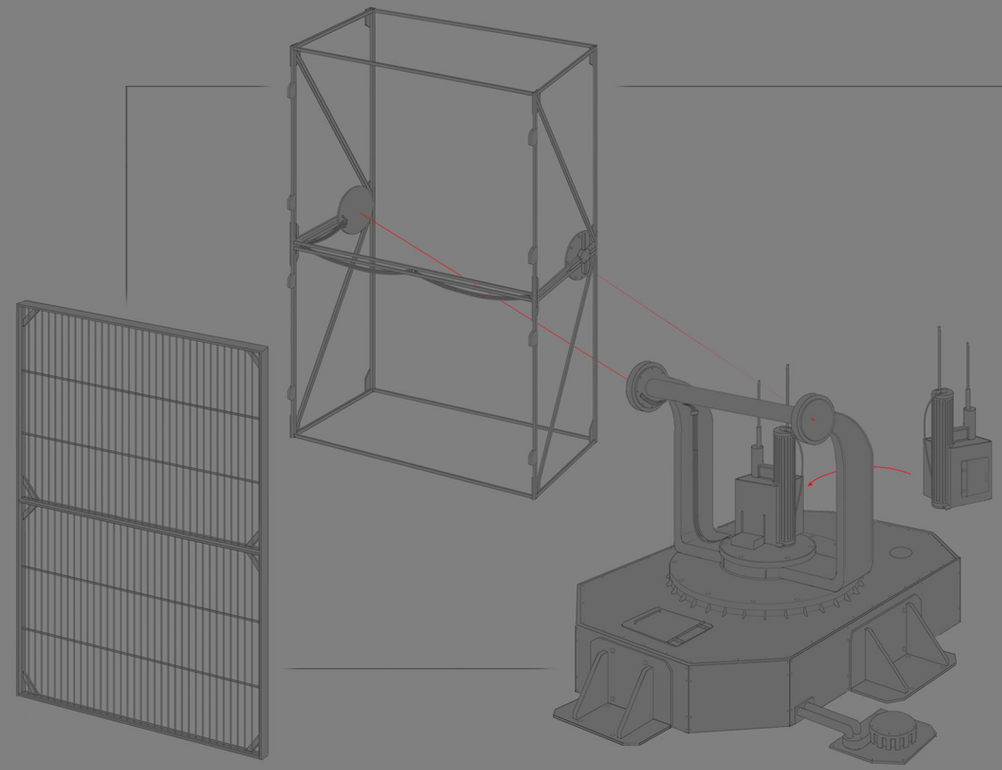

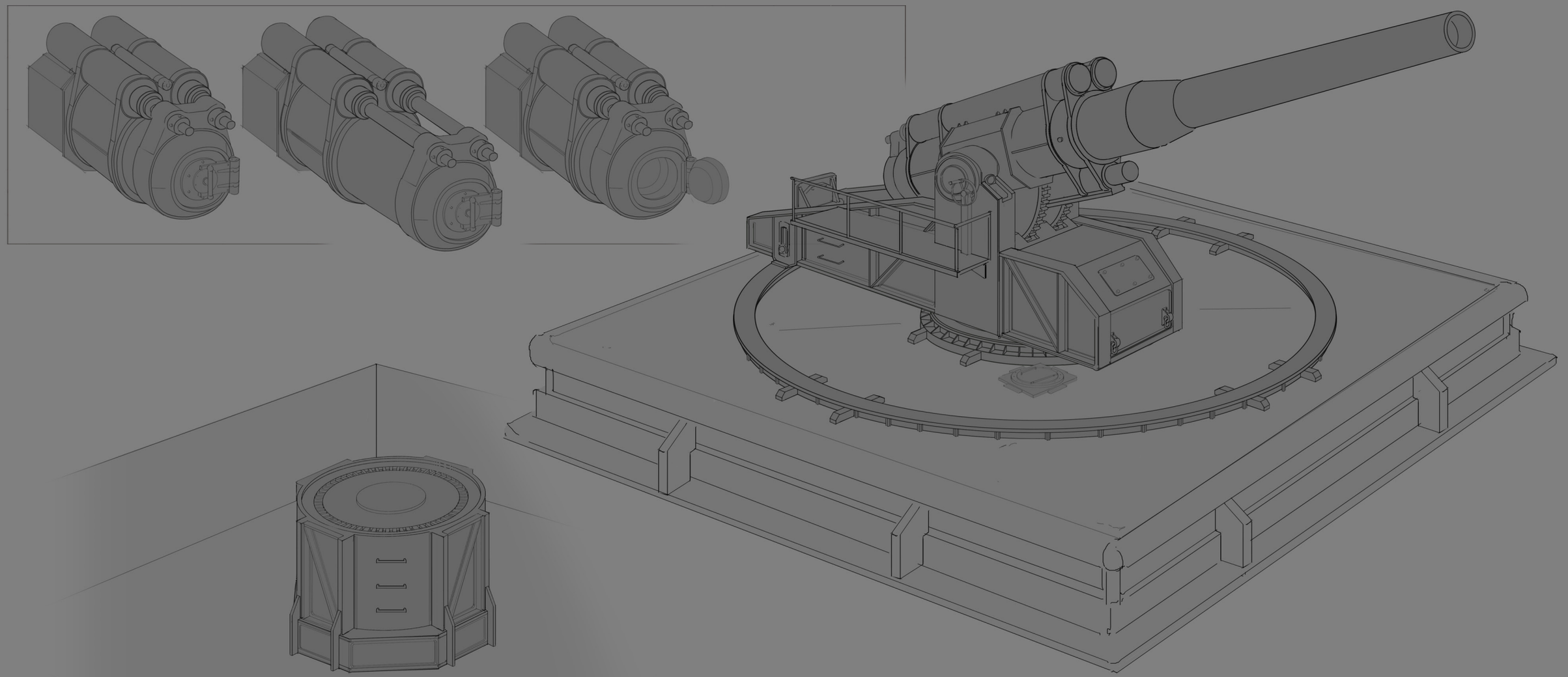

The idea for the Storm Cannon was to give base builders an end game objective to work towards. A reward for building their giant bases. When visual designs began the emplaced artillery was still faction agnostic and it was a natural fit to have the storm cannon be an extension of that visual language.

*Leary Shellbore 68mm*

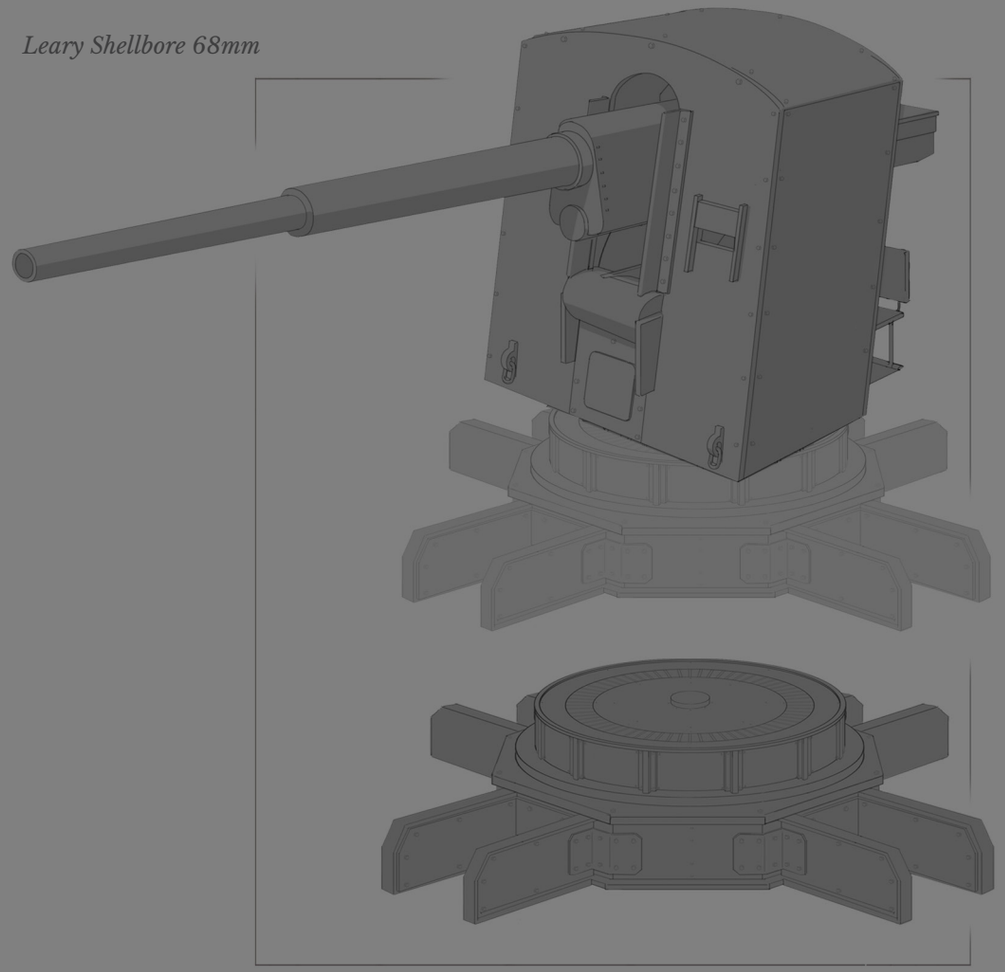

The visuals for the first emplacements were not originally planned to be Warden. However there was a general theme that since the battlefield was on Warden territory it would make sense that the structures, like the buildings, bridges, and the Bulwark were all of Warden origin. The choice to later design a set of Colonial emplacements just sort of fell into place.

To save development time, a single base, or foot, was designed to be reused on all emplacements. Later a Colonial variant was designed.

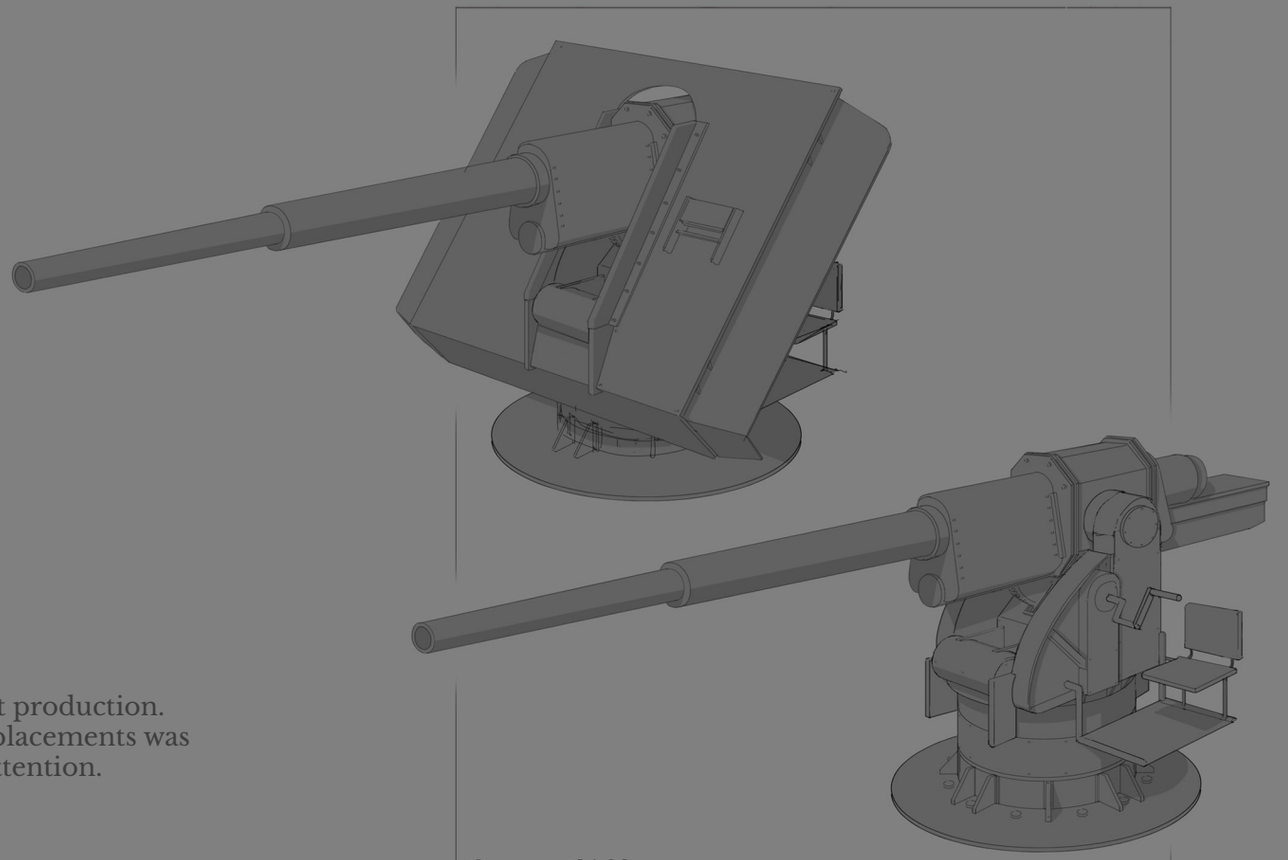

*Alternate Shield*

The emplaced weapons were faction agnostic for a long time throughout production. The reason was simply time and resources. Creating faction specific emplacements was low priority as the feature worked and other parts of the game needed attention.

The Huber Starbreaker was the first one hundred percent Warden Emplacement. The other, the Warden 150mm Heavy Artilley began slightly before we decided to make faction specific sets of Emplacements.

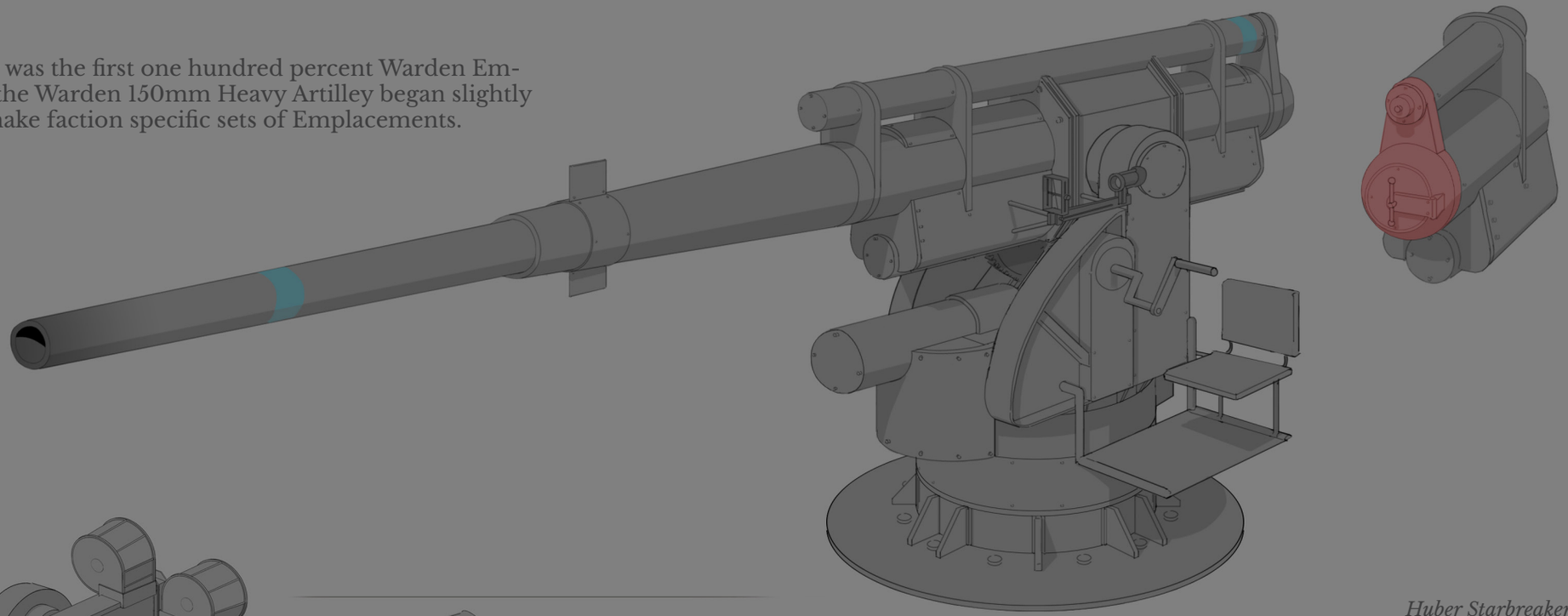

*Huber Starbreaker 94.5mm*

*Leary Snare Trap 127*

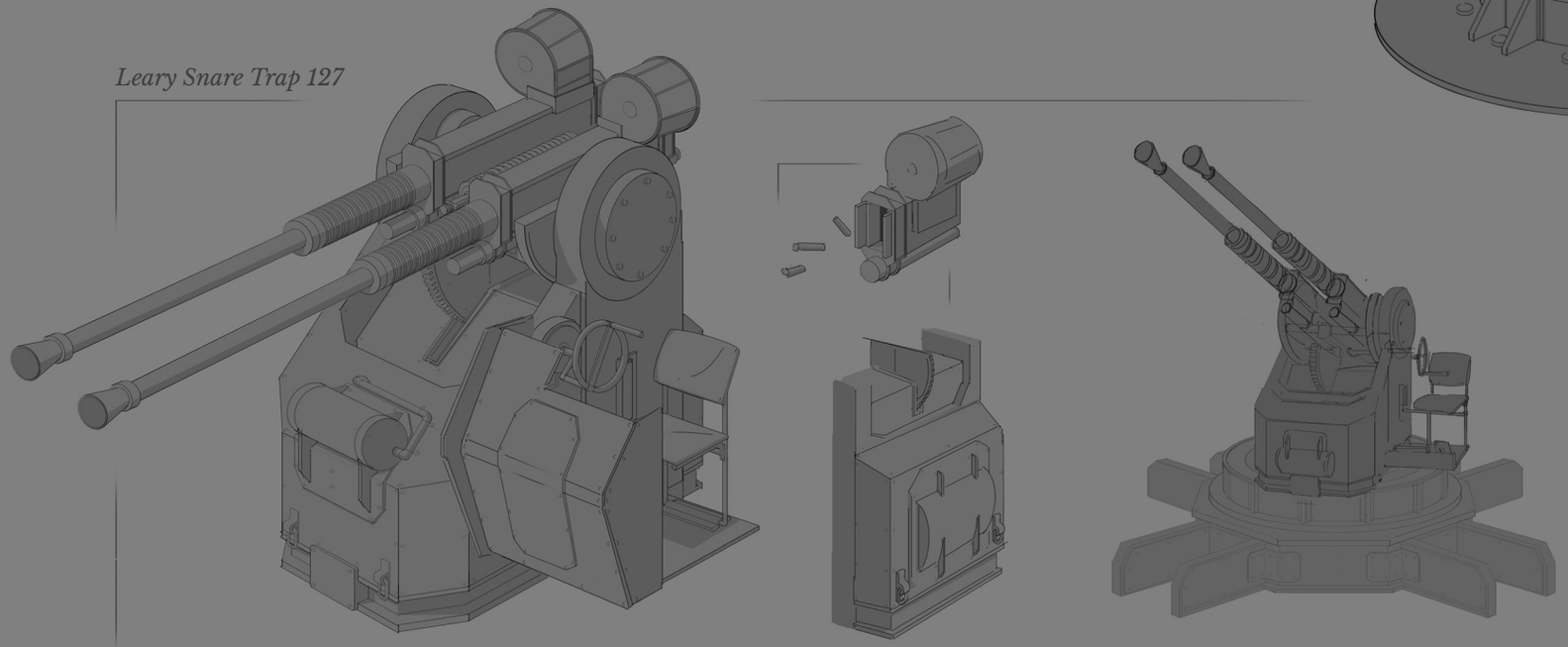

The Emplaced machine gun was designed to look like an anti air weapon and modeled to be able to tilt fully backwards. At this point planes were impossible and there was no thought we could add them.

However we wanted to capture the feeling of the real function of an emplacement weapon like this. Years later with planes we made sure to update their function instead of making new anti air emplaced machineguns.

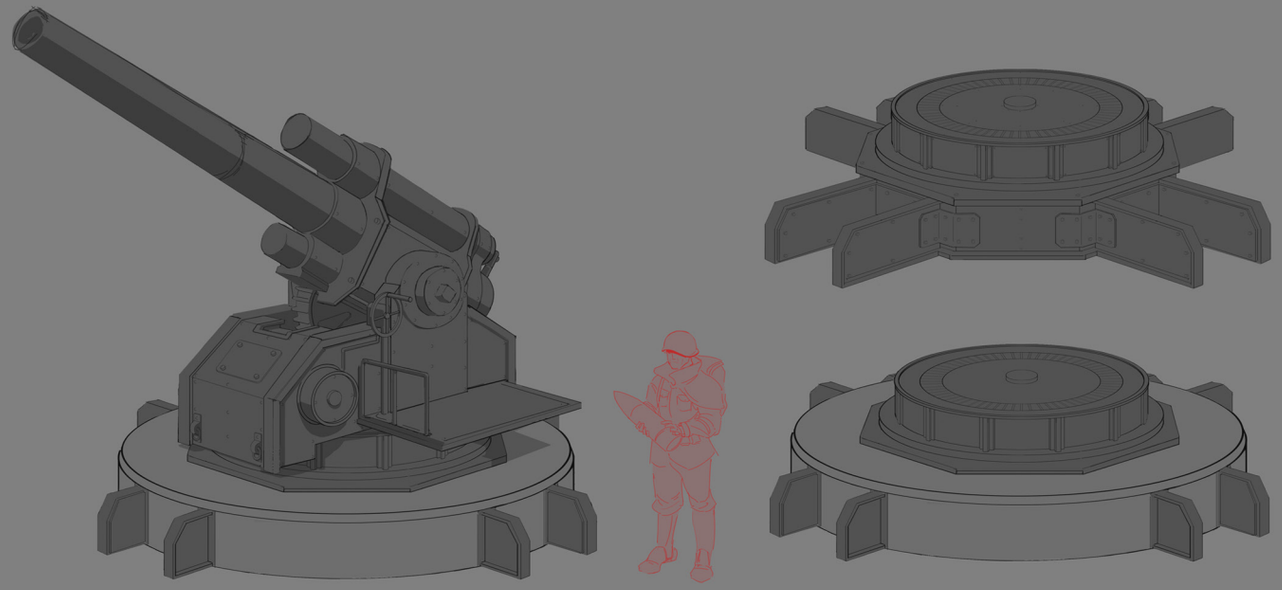

*Huber Lariat 120mm*

*Huber Exalt 150mm*

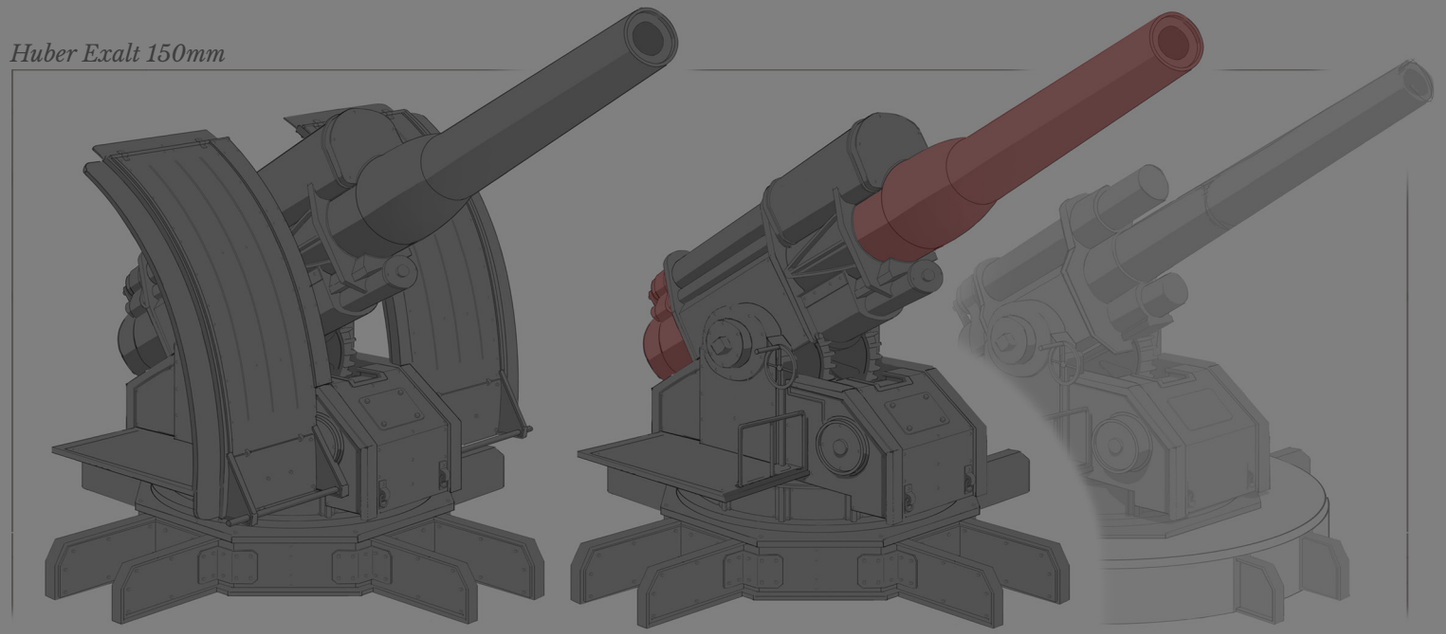

Alongside the 120mm and 150mm Cannons a few Emplacement Mortars were designed.

They didn't get adopted because there wasn't a clear functional difference between Mortar artillery and Cannons.

Years later Mortars take on more specialized roles with the 250mm and bunker buster Mortar weapons.

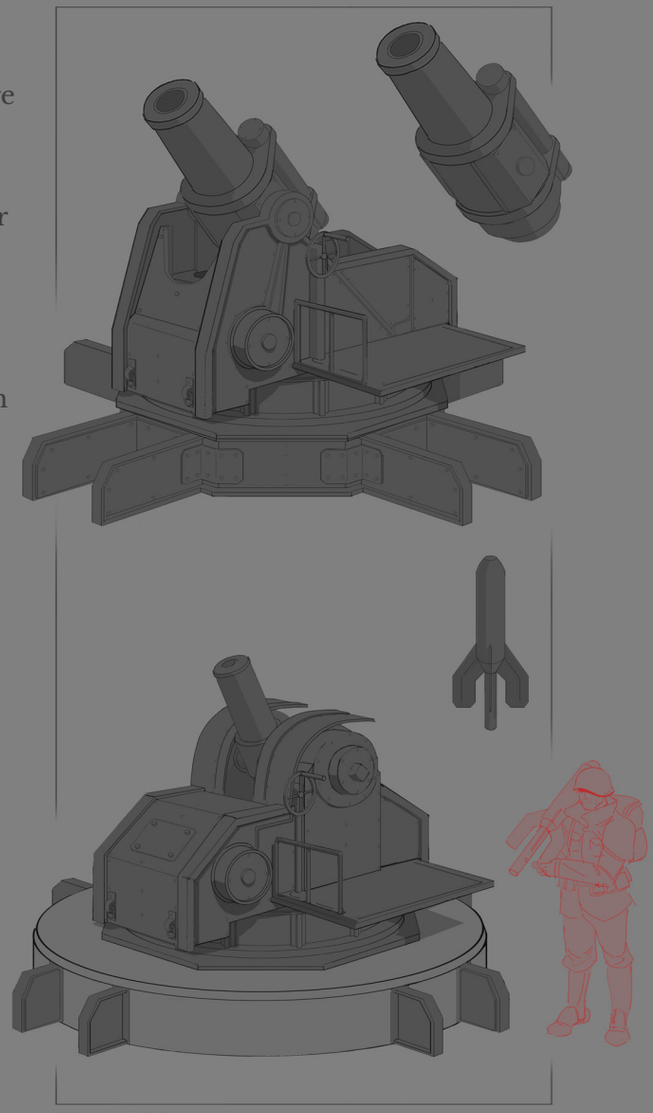

*Unused Mortars*

*DAE 1b-2 Serra*

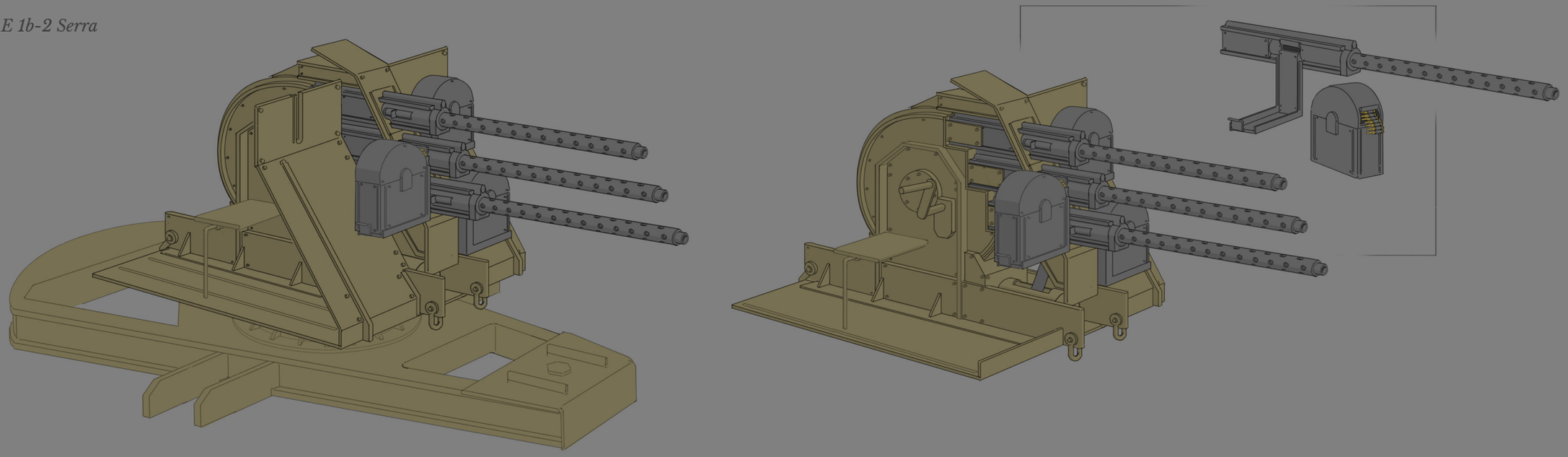

When it finally came time to develop a line of Colonial Emplacements all the features of the emplacement weapons were known. At this point there was a dedicated task to flesh out all the weapon options at once

The Colonial Emplaced MG was based on a British naval AA turret that had the ammo boxes in front of the shield.

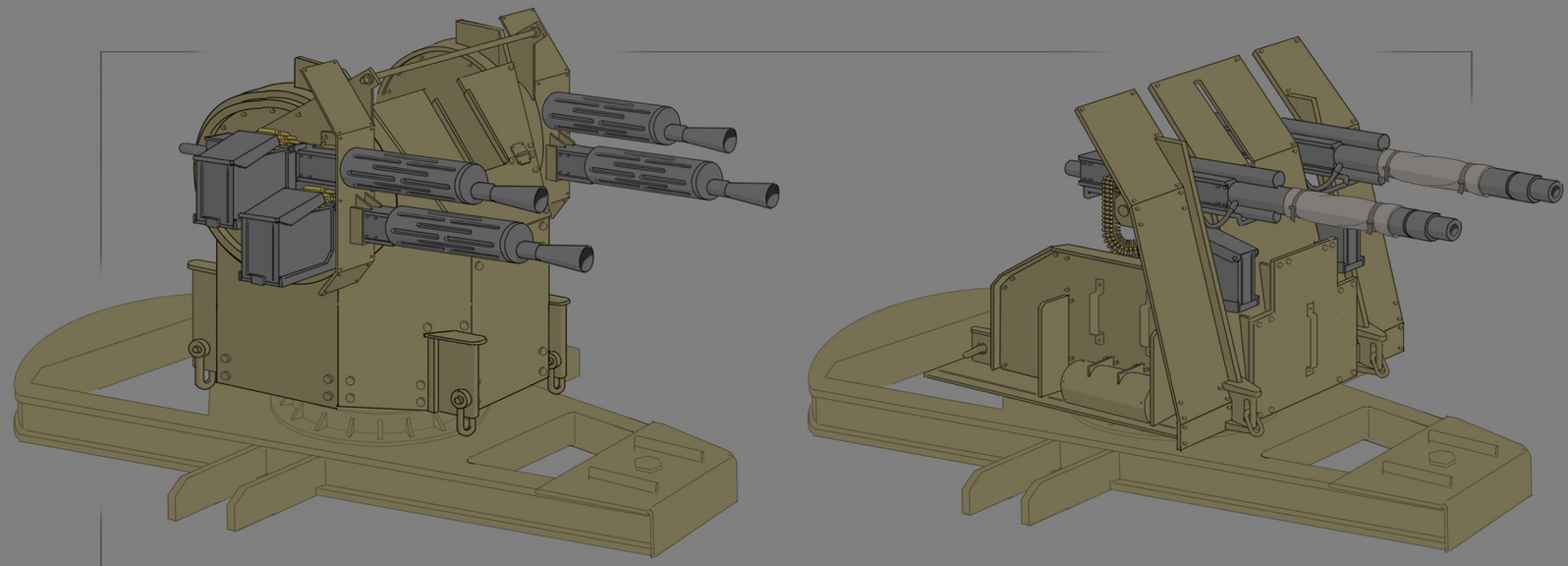

*Alternate Designs*

*DAE 1o-3 Polybolos*

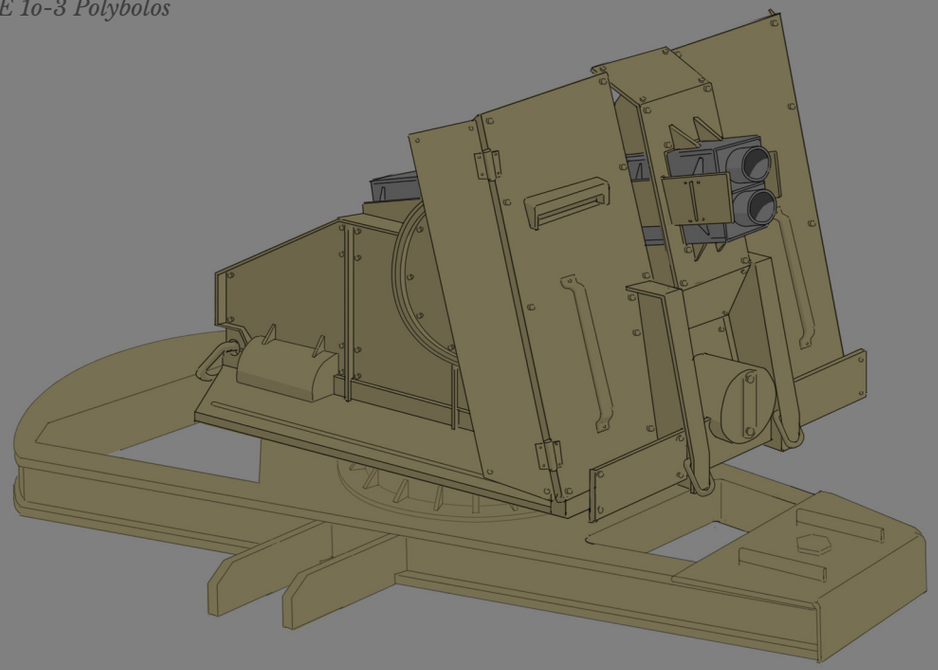

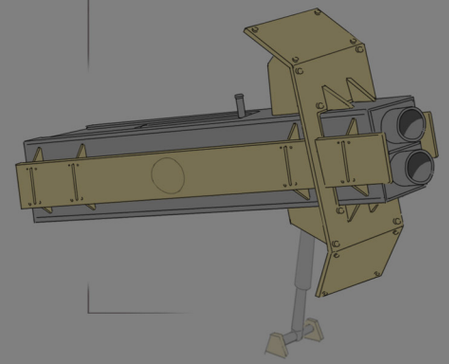

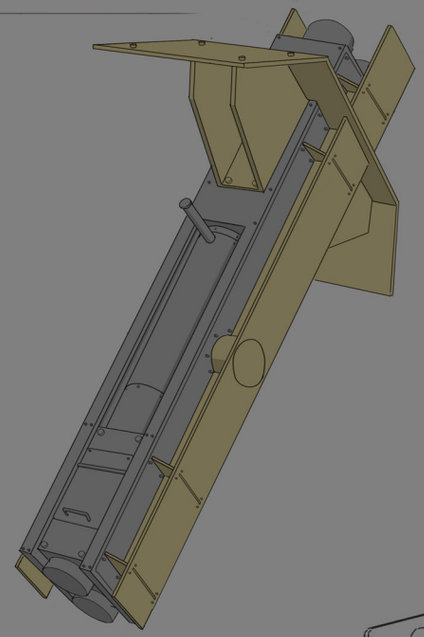

The Colonia anti tank option came with a request. We had not used the PIAT ARC/RPG ammo yet for the faction and the game designers wanted a reason for them to manufacture it. The anti tank Polybolos was a fun unique design to work on.

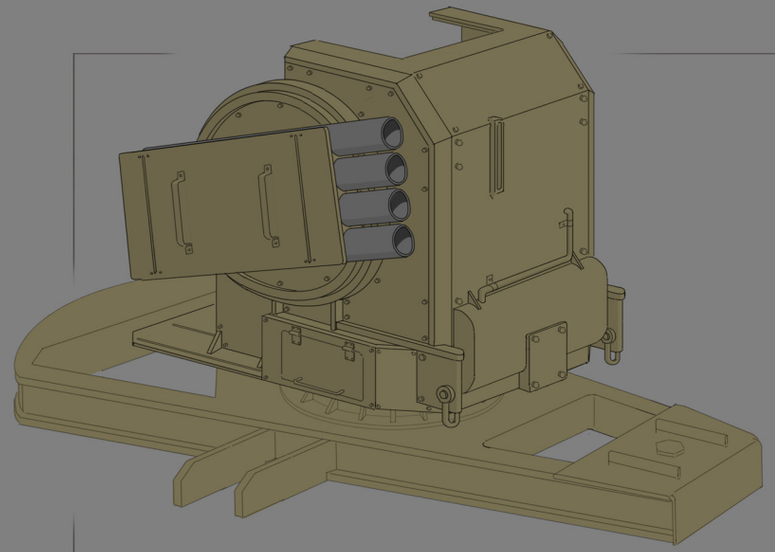

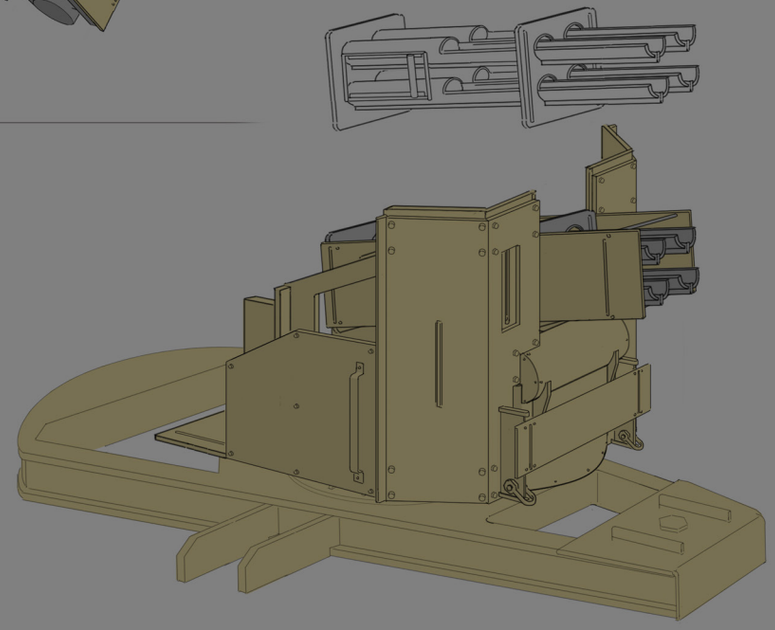

*Alternate Designs*

*DAE 2a-1 Ruptura*

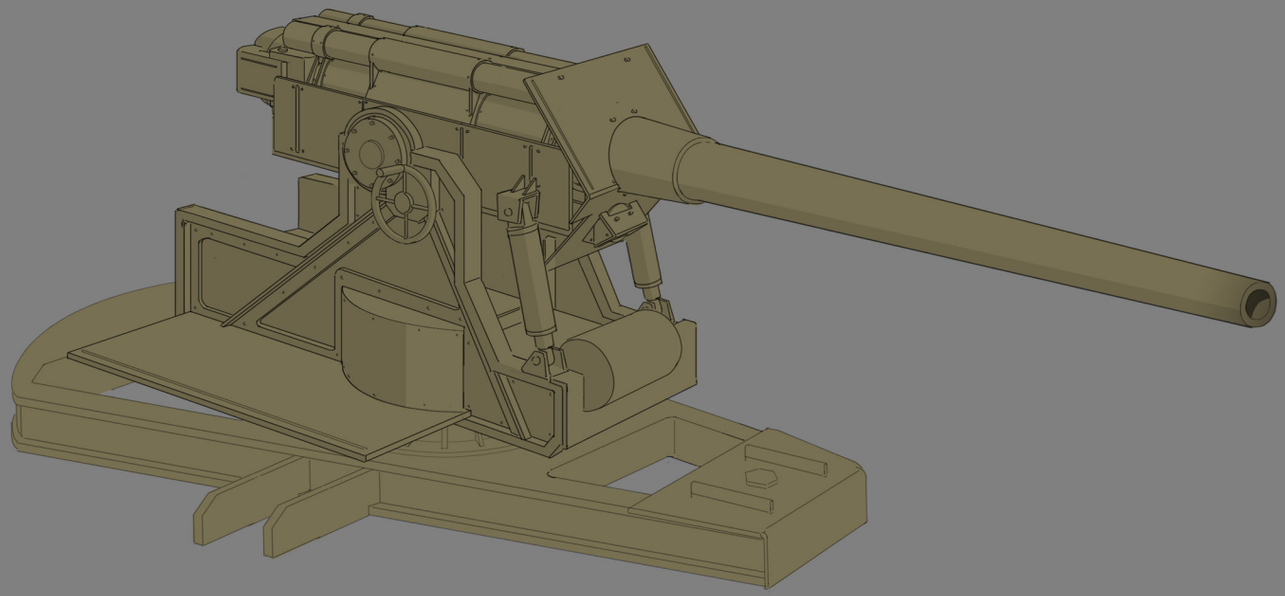

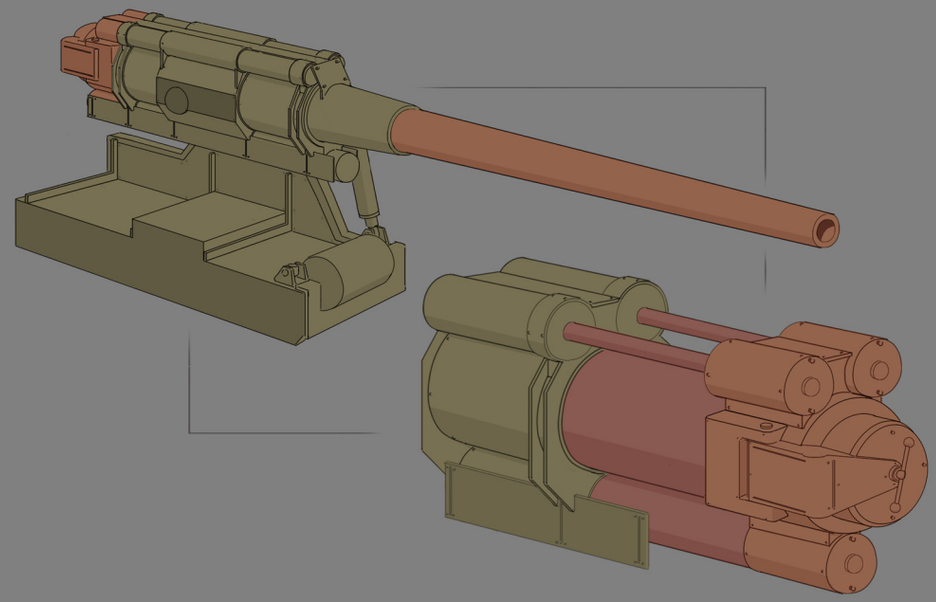

The Ruptura cannon was an exploration in how Colonial cannons would elevate. The existing emplacements had visible gears so we themed the Colonials with pistons.

This was also when the Colonial base or foot for the emplacement was designed. A key visual for the emplacements.

*Details and Alternate Cannon*

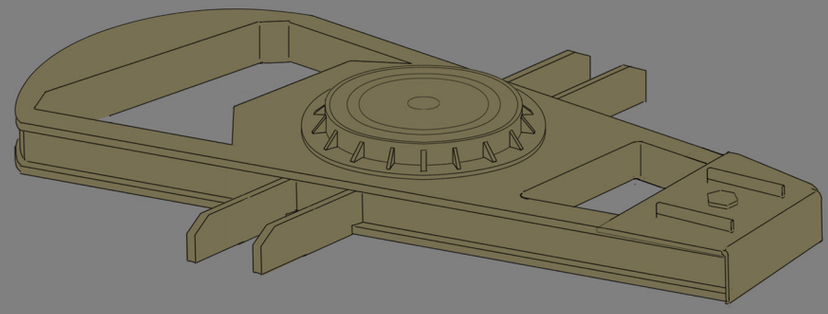

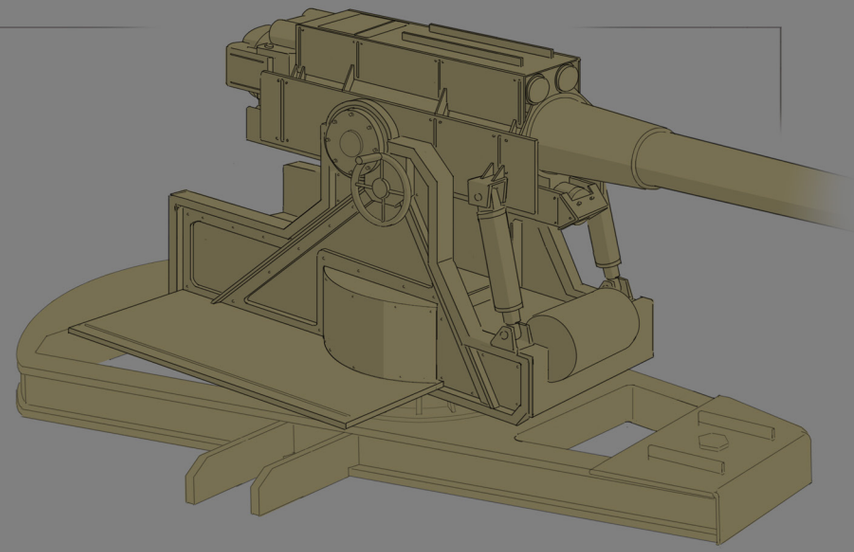

*50-500 Thunderbolt Cannon*

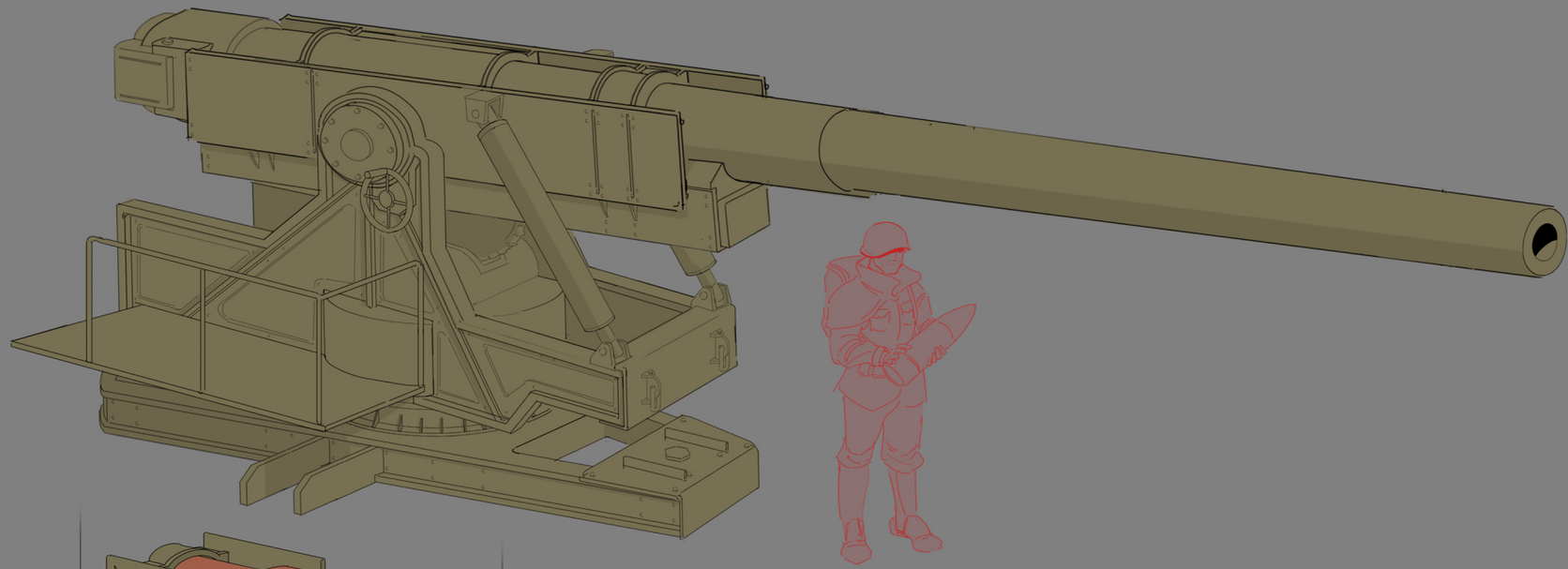

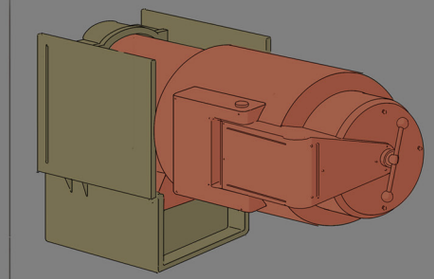

*Shield Variant*

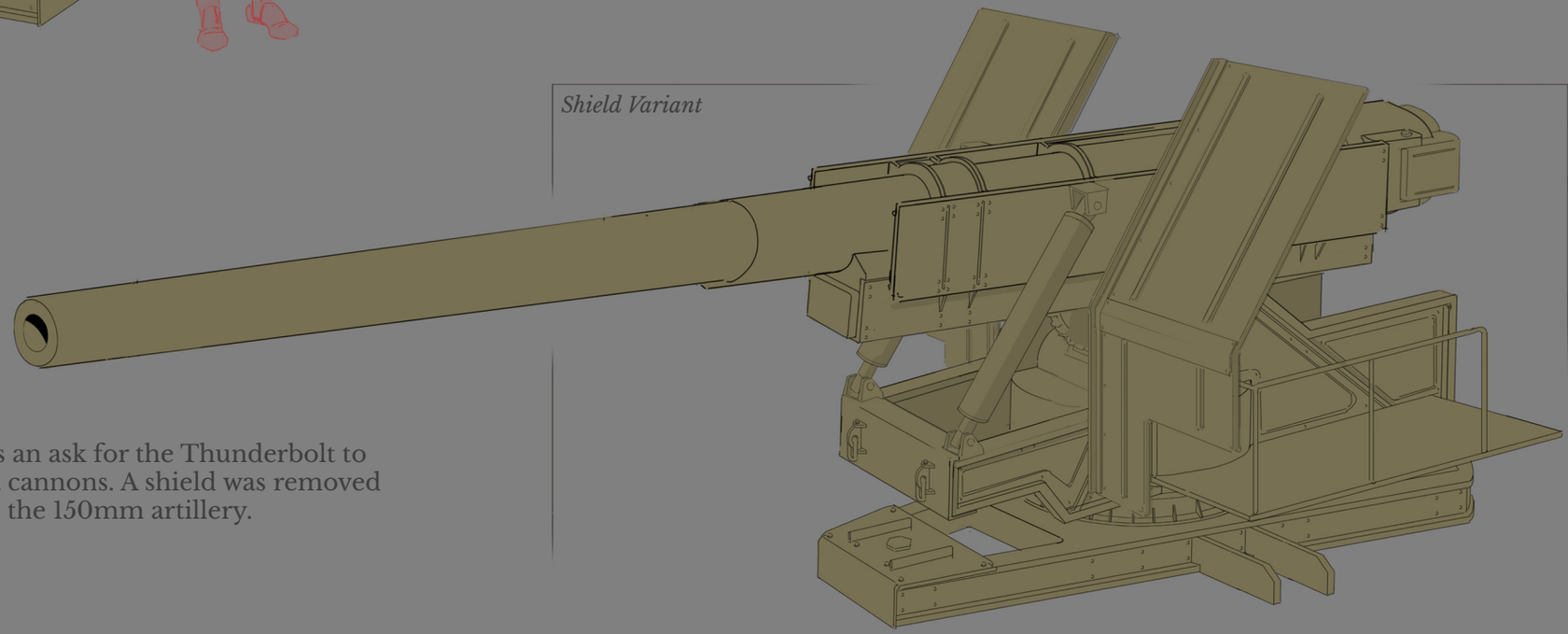

With the addition of 150mm artillery there was an ask for the Thunderbolt to have the longest barrel of all the Emplacement cannons. A shield was removed from the design for visual asymmetry between the 150mm artillery.

With the addition of rocket artillery we experimented with the idea of an emplacement option. The Hades' Net  meant to balance out the fact the colonial 120mm cannon was a Field Gun to the Warden 120mm Emplacement. The Wardens also had the mobile Wasp Nest so it made sense to try this rocket artillery as an emplacement.

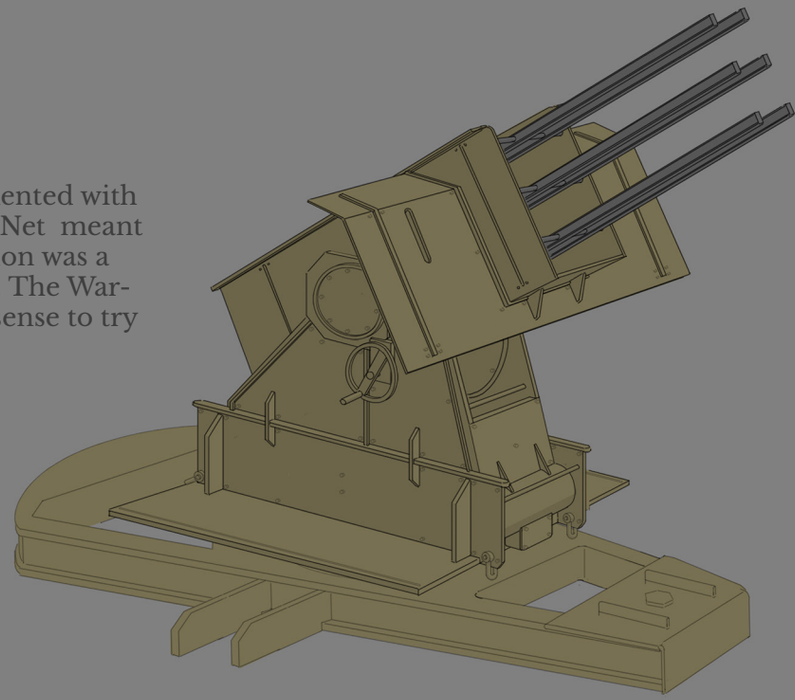

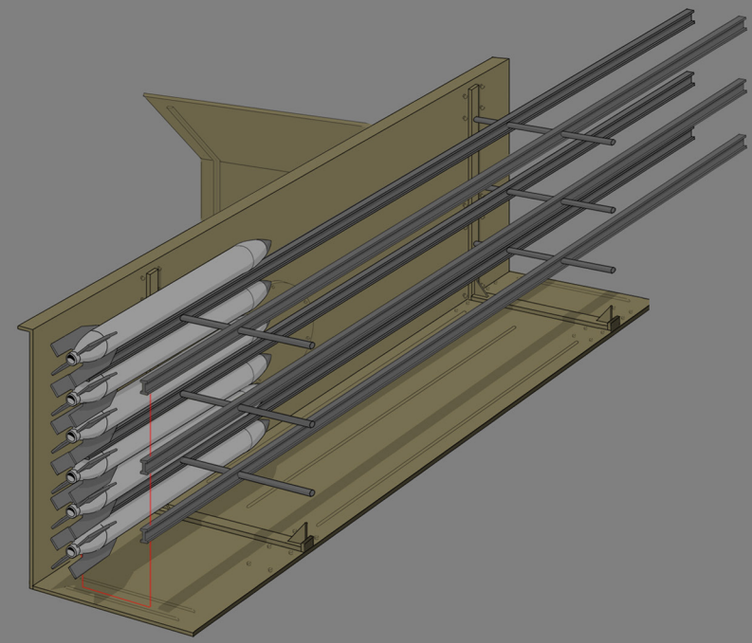

*Alternate Designs*

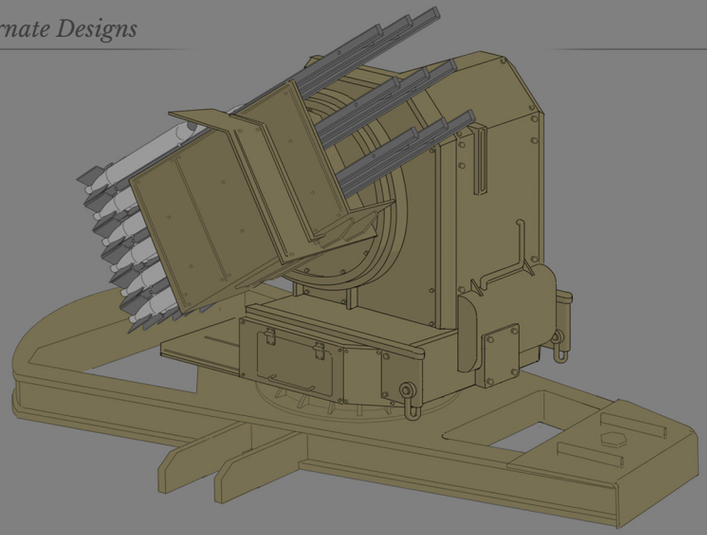

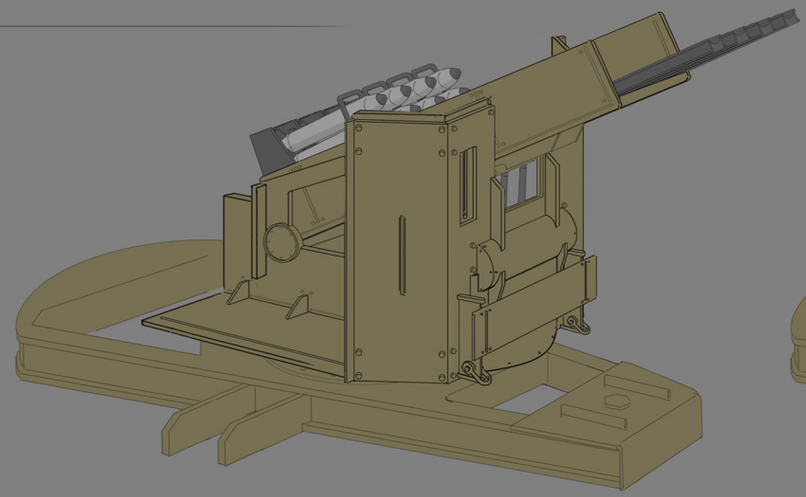

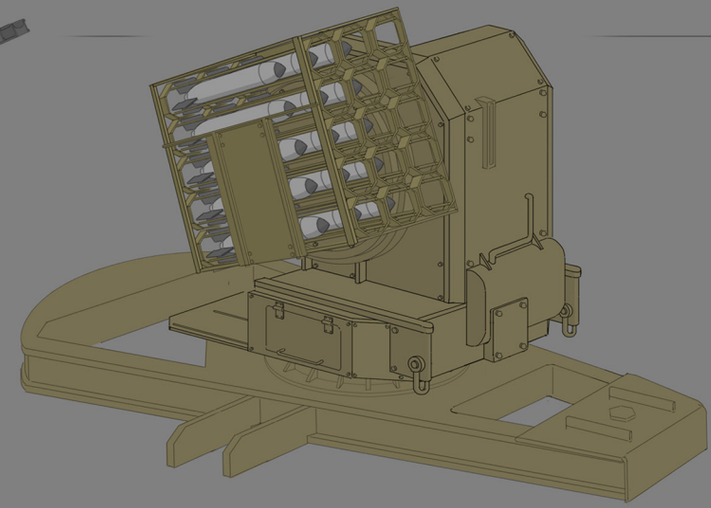

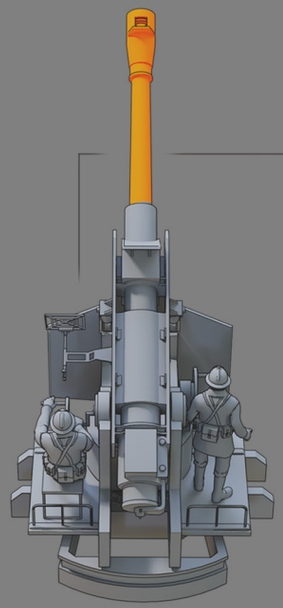

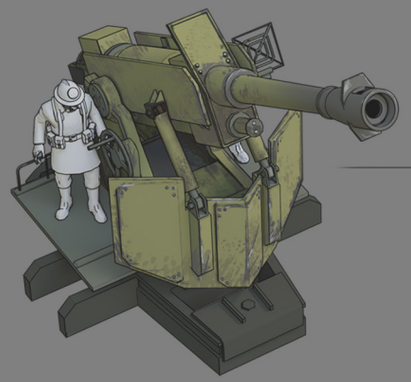

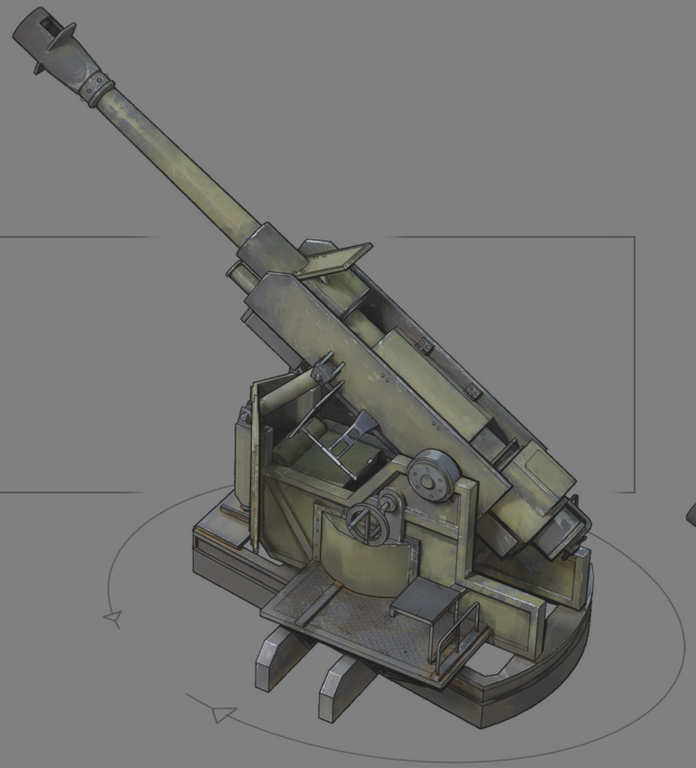

*DAE 5b Zeal*

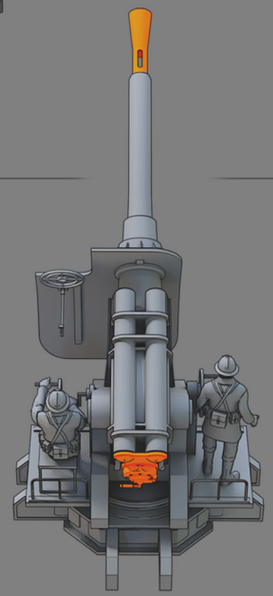

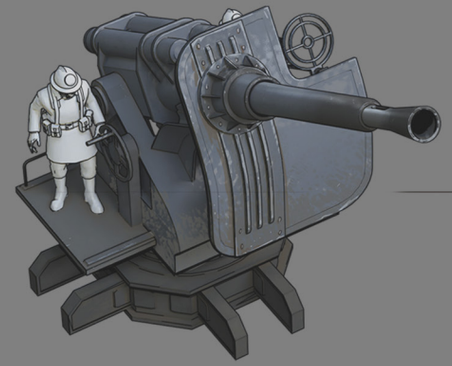

*Leary AA-70 Bolas*

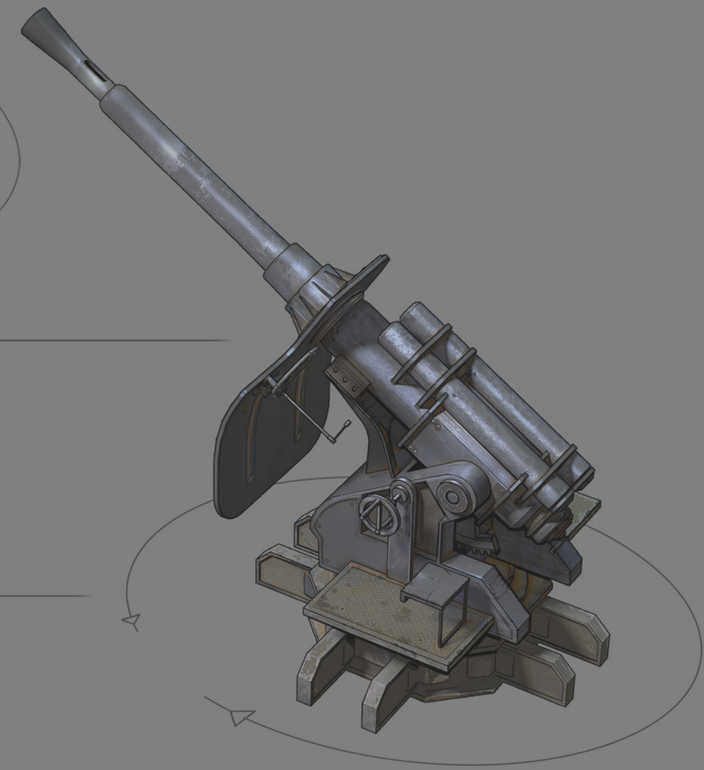

To help with the breadth of content in Airborne, another concept artist was brought on to help. Steve brought an expertise in concepts modeling.

With multiple years of design work to reference, his adaptation to the visual language of both factions has been quick.

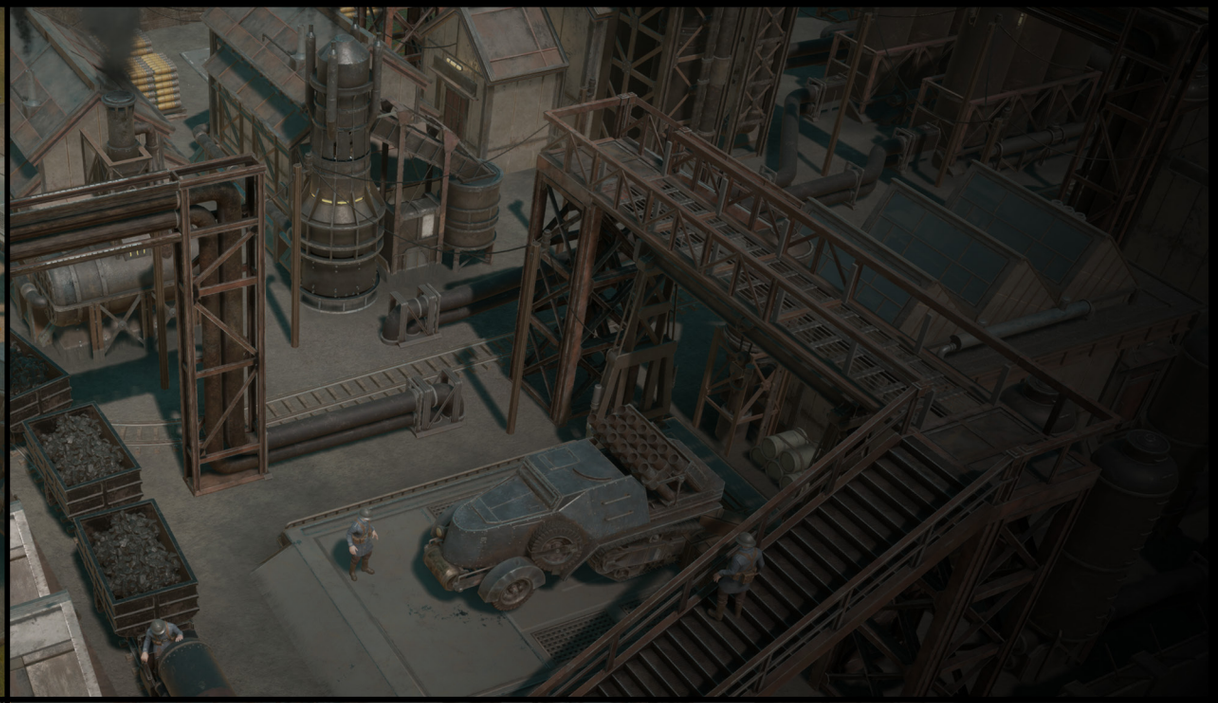

# Facilities

Facilities lay the foundation for Foxhole by inviting players to invest in the world. When bases are built, it creates an emotional connection to the location for the player and any other player who meaningfully interacts with it. This is why we designed Facilities to be a collaborative effort. The more players who get involved, the more important a place becomes, the more devastating it is when it is attacked and destroyed. -Max

*Original Large Power Plant*

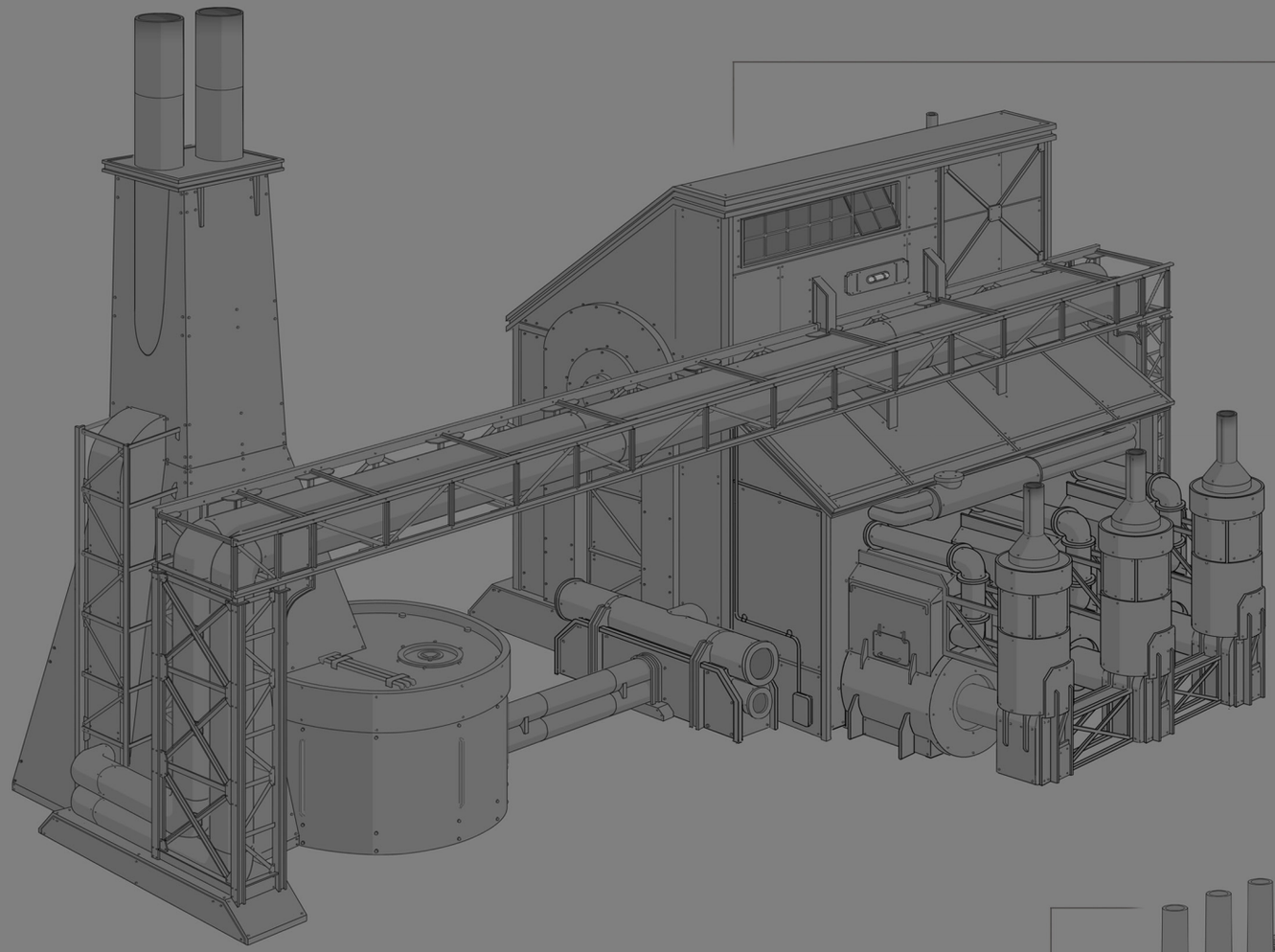

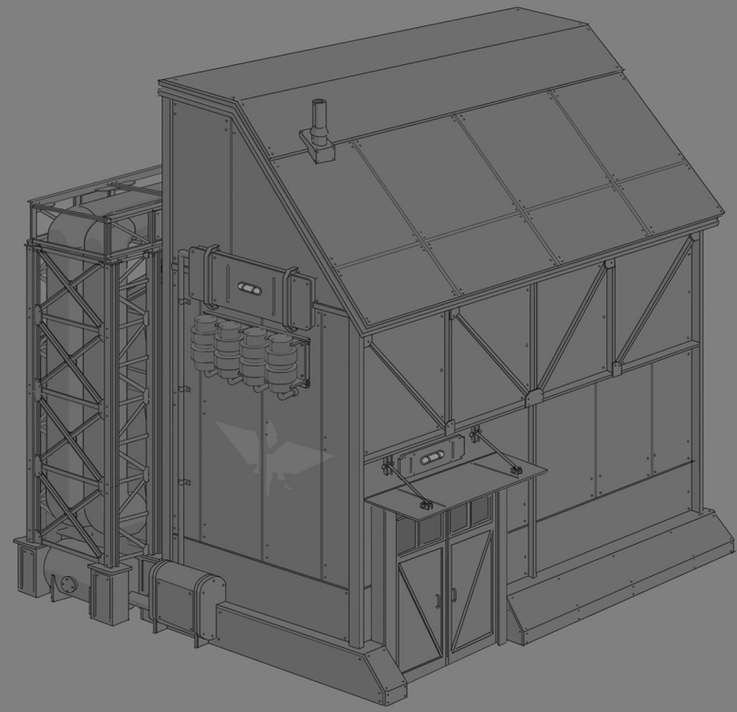

## Facility Concept Art

Facilities were added in Inferno and expanded the production game into an expansive player-driven activity where players could construct industrial areas complete with refineries, assembly stations, mine carts, and pipe systems. Concept work on the facilities was a daunting task.

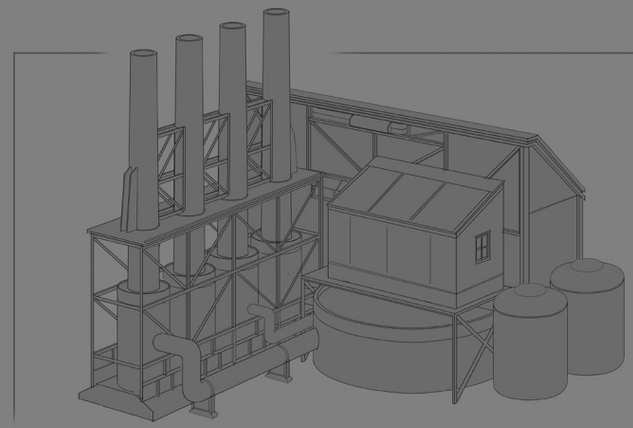

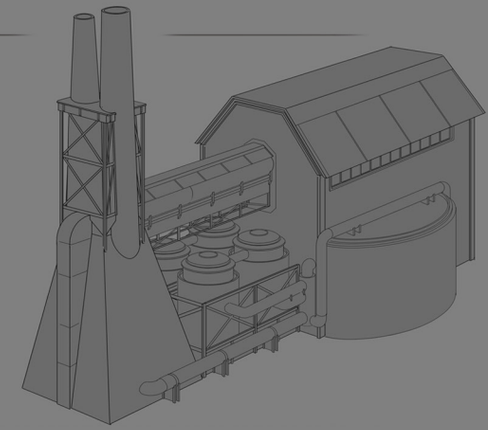

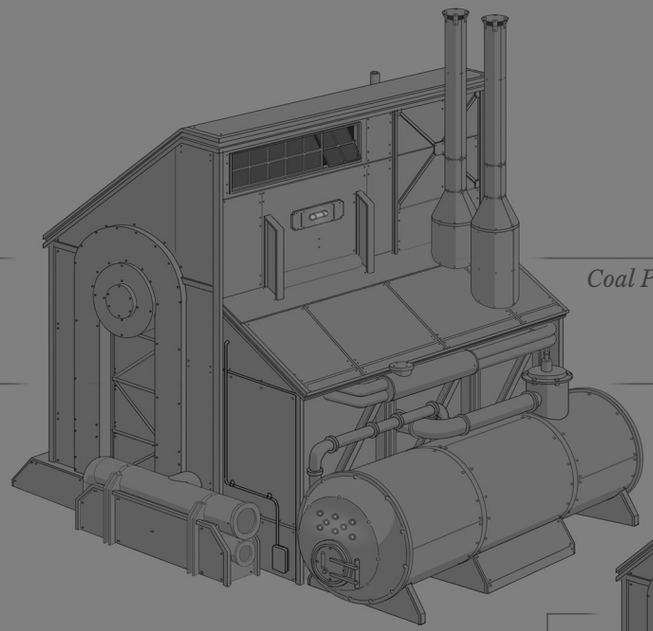

*Coal Power Plant*

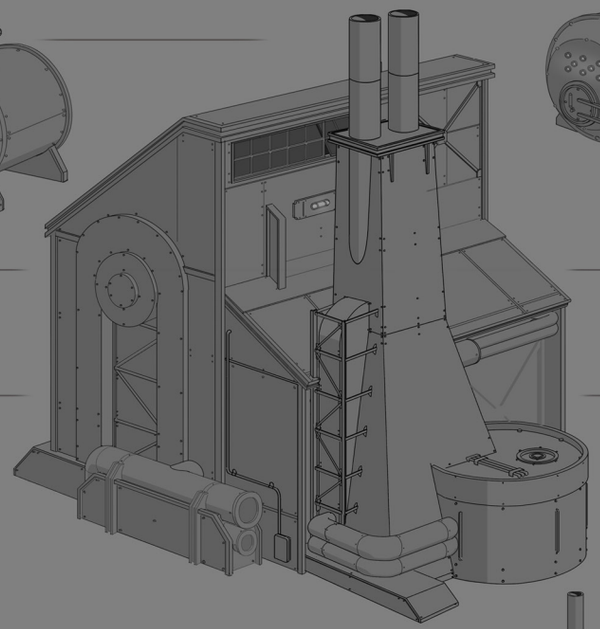

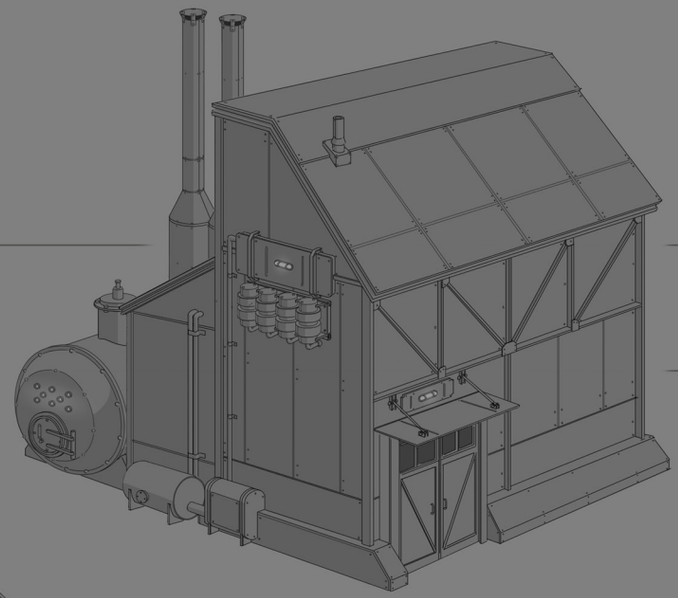

*Petrol Power Plant*

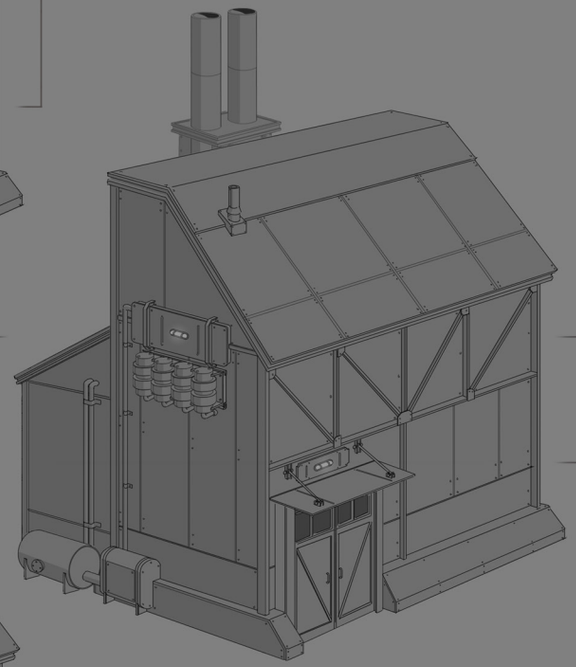

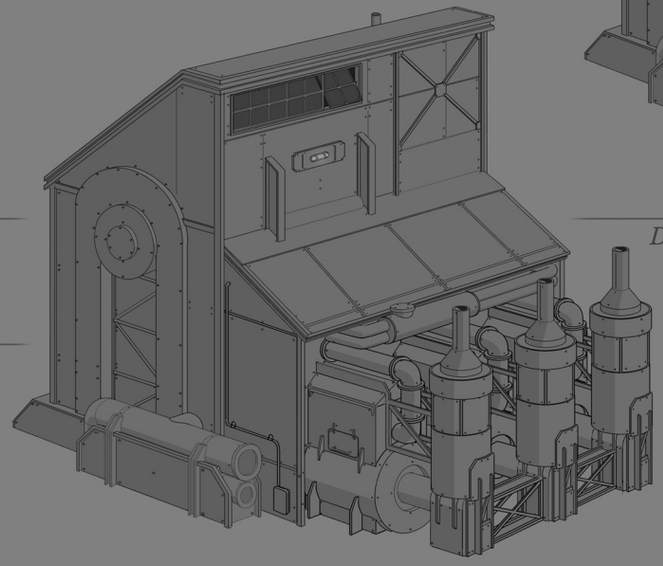

*Diesel Power Plant*

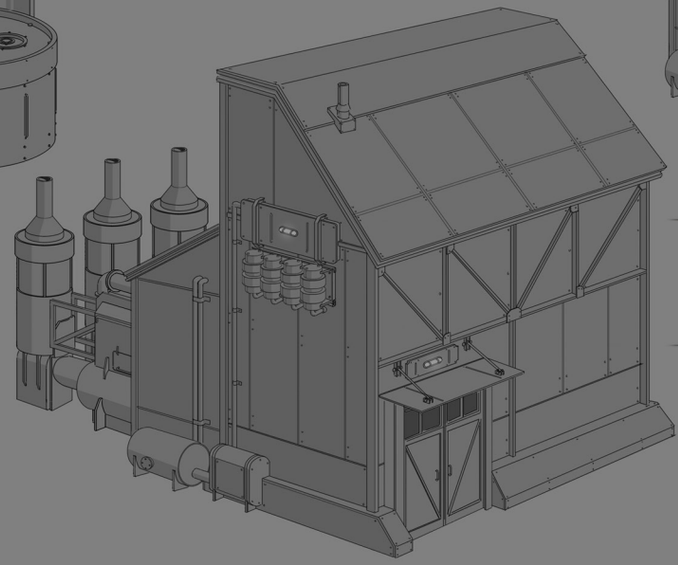

*Power Station*

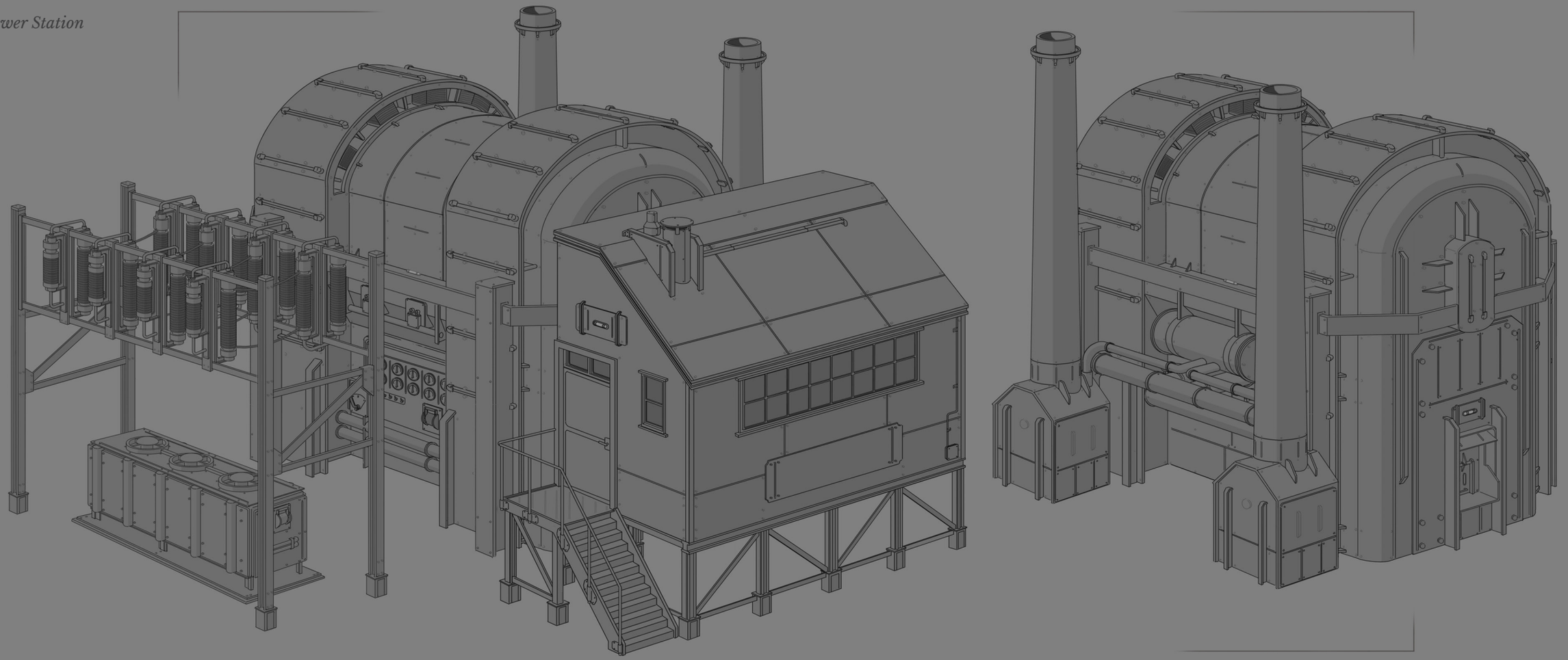

At this stage in the game's development, the concept art took on a high technical drawing style. The change to the overall vision of the Facilities feature expanded its scope greatly. Features and new buildings were being added throughout this development time. In order to speed things up, there was a plan to have a set of textures worked out with the modeler. The plan was to complete a singular building that would be fully textured to act as a guide for the rest. While this had its own issues, overall the textures and colour palette were designed to not resemble any of the existing towns in the game. We balanced a thin line - we wanted some old rusting buildings, not so ruined as to look derelict and abandoned. They should be built for war, but not in some apocalyptic world.

*Sulfuric Reactor*

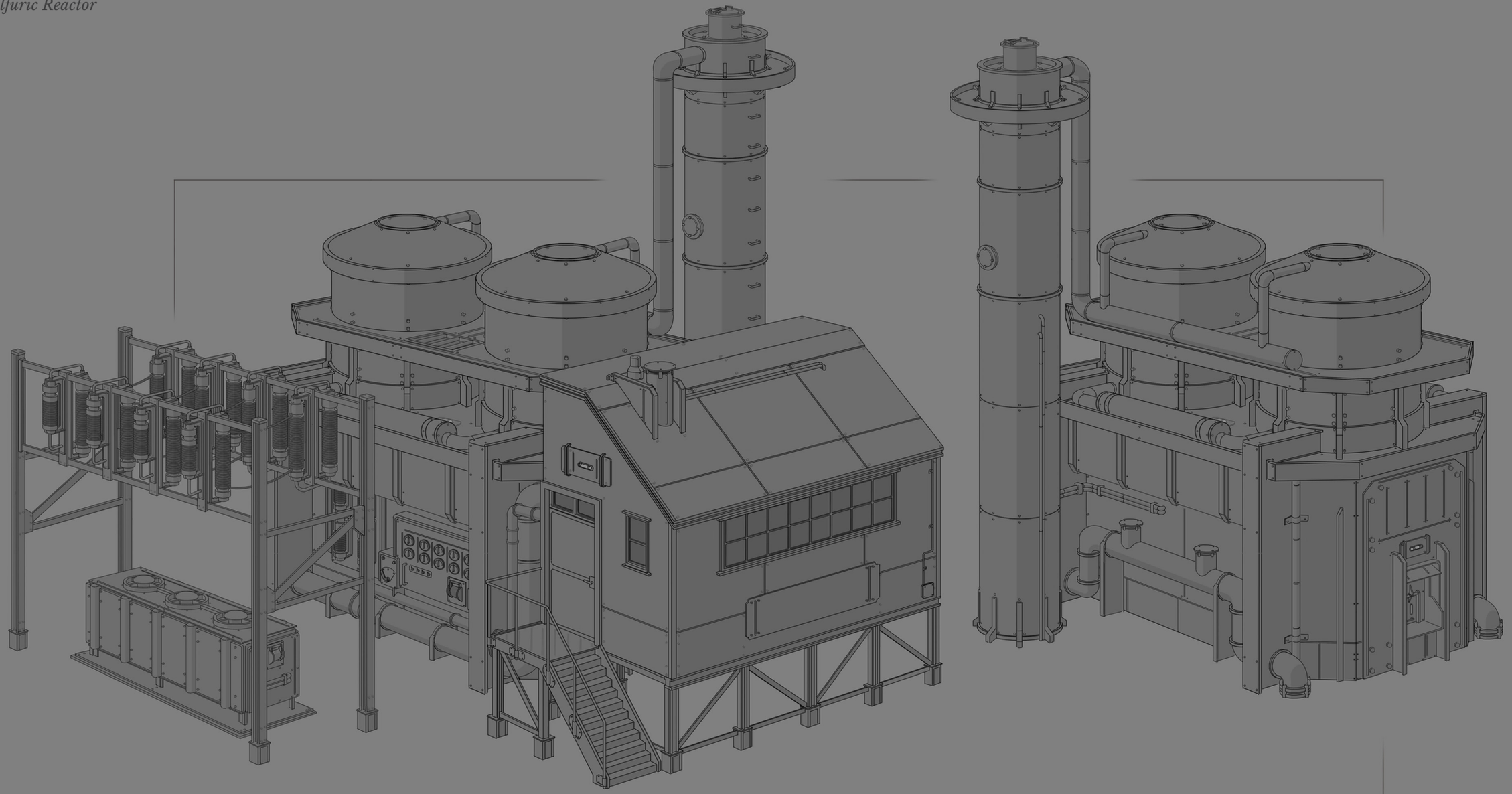

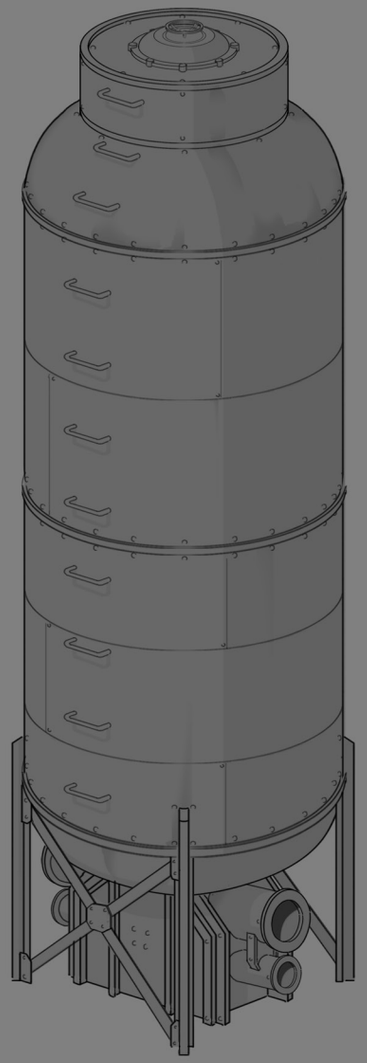

*Liquid Silo*

A lot of the work was designing alterations to the Facilities. A large flow chart of recipes for what each building would make was created by the game designers. This was a giant complex undertaking for all.

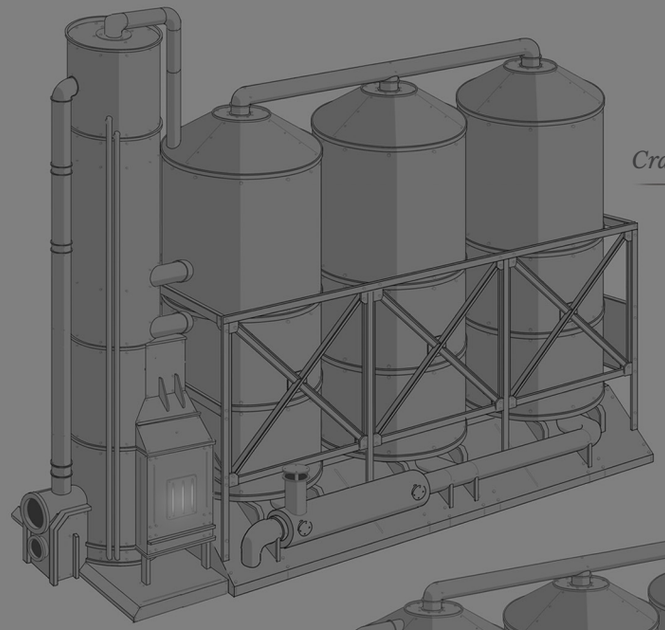

*Cracking Unit*

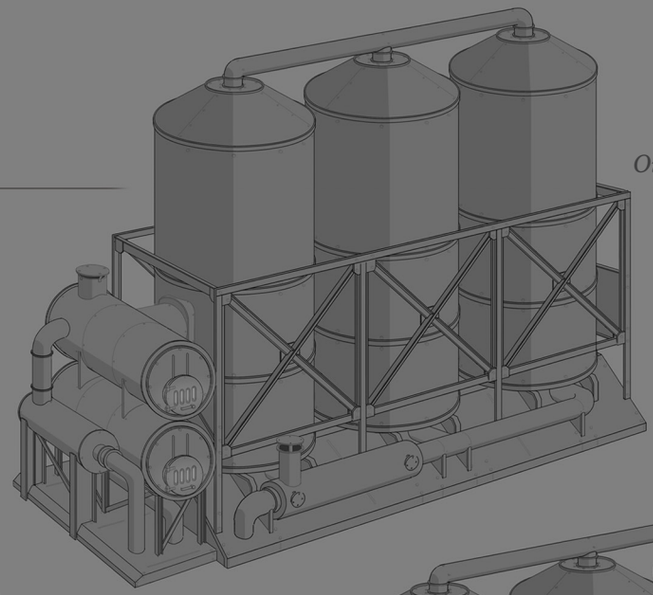

*Oil Refinery*

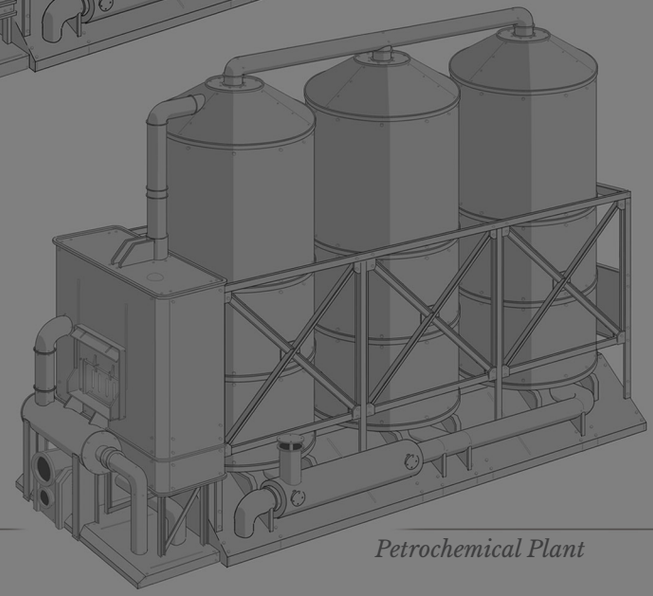

*Petrochemical Plant*

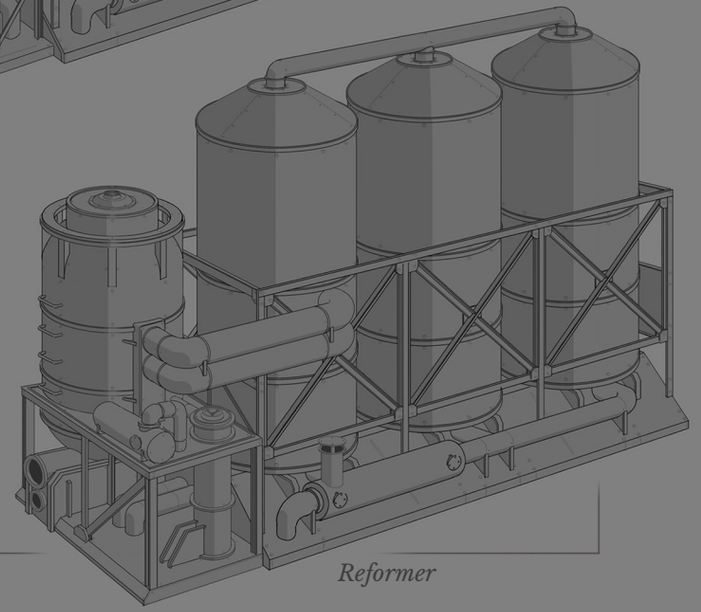

*Reformer*

*Liquid Transfer Station*

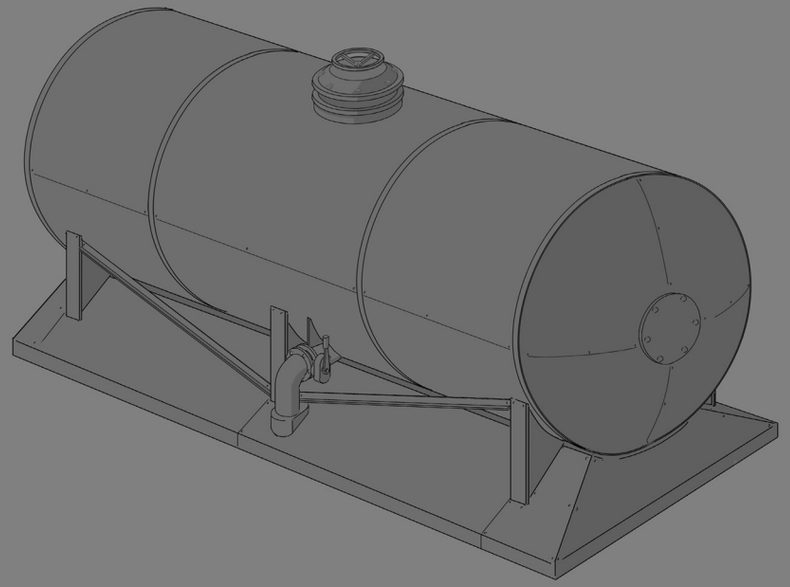

The oil pipeline system came with a request; that the lines act like waist high walls players could use as cover and vault over. This made sense since they might stretch vast distances.

This is actually why the design has two lines on top of each other. So the model looks like you could take cover behind it.

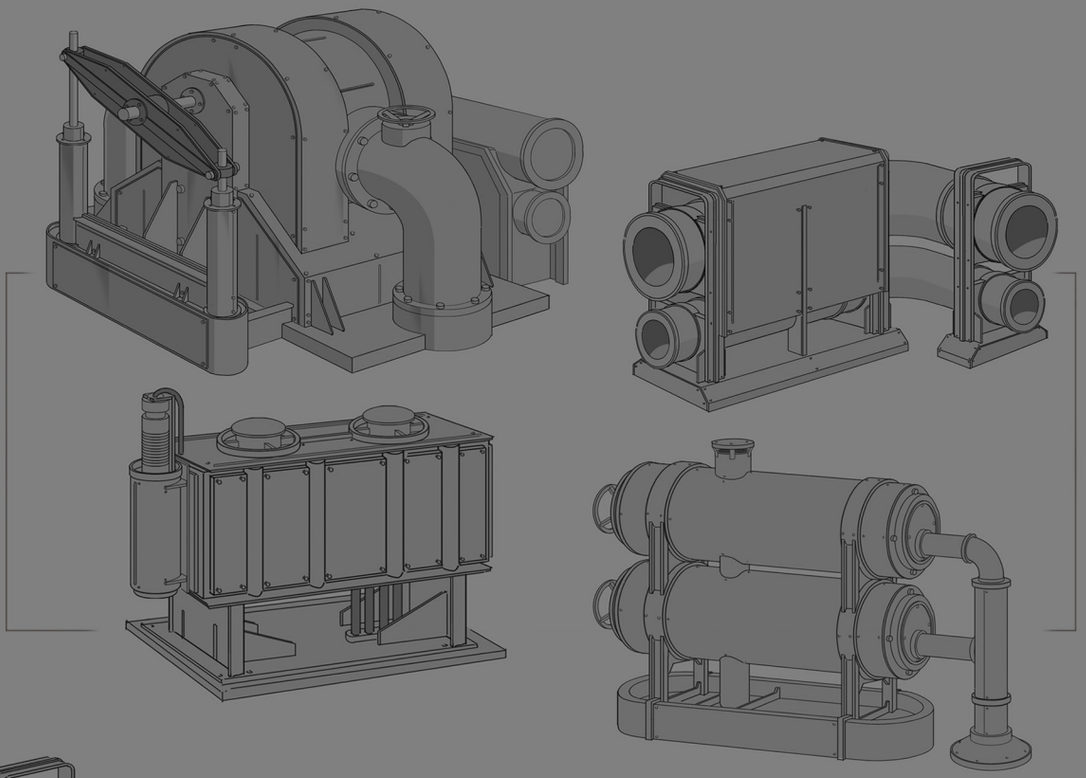

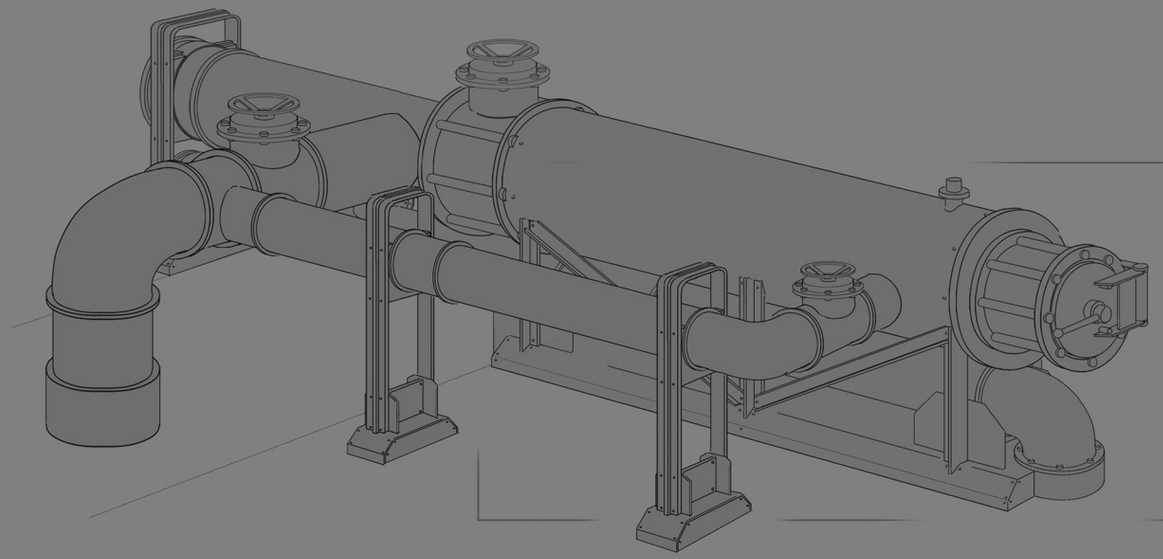

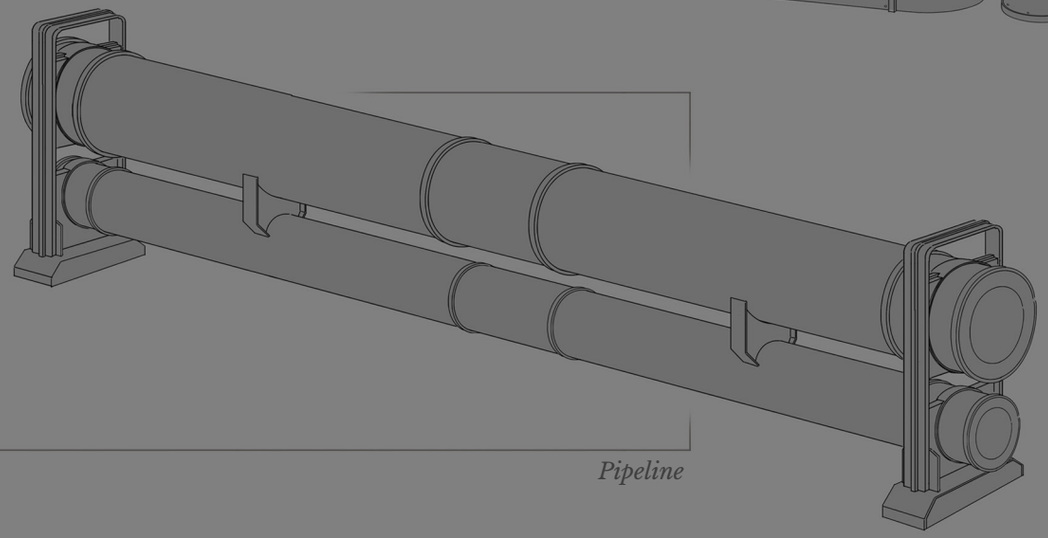

*Pipeline*

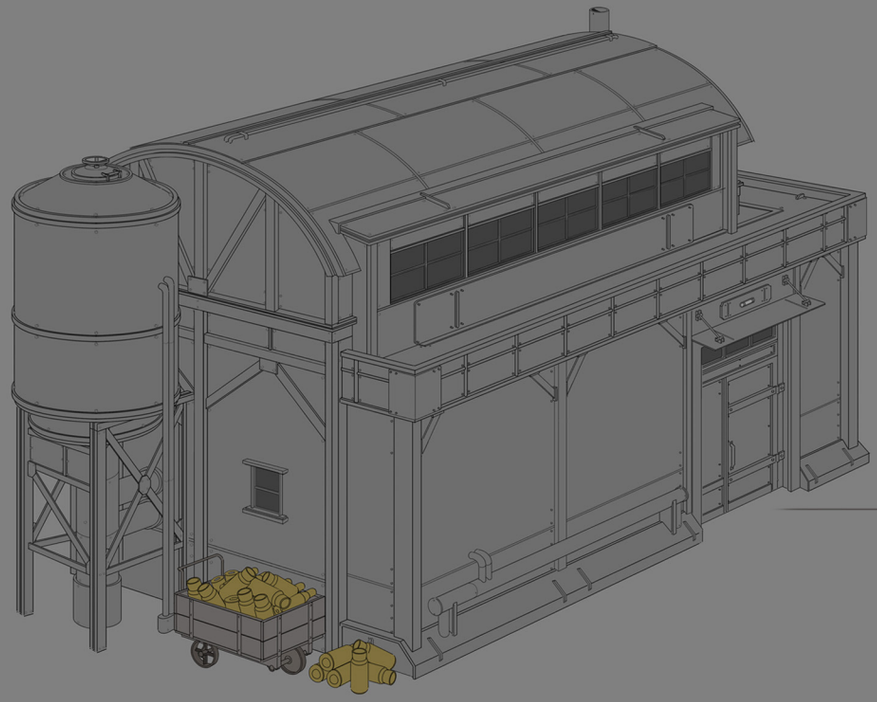

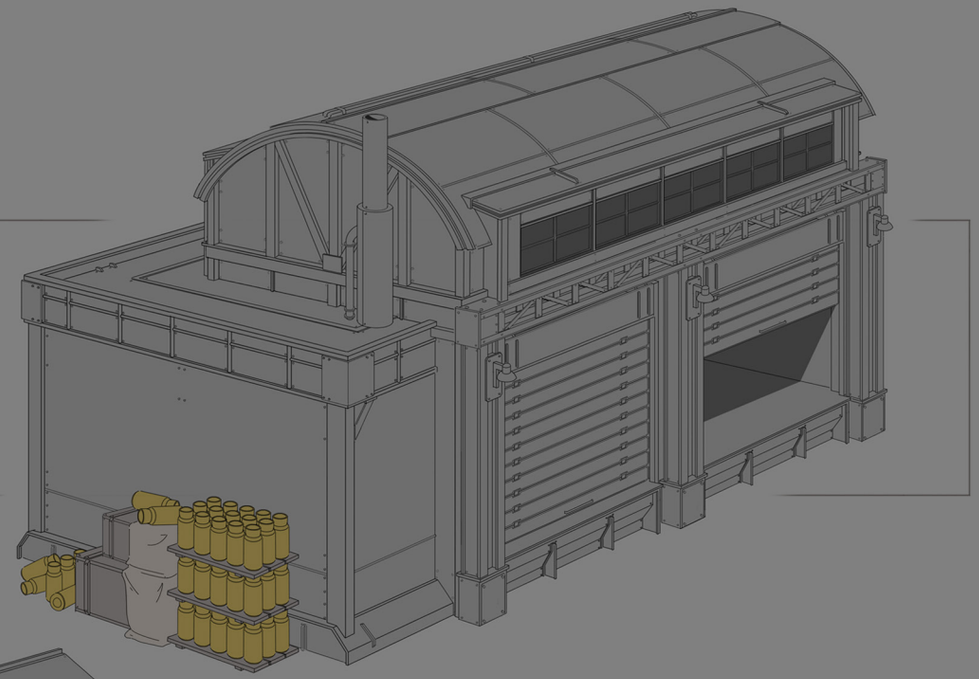

*Large Shell Factory*

With the initial change to the plan, the scale of the buildings had to be worked out. We had to design them abstractly. Their scale wasn't large enough to actually look functional. They are far closer in size to sheds than factories and warehouses, but they had to feel correct. We still wanted to maintain a feeling that you are building an industrial complex.

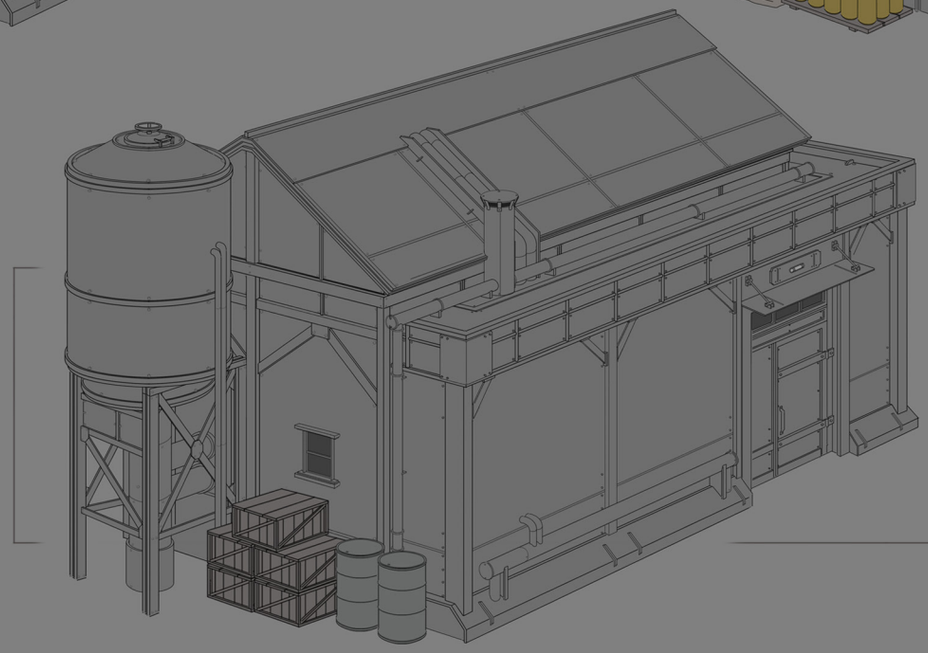

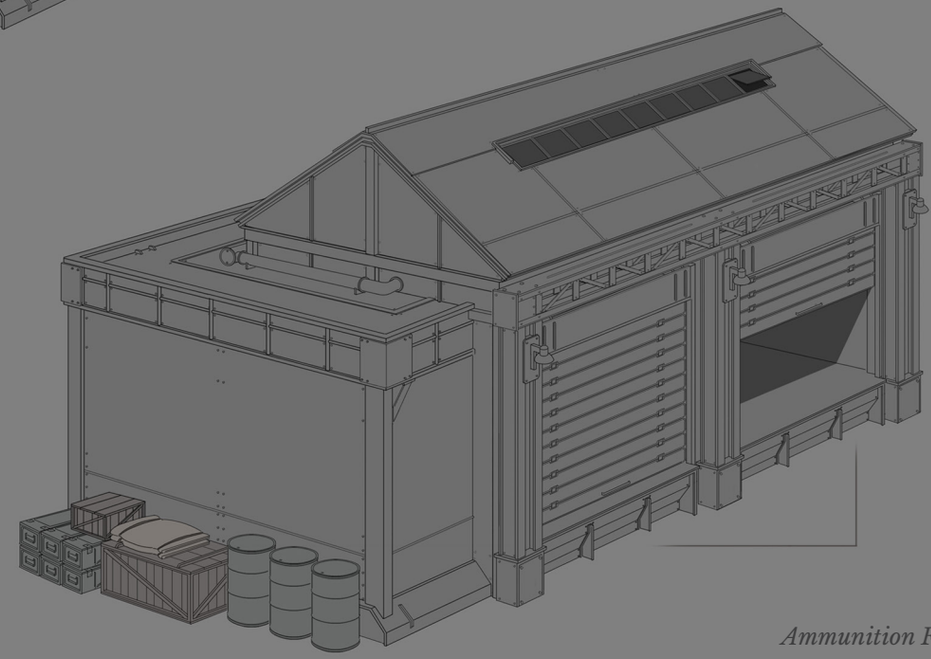

*Ammunition Factory*

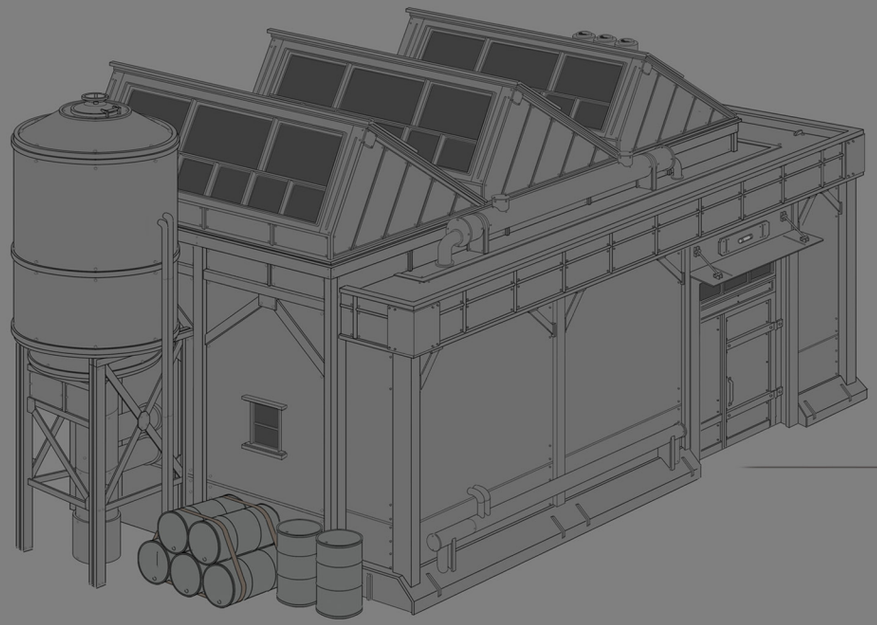

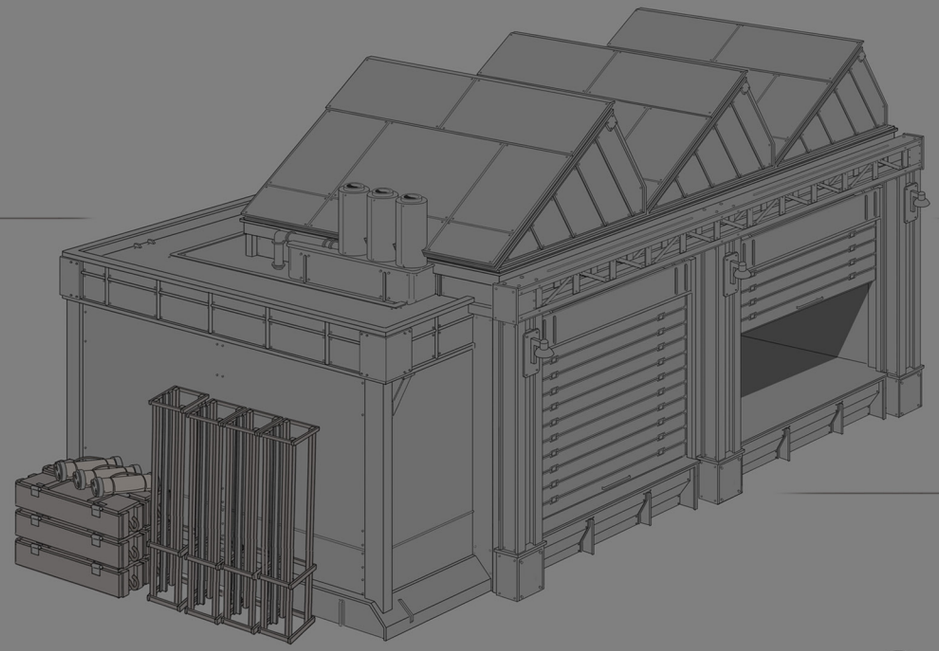

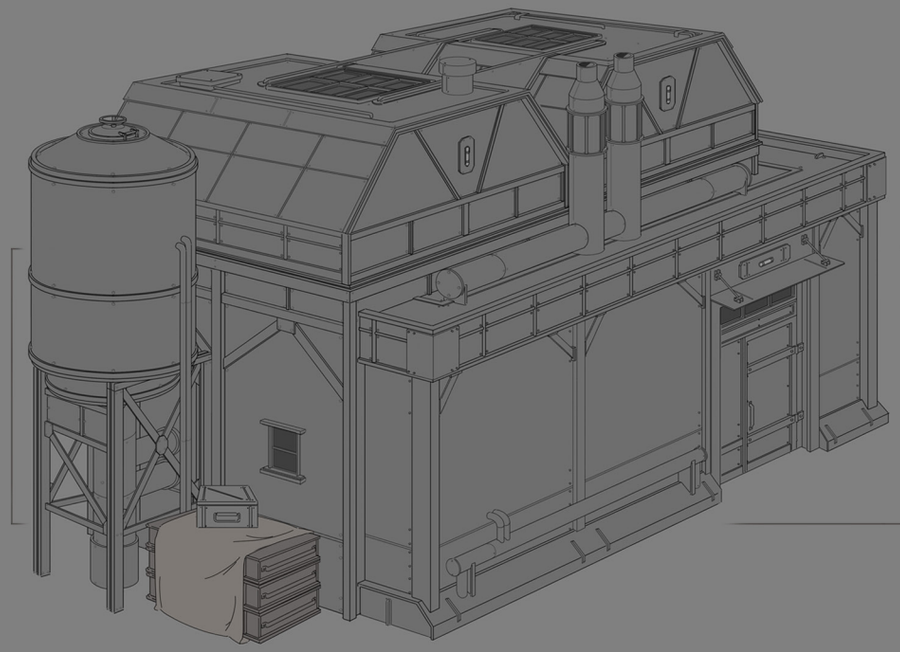

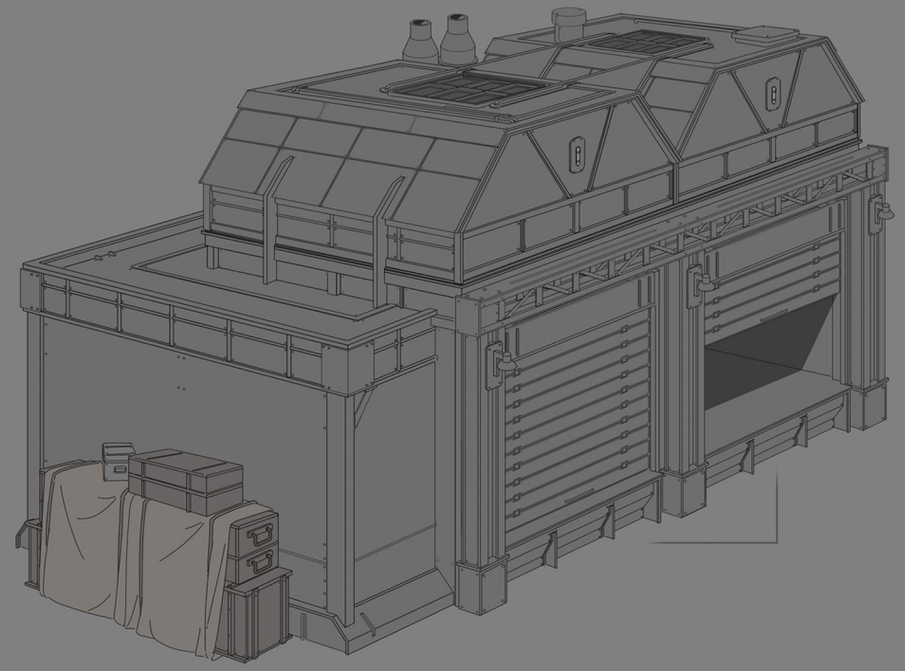

Like in the rest of the game, roofs were very important. Simply because of the nature of the game's camera, you would be spending most of your time seeing the roofs of the facilities. So attention was given to vary them up in interesting ways.

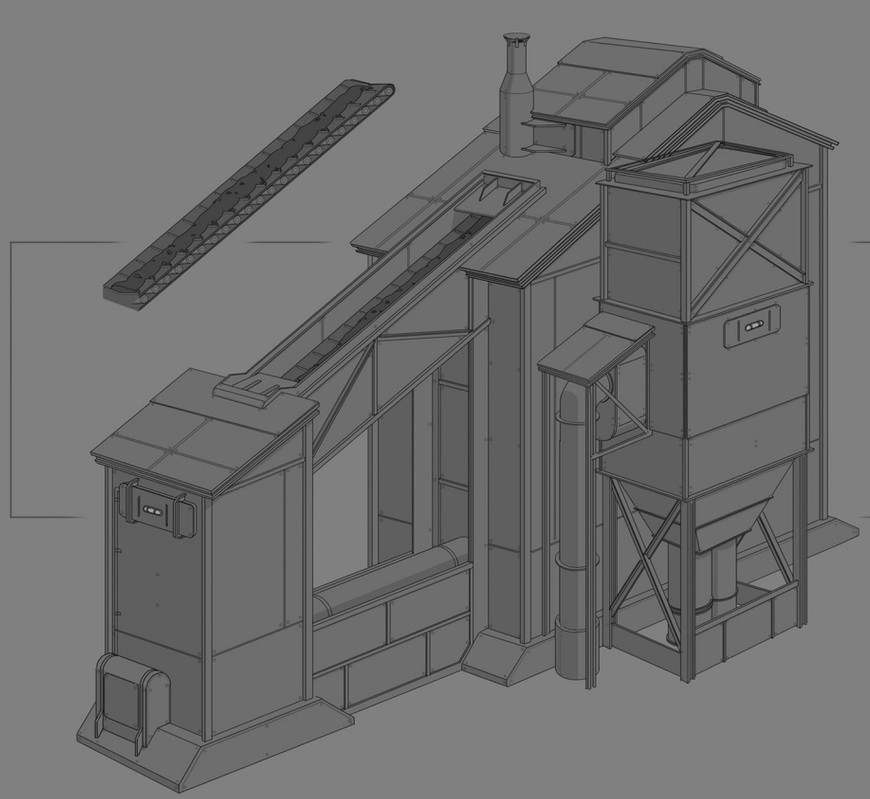

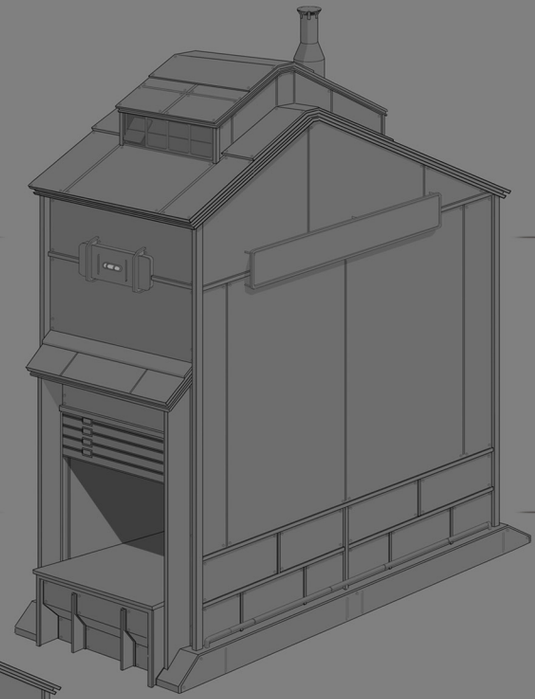

*Coal Refinery*

Another issue that had to be considered was that the footprint shape of each individual building could not change as the player upgraded them. It would create an unplayable mess if players didn't know how to lay down their facilities before they started to modify them. The designs needed to stand out while not changing too much.

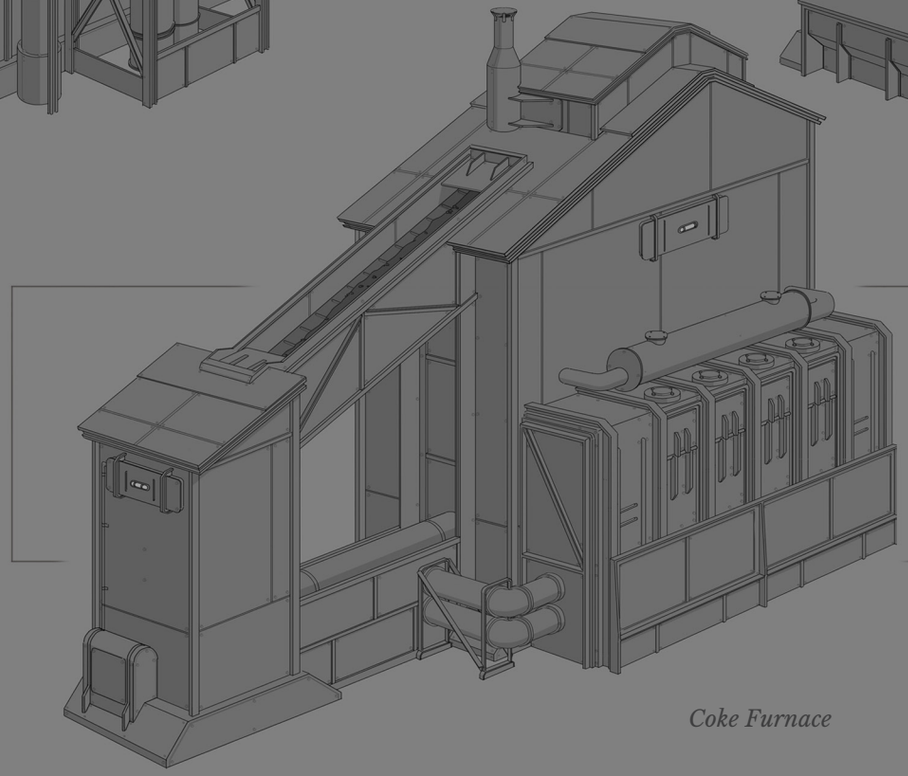

*Coke Furnace*

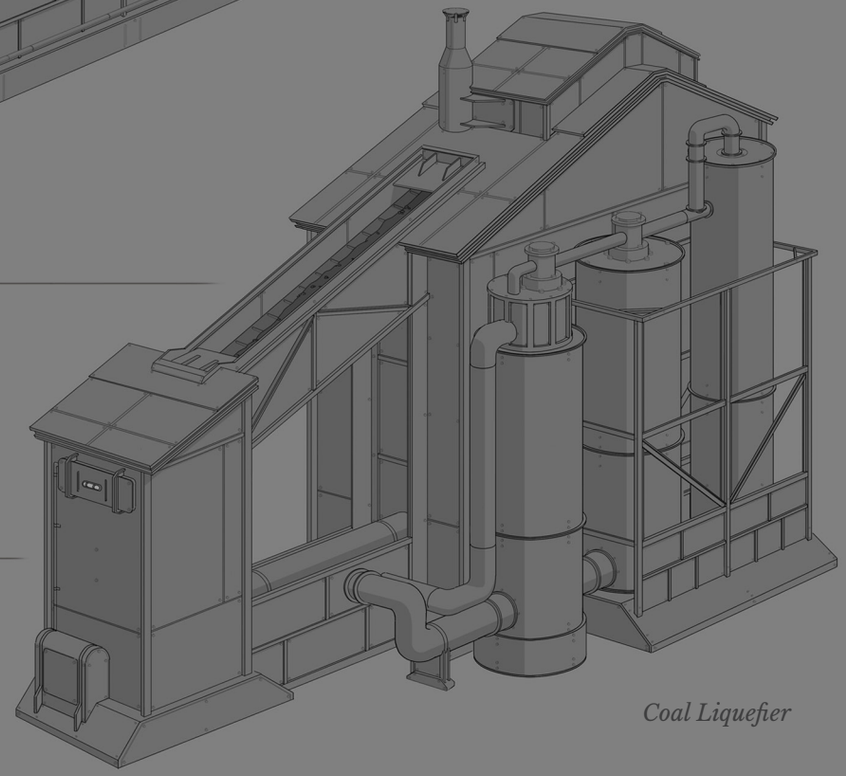

*Coal Liquefier*

*Forge*

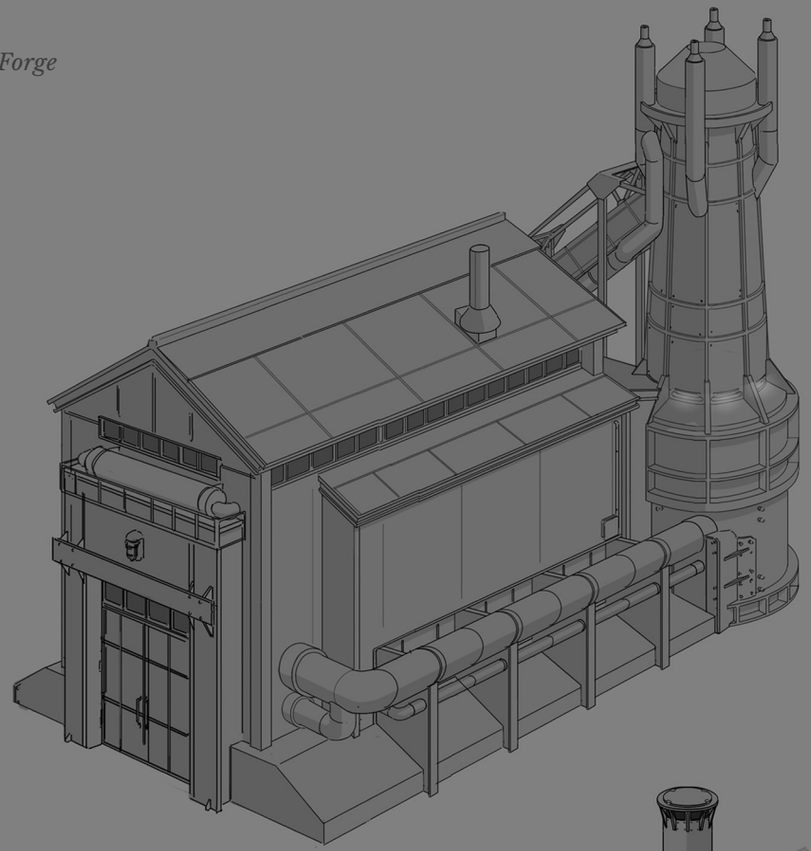

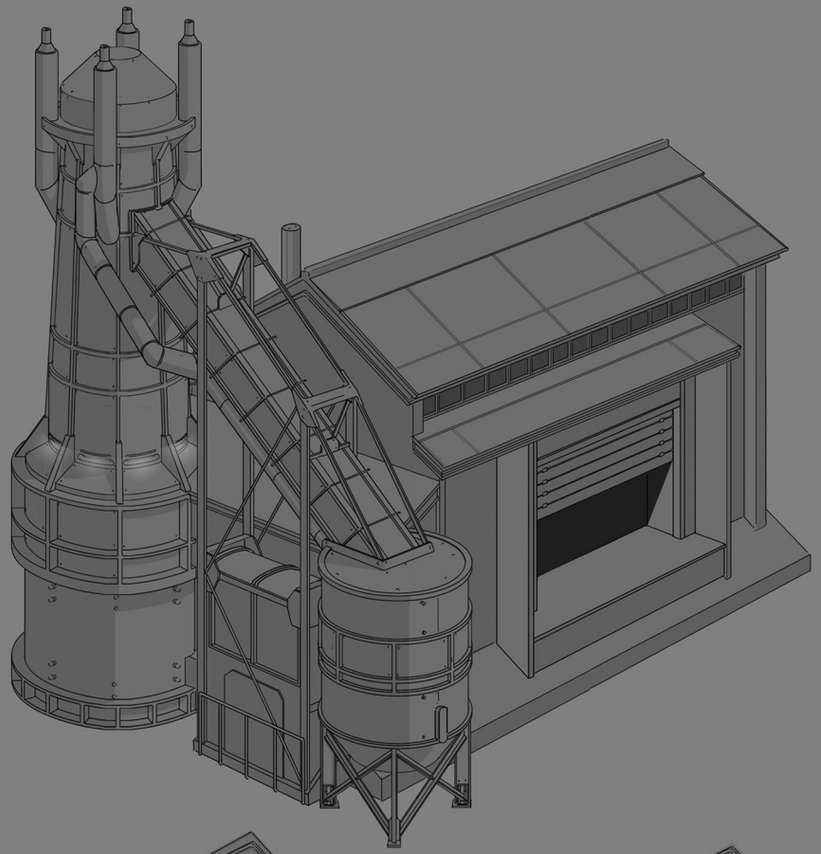

Bringing some life to the building was also important. We wanted to capture a feeling that your facilities were working and the industry of war was alive. Like the rest of Foxhole we wanted it to feel grounded, no cartoony animation or big neon lights. Careful attention was considered for each modification that animated.

This feature also helped with the addition of power lines. It was not clear at the beginning that running power to each individual building would be part of the final product. When it was confirmed, it added to the idea of a living area, and the lights coming on would be good visual feedback for the player.

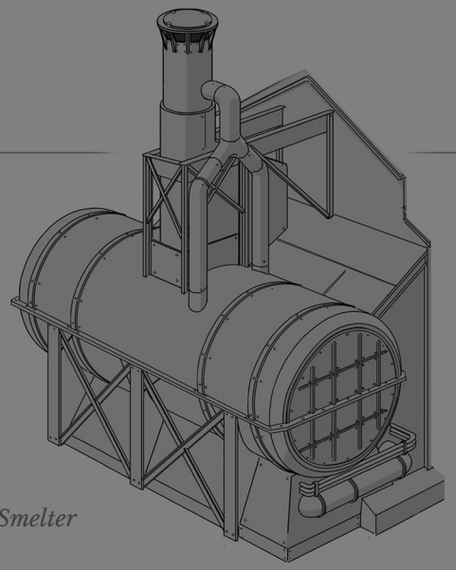

*Smelter*

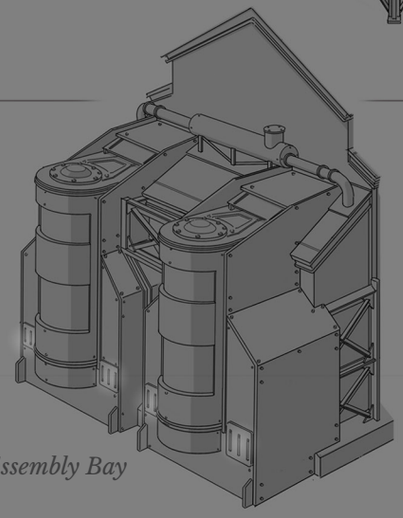

*Assembly Bay*

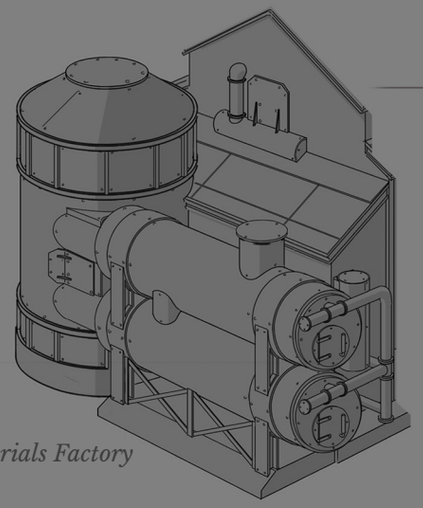

*Materials Factory*

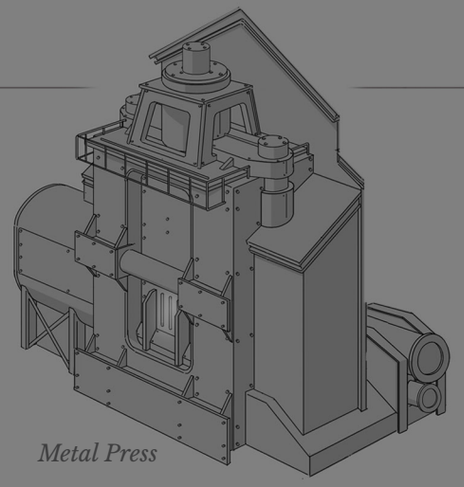

*Metal Press*

*Engineering Station*

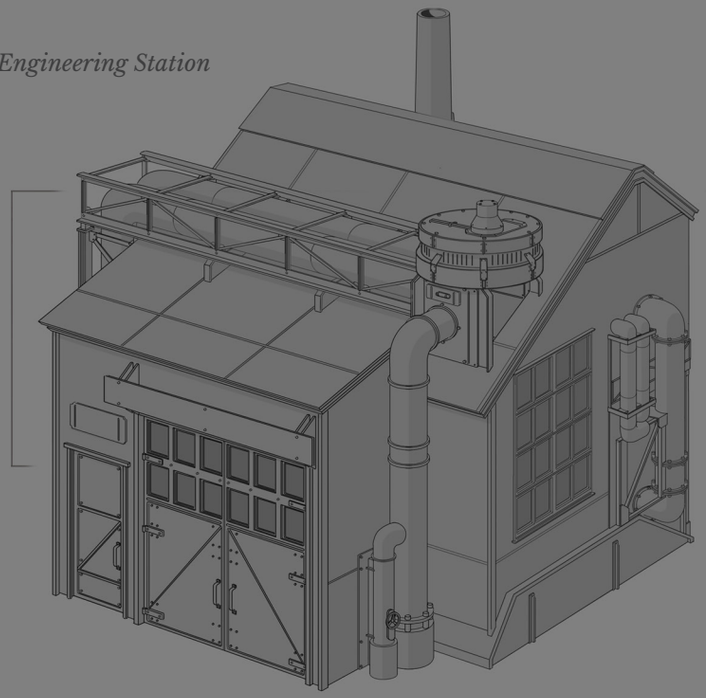

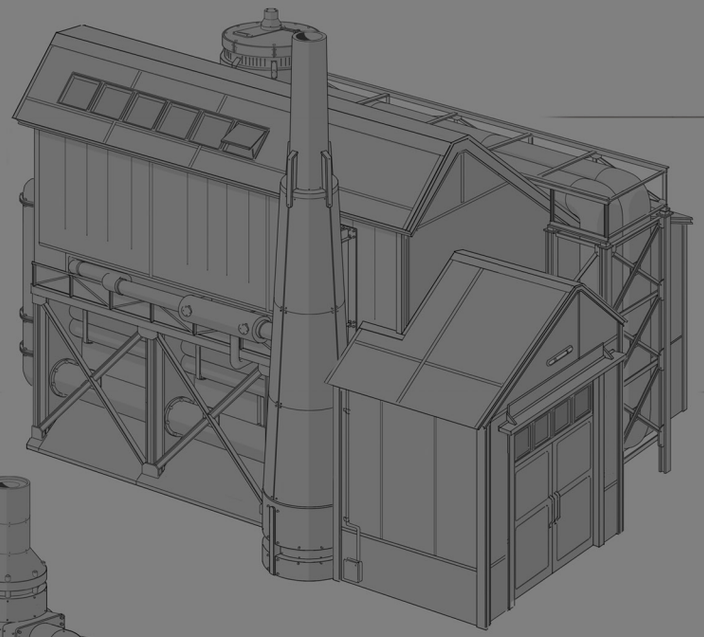

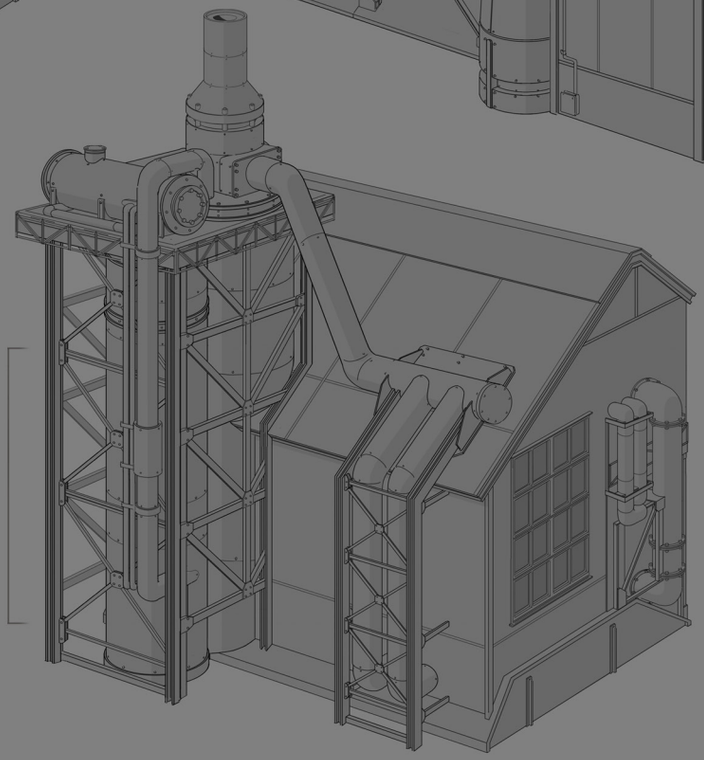

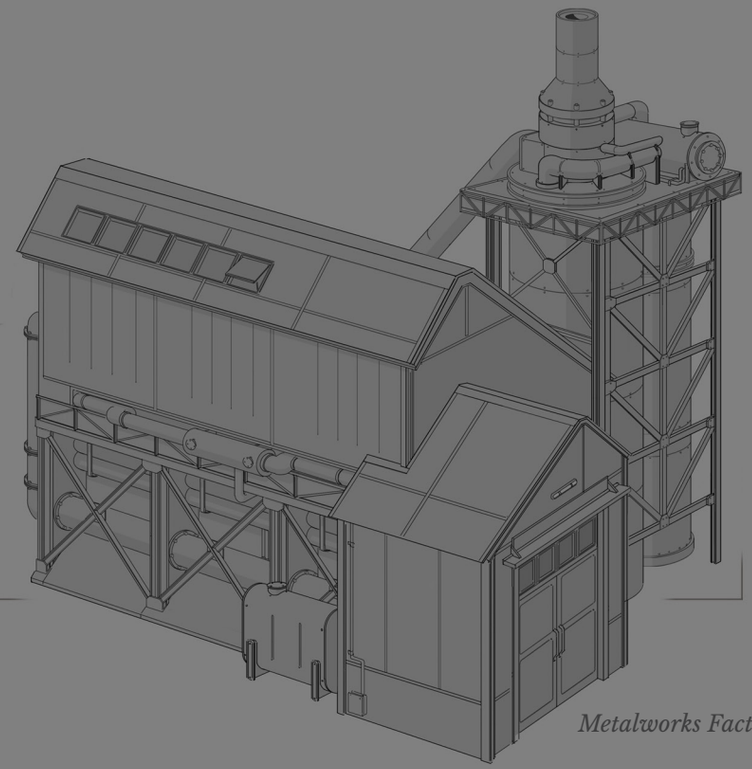

*Metalworks Factory*

For the team, this feature was akin to adding a game into another game in complexity. Industrial zones the size of towns could be built, letting players create their own objectives that are important enough to fight over and defend.

*Recycler*

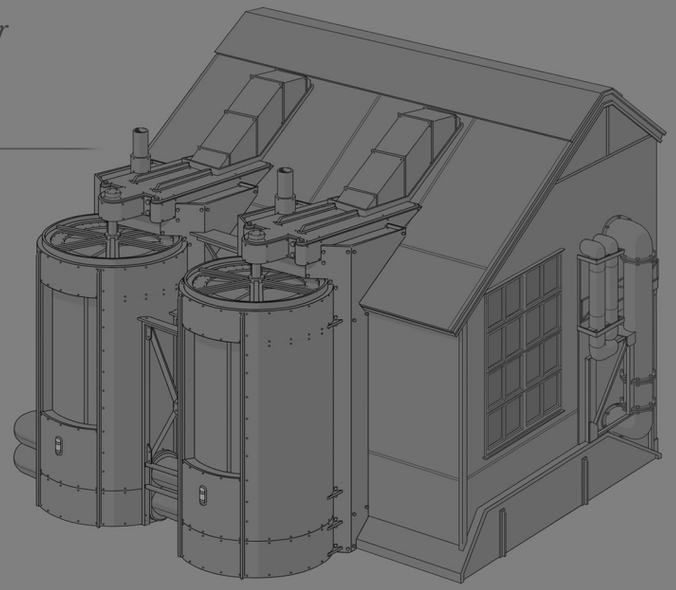

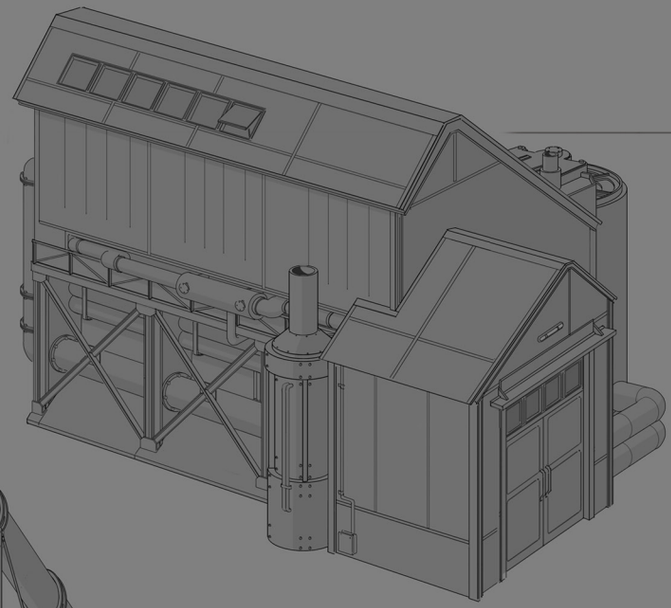

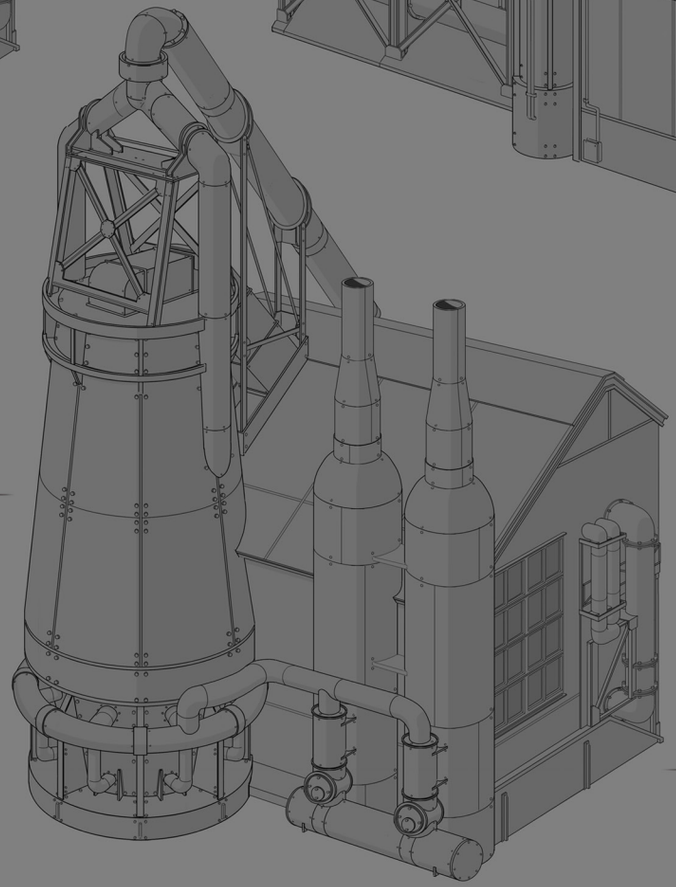

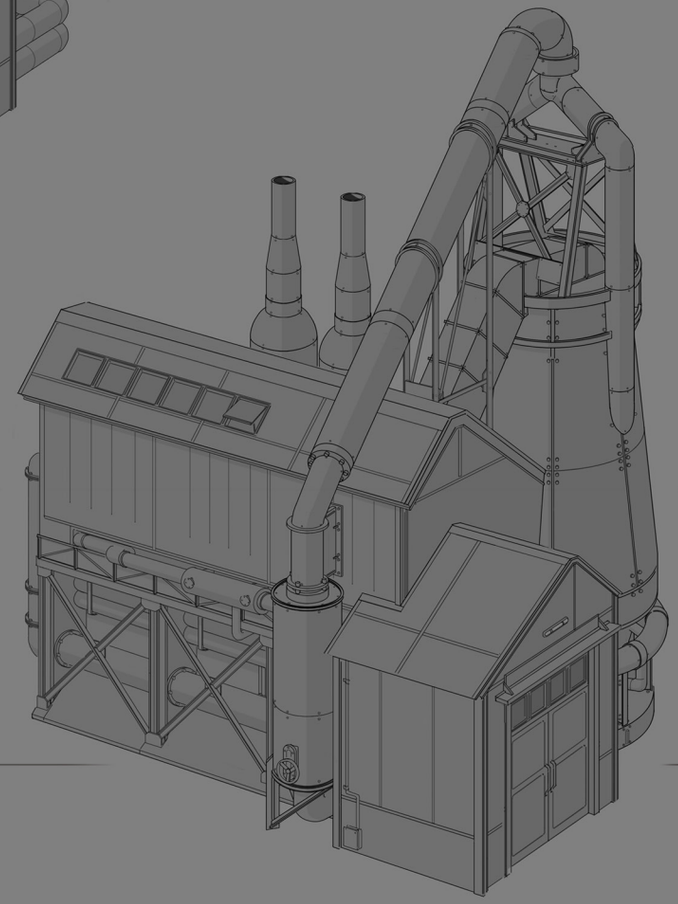

The designs for the facility modifications got pretty sophisticated. It was a lot of hours of technical illustration. The end result, however, has made for some very nice player creations in screenshots and videos.

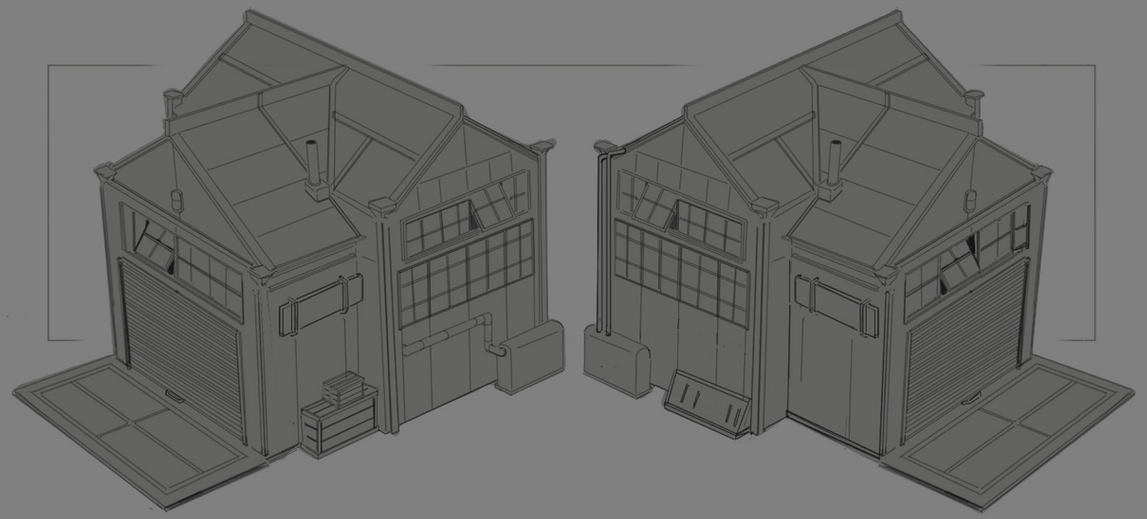

*Crate Transfer Station*

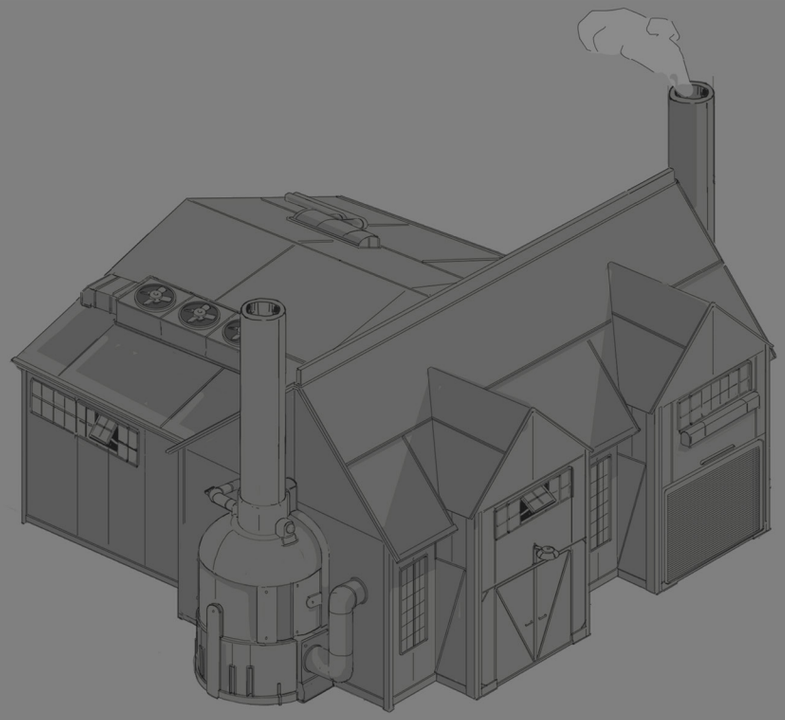

*Infantry Kit Factory*

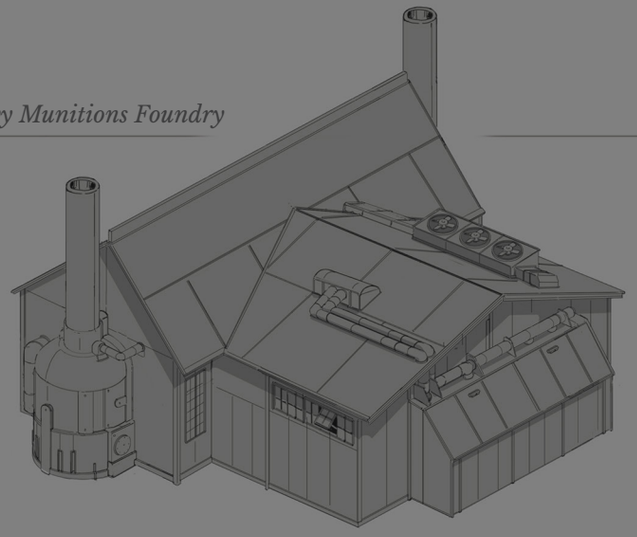

*Heavy Munitions Foundry*

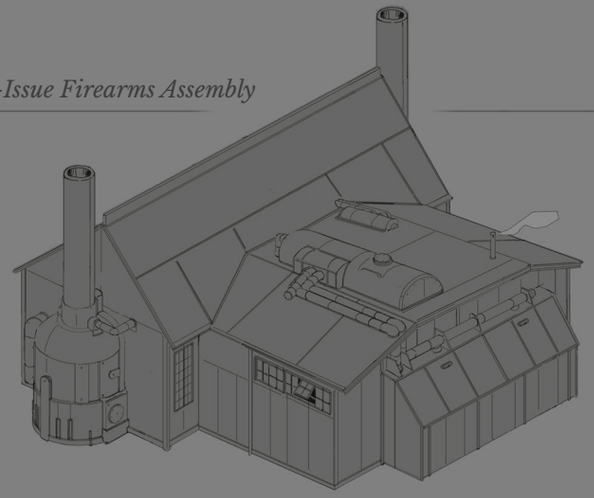

*Special-Issue Firearms Assembly*

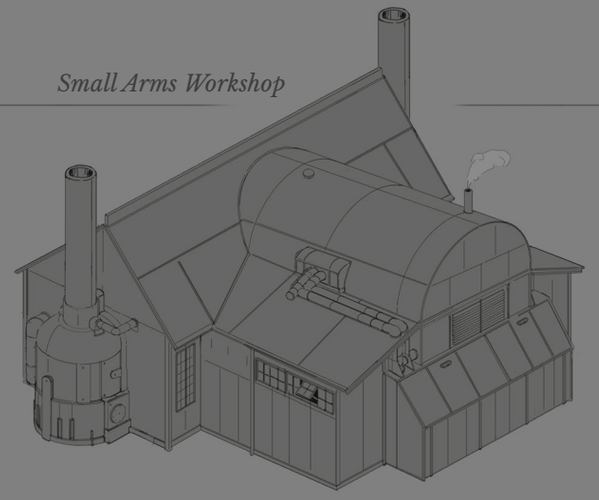

*Small Arms Workshop*

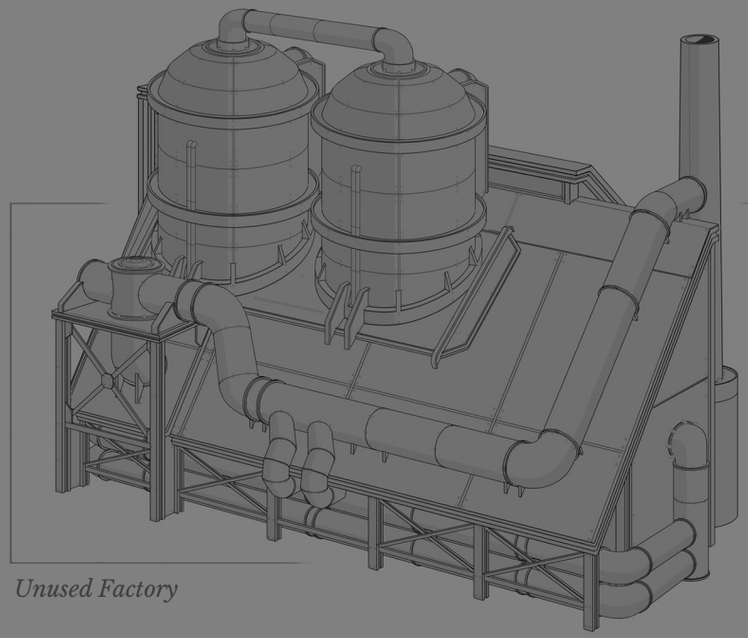

*Unused Factory*

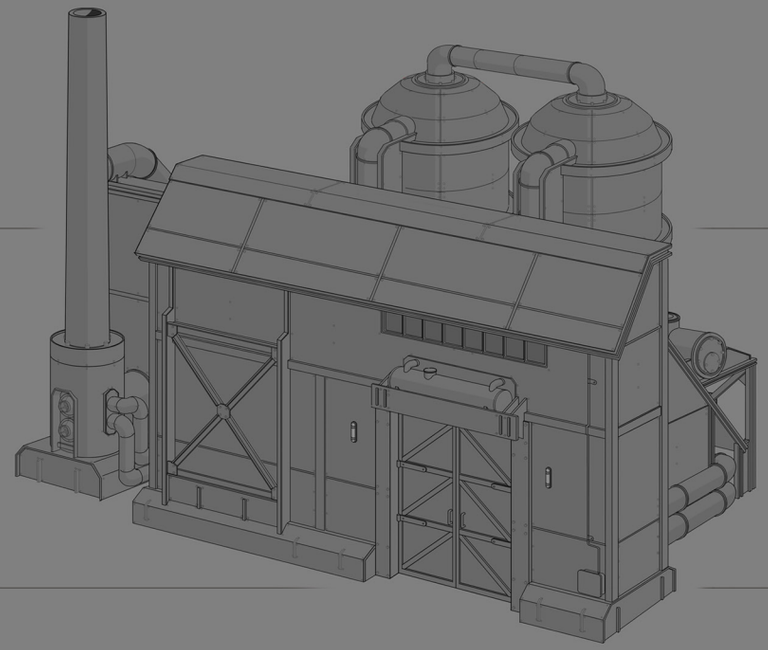

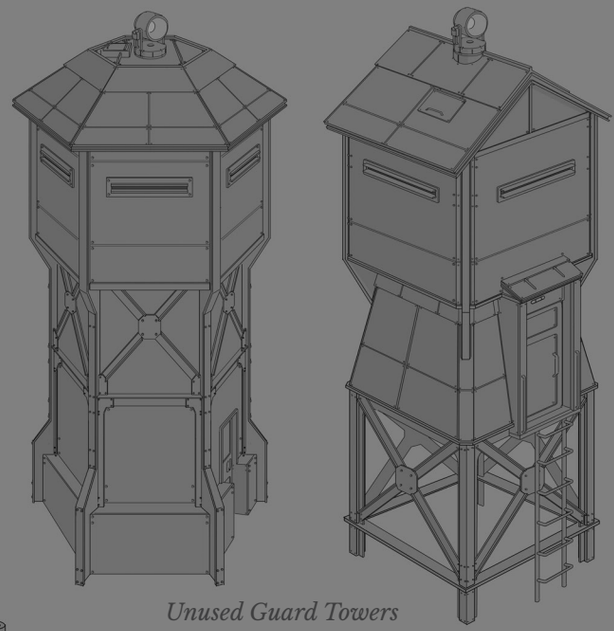

*Unused Guard Towers*

Like all other aspects of the visual design, unused concepts were created. There are a number of additional buildings, and at one point the idea of AI defence watch towers was considered but never adopted.

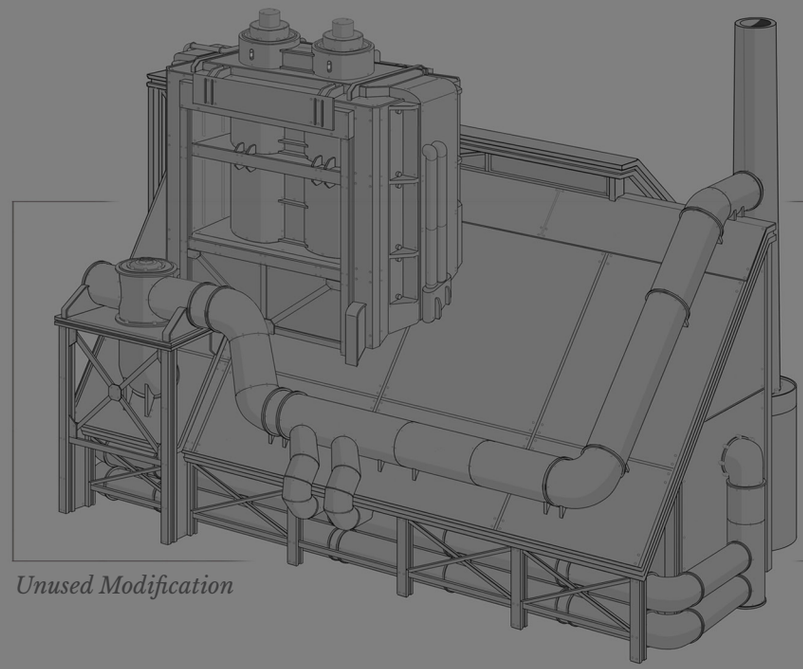

*Unused Modification*

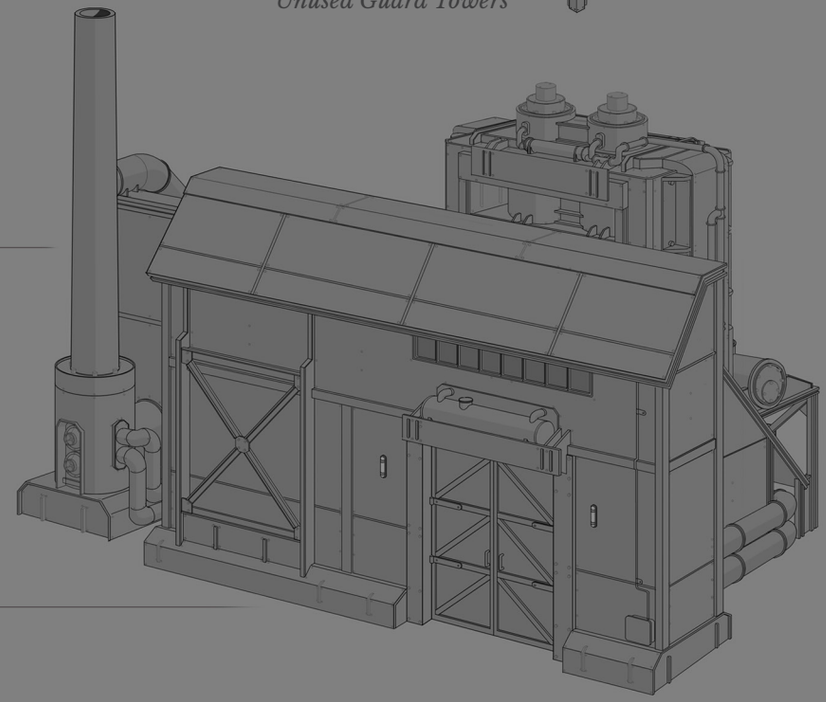

The visual development and game design for Facilities was a long one, but it created something very unique for Foxhole. It was a large addition that retained the vision of the game.

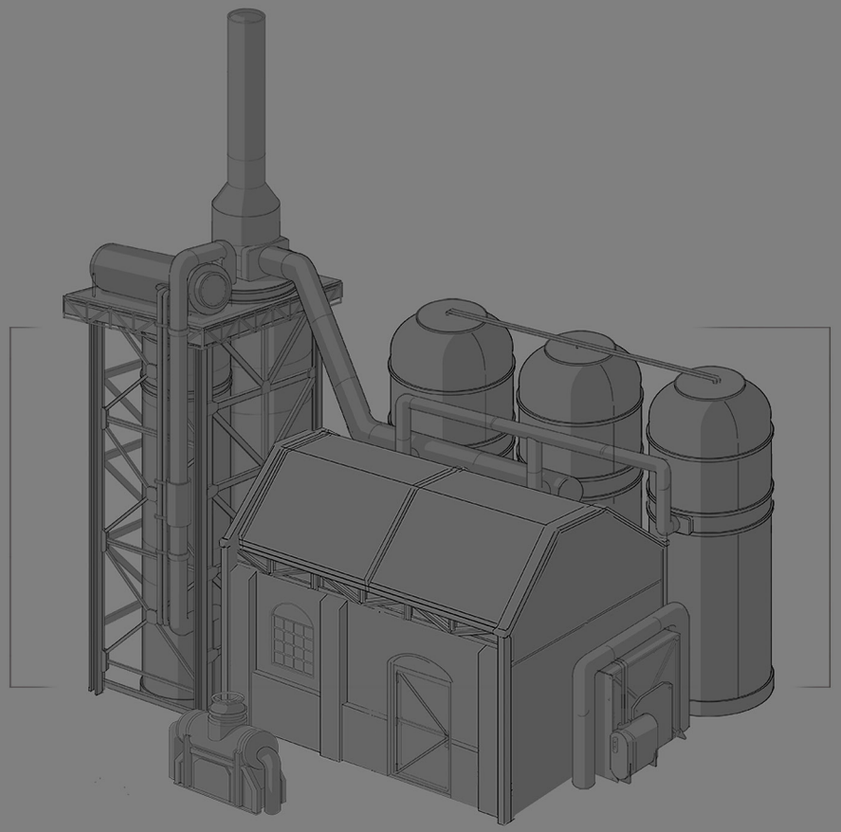

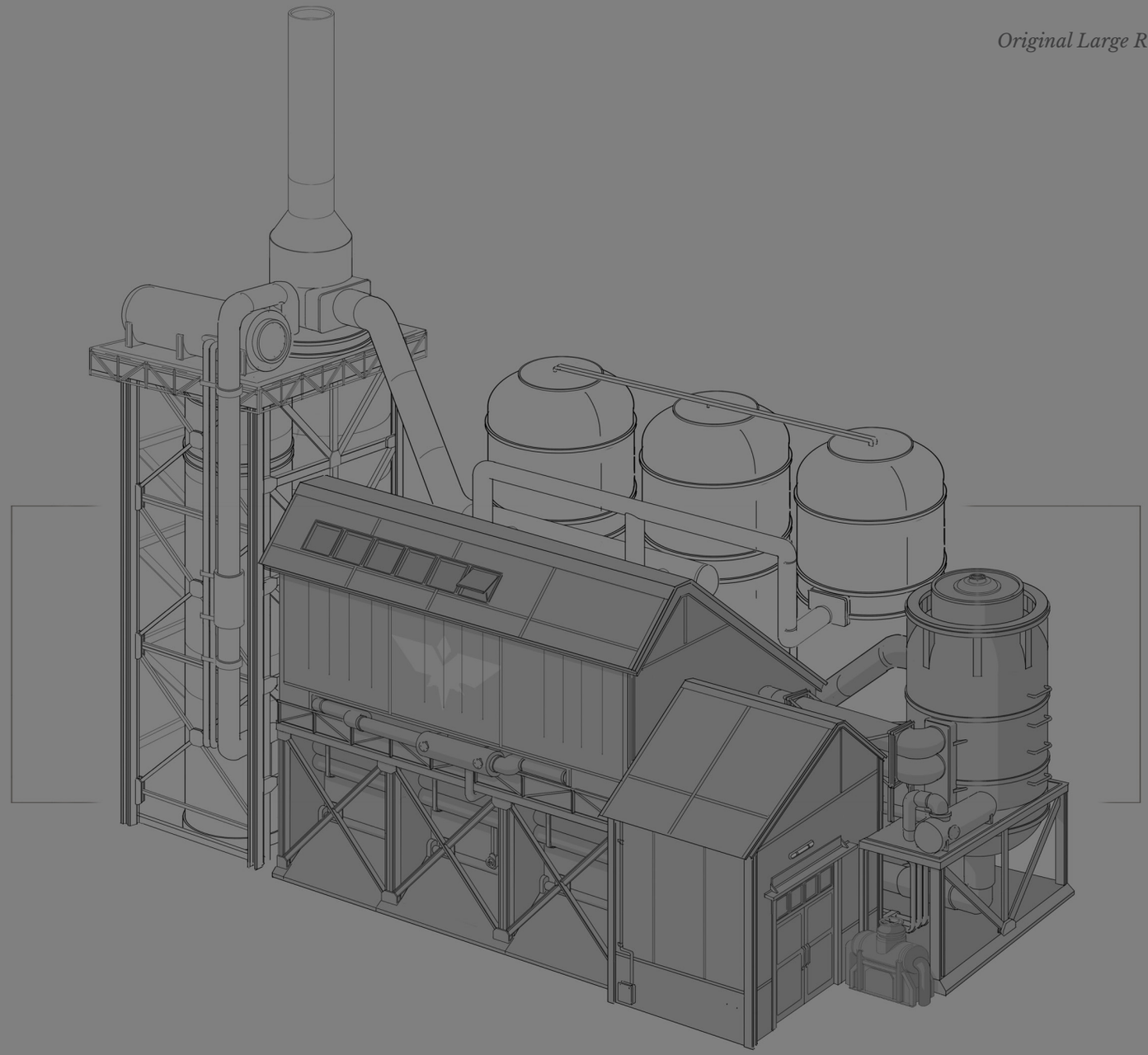

*Original Large Refinery*

*Unused Facillity Technology Center*

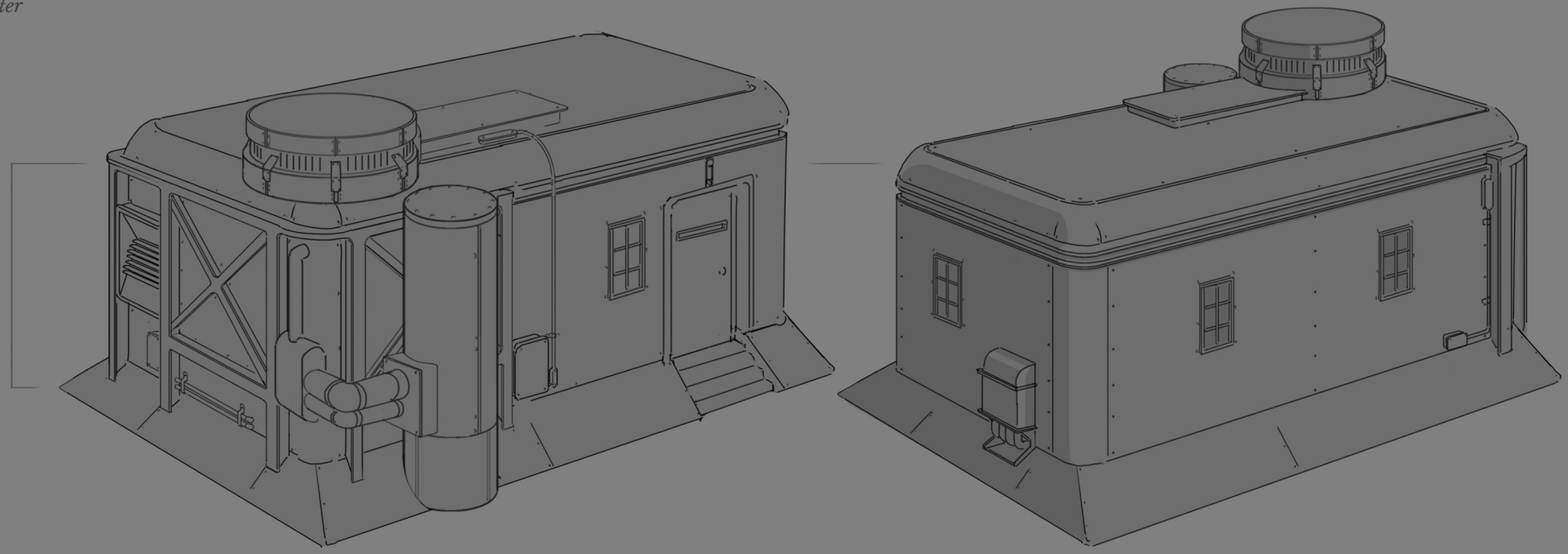

There was also a short lived idea to have player built Engineering Center. Concepts were adapted from the original building but the idea was not followed through with.

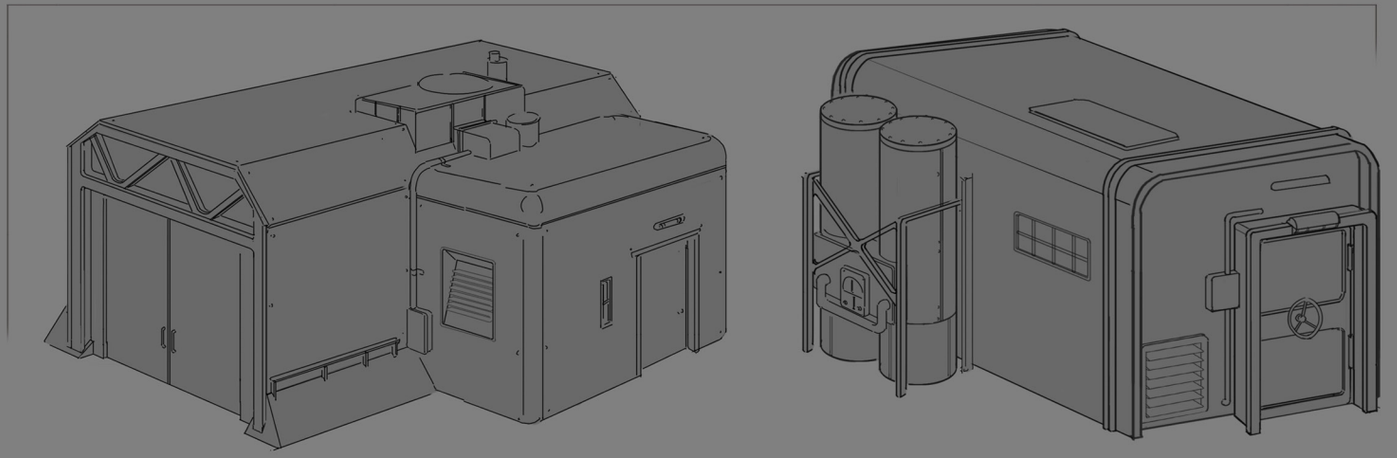

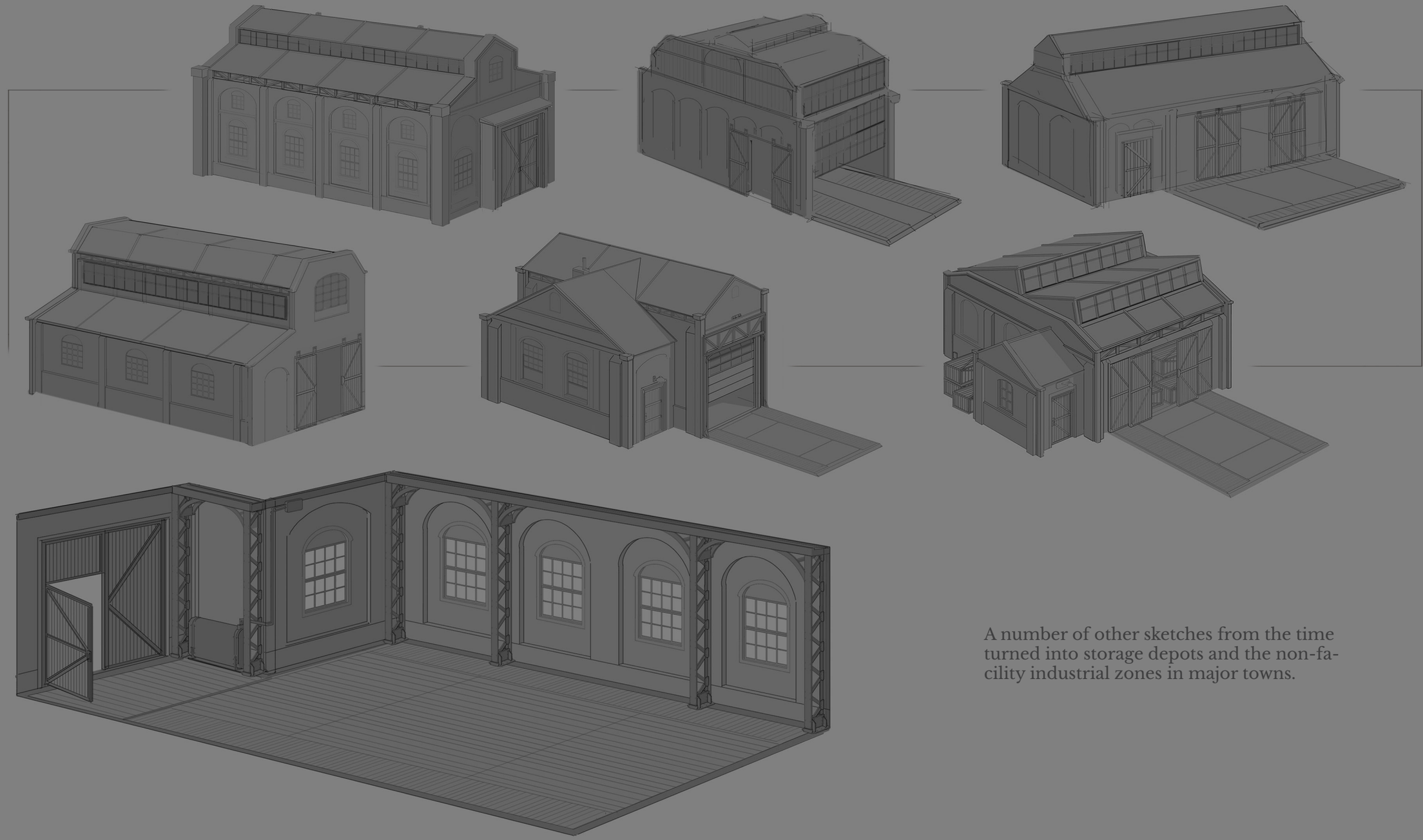

A number of other sketches from the time turned into storage depots and the non-facility industrial zones in major towns.

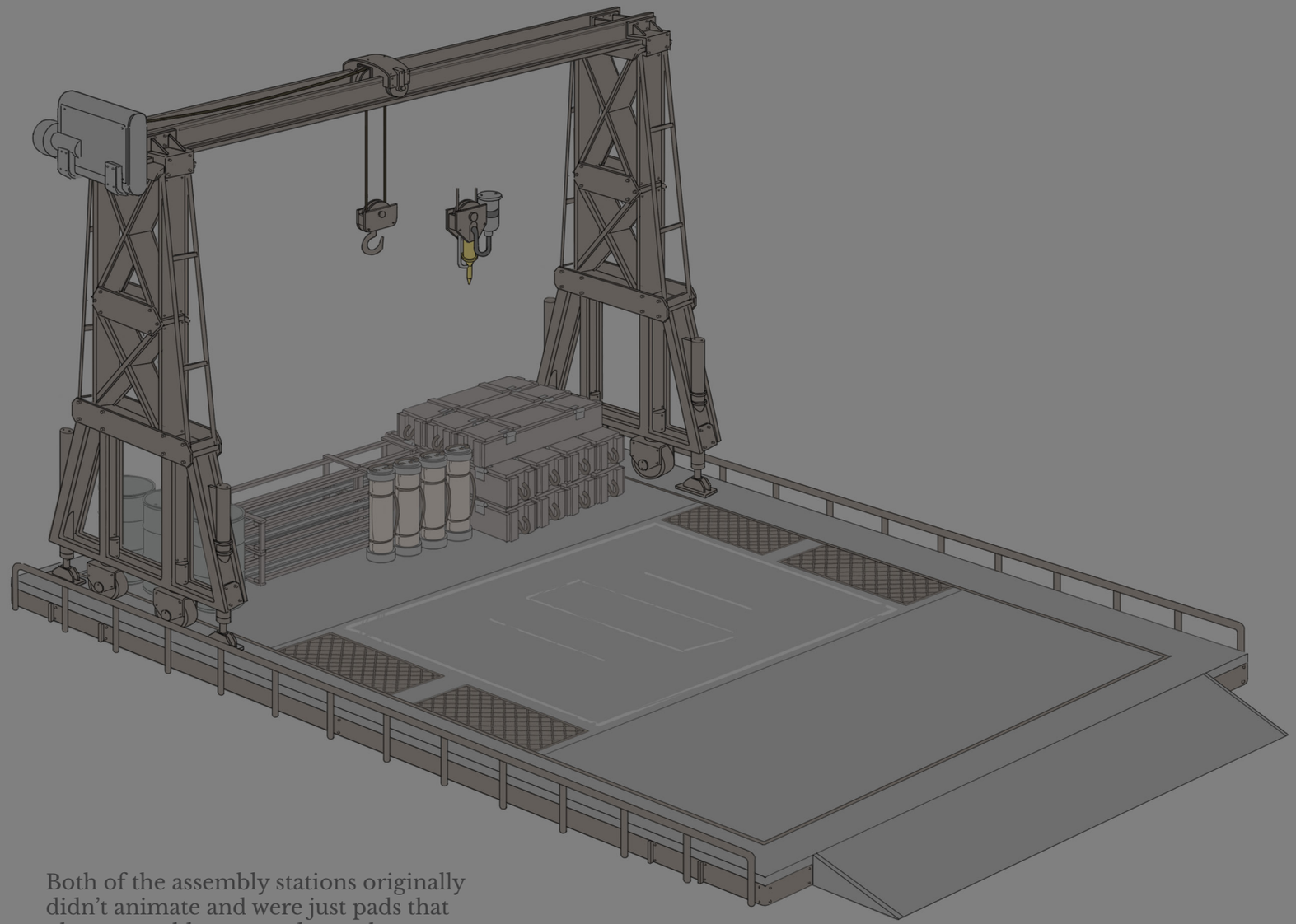

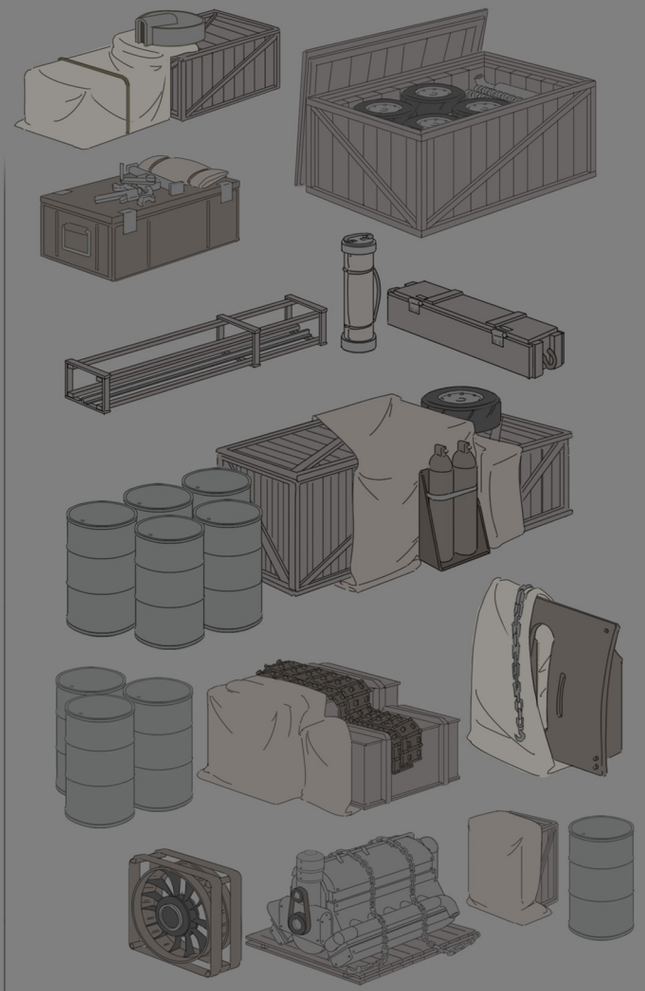

Both of the assembly stations originally didn't animate and were just pads that players would come and use a hammer to build vehicles on. This was later changed.

A large amount of extra parts were designed to represent the different assembly options.

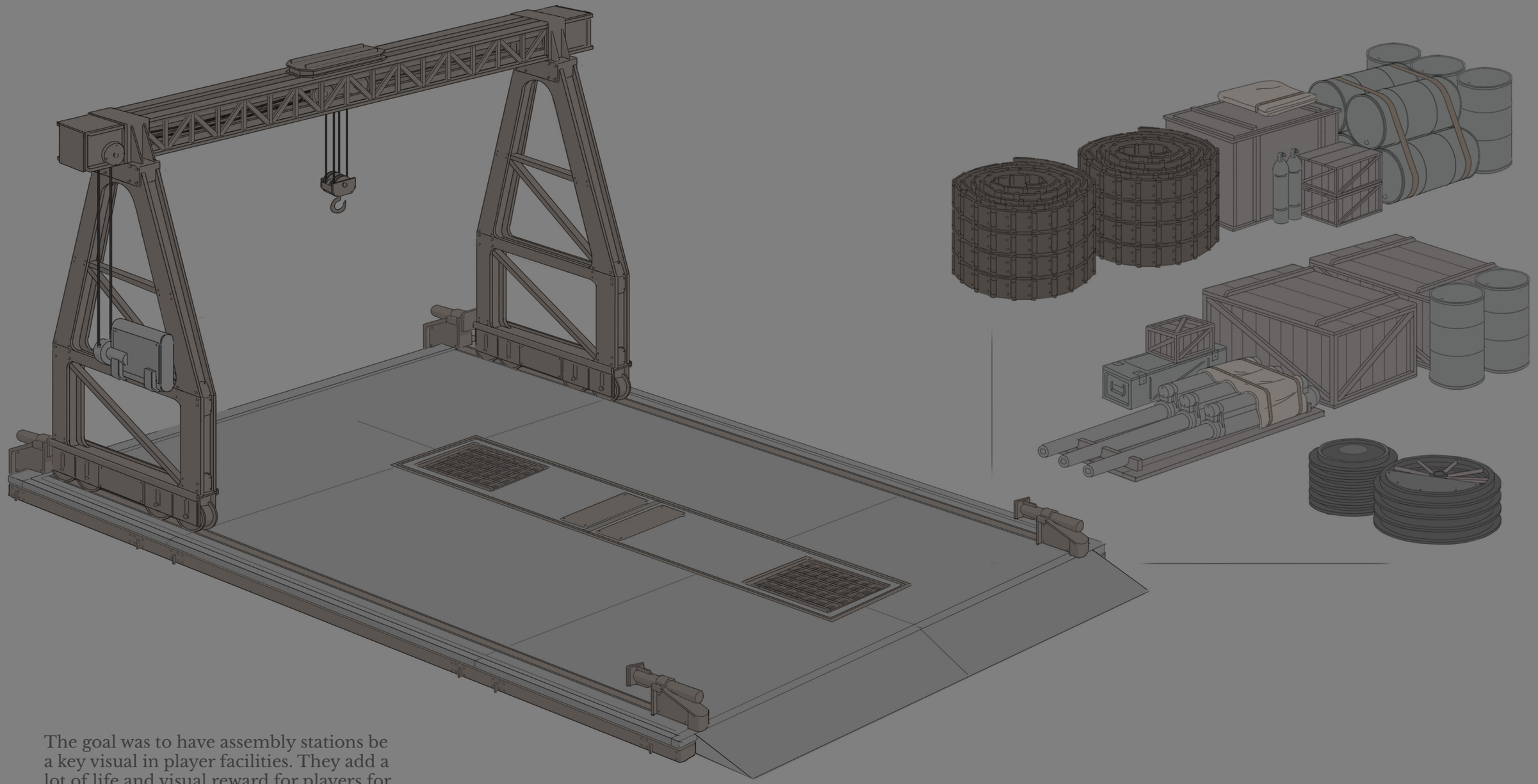

The goal was to have assembly stations be a key visual in player facilities. They add a lot of life and visual reward for players for whom facilities are their favoured aspect of Foxhole.

*Large Assembly Station*

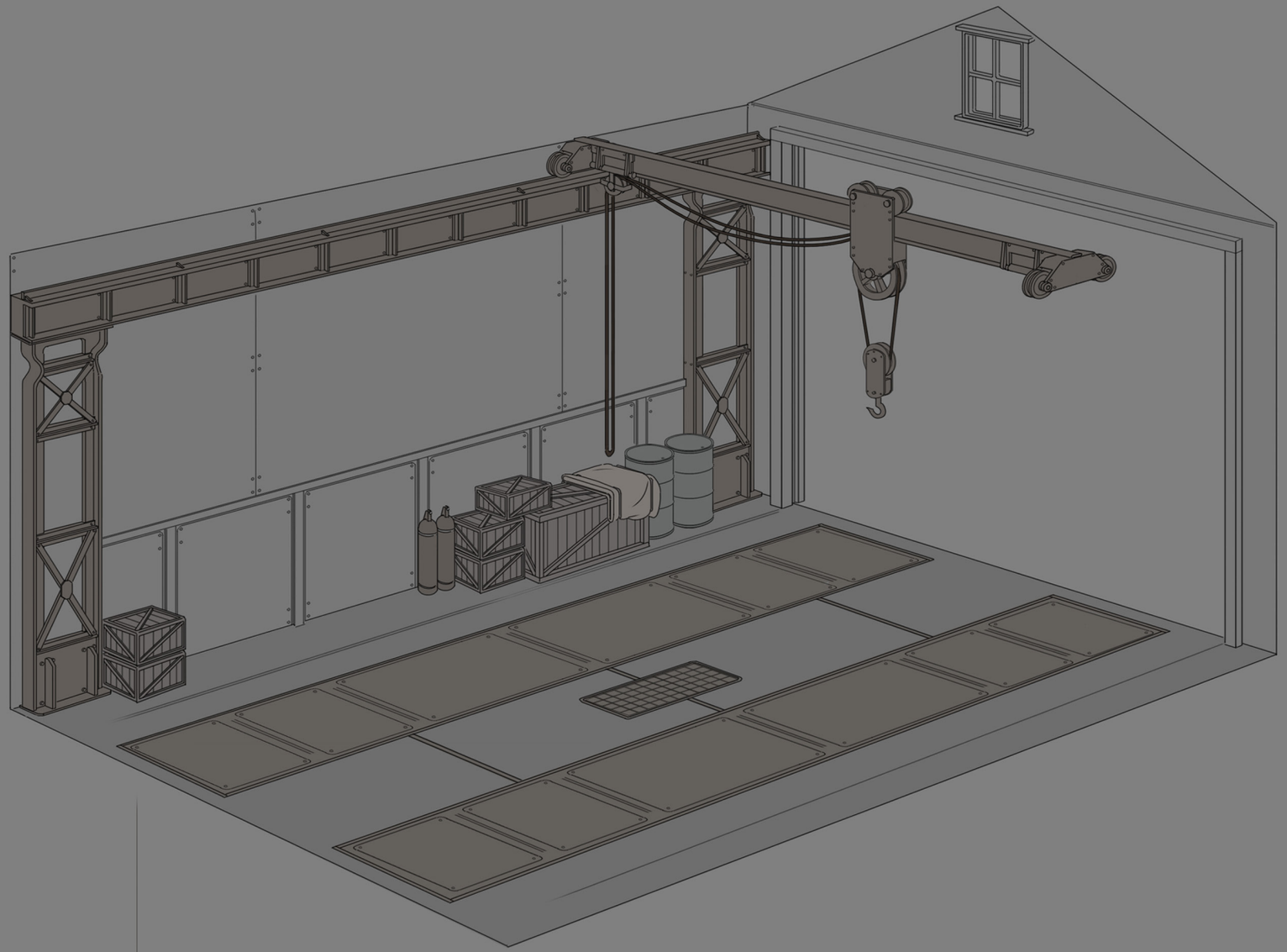

*Field Modification Center*

The Modification Centers are meant to look like a garage for adding paint or altering vehicles. They are in concept similar to the assembly stations, but a roof was added to indicate that they have a different role.

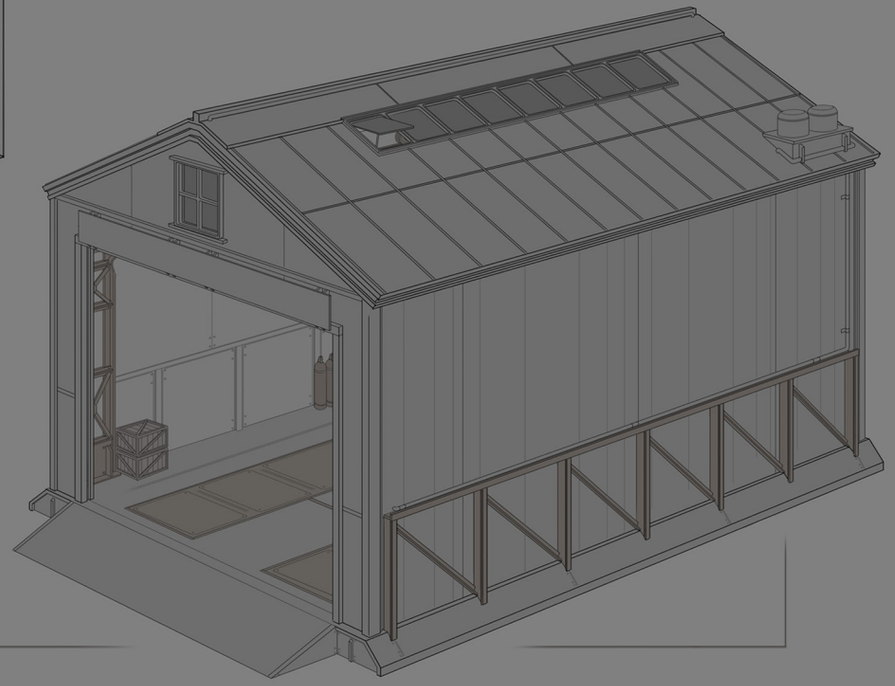

*BMS - Overseer Sky-Hauler*

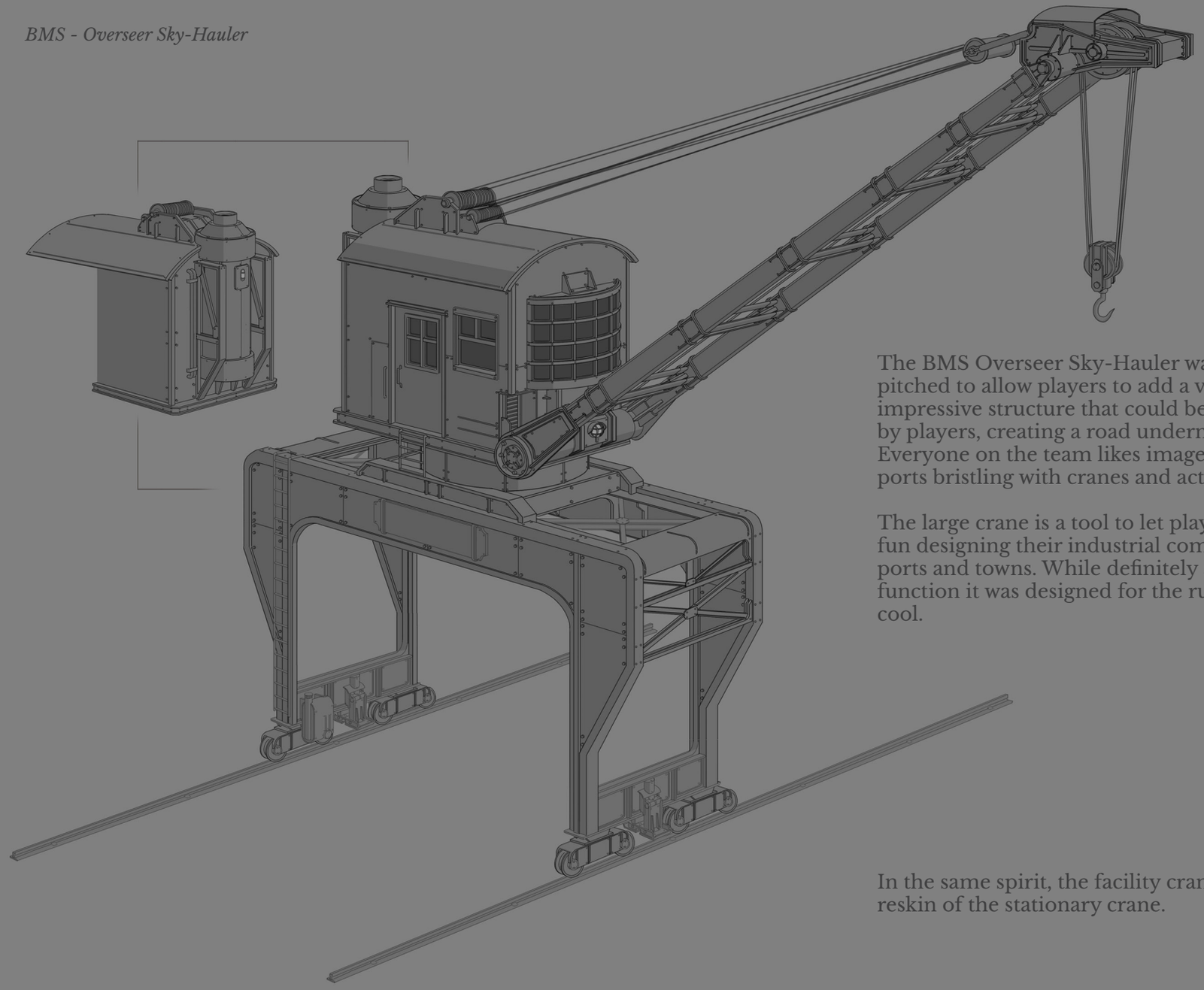

The BMS Overseer Sky-Hauler was pitched to allow players to add a visually impressive structure that could be driven by players, creating a road underneath. Everyone on the team likes images of old ports bristling with cranes and activity.

The large crane is a tool to let players have fun designing their industrial complex, ports and towns. While definitely adding function it was designed for the rule of cool.

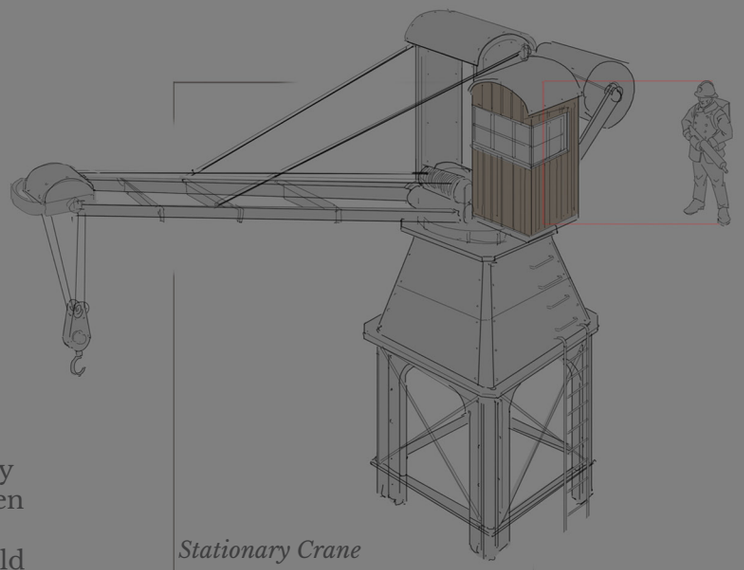

*Stationary Crane*

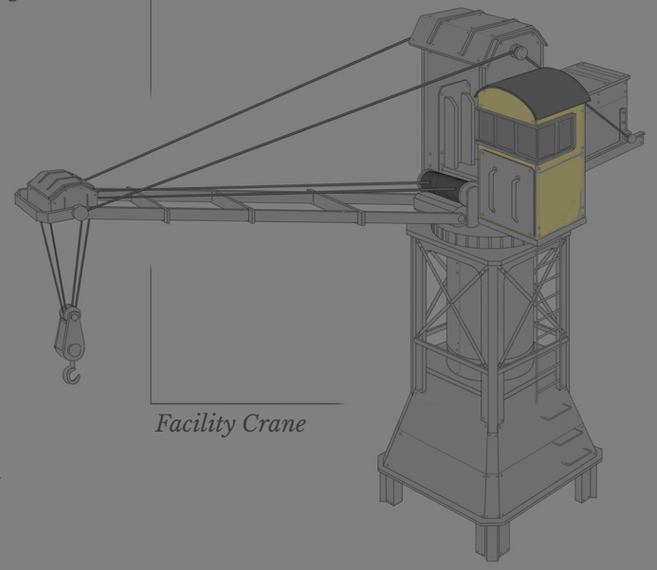

*Facility Crane*

In the same spirit, the facility crane was a reskin of the stationary crane.

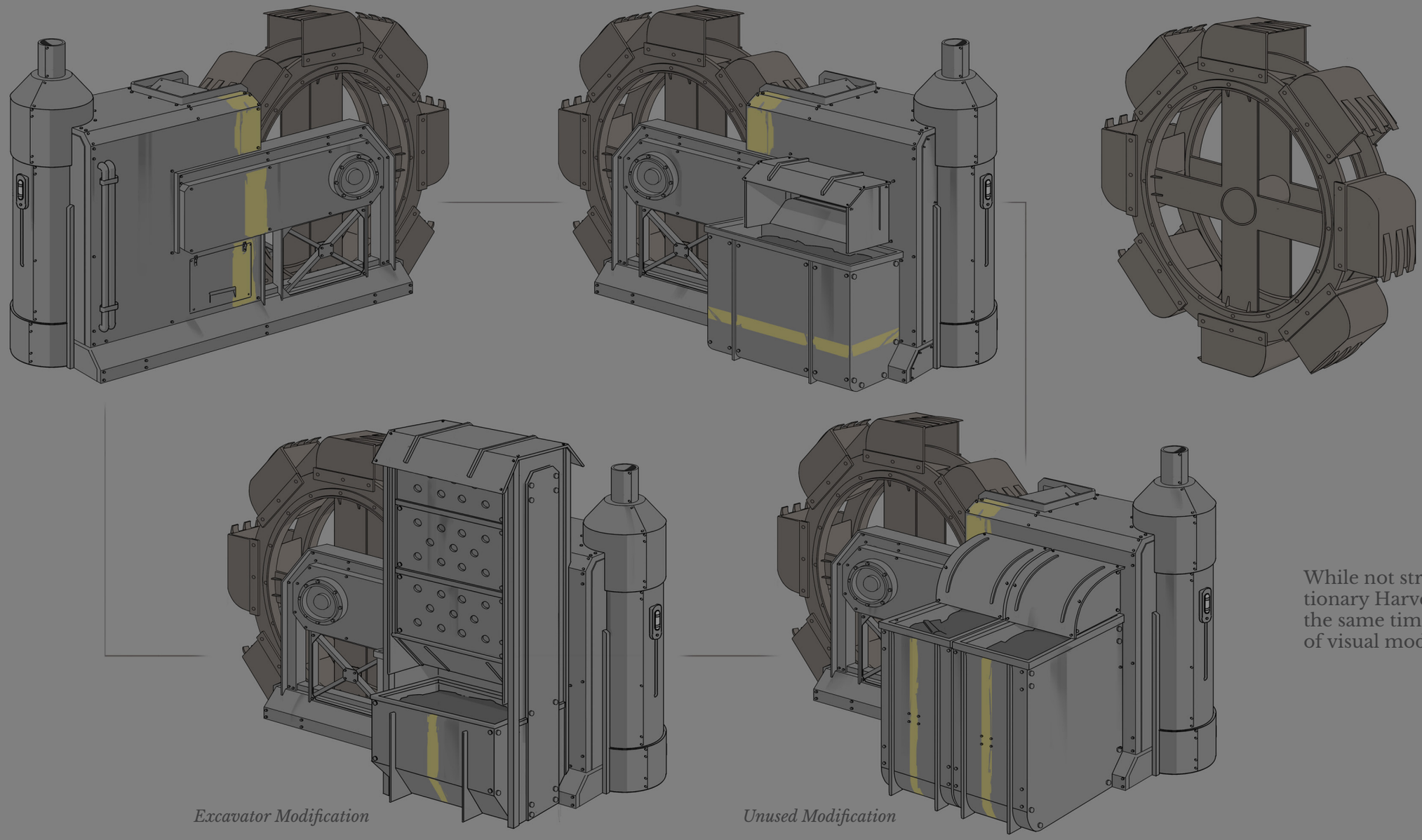

*Excavator Modification*

*Unused Modification*

While not strictly a Facility, the Stationary Harvester was designed at the same time with the same logic of visual modifications.

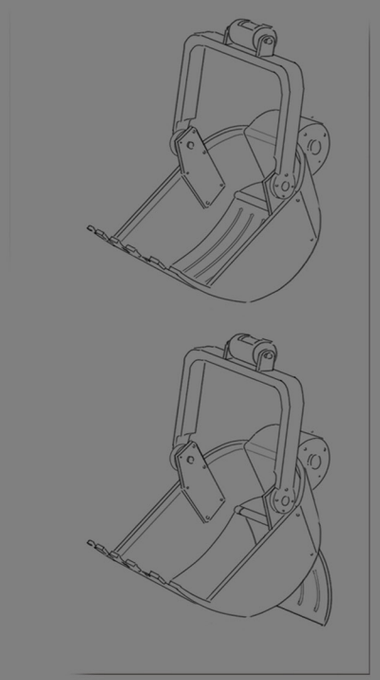

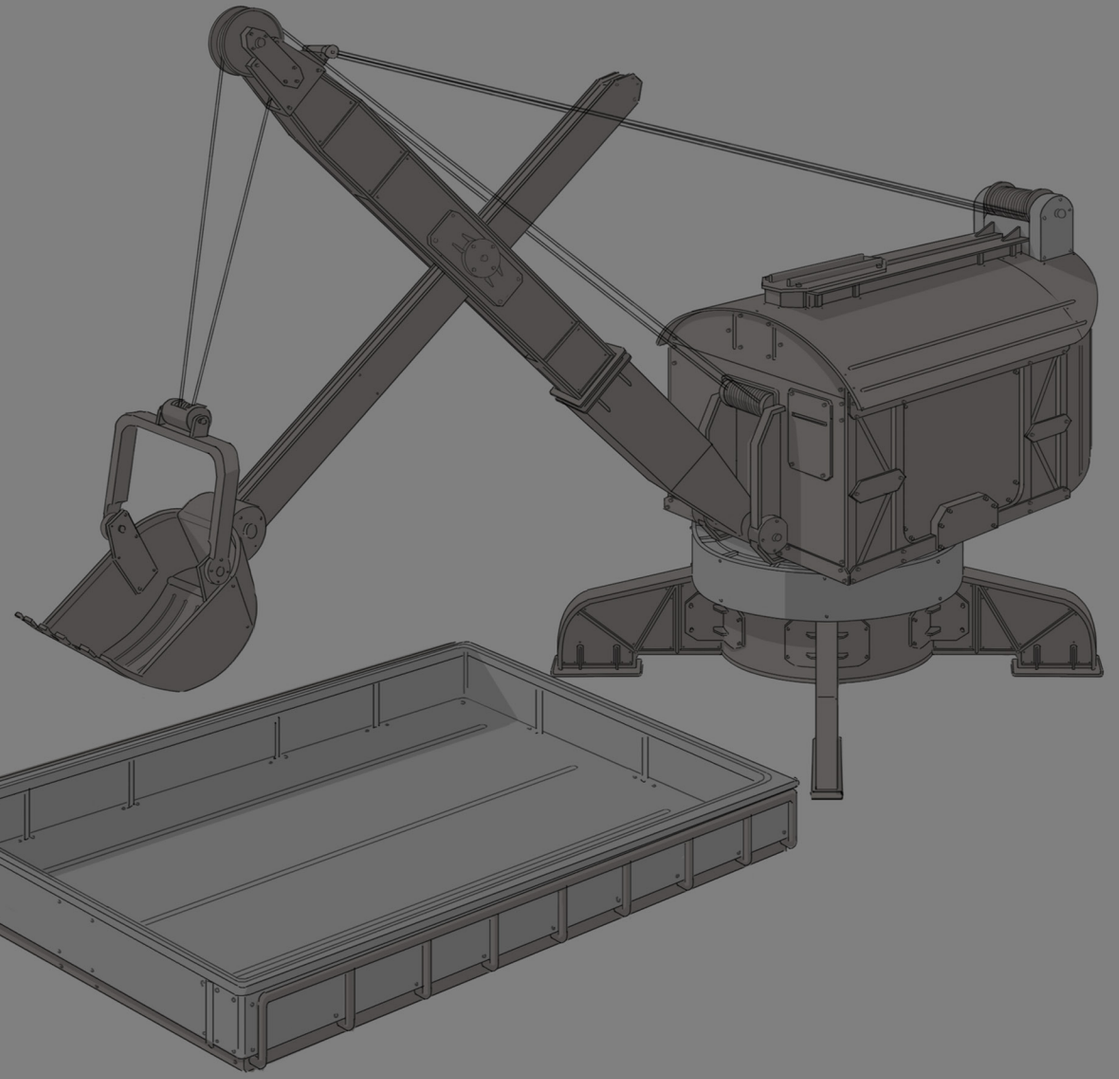

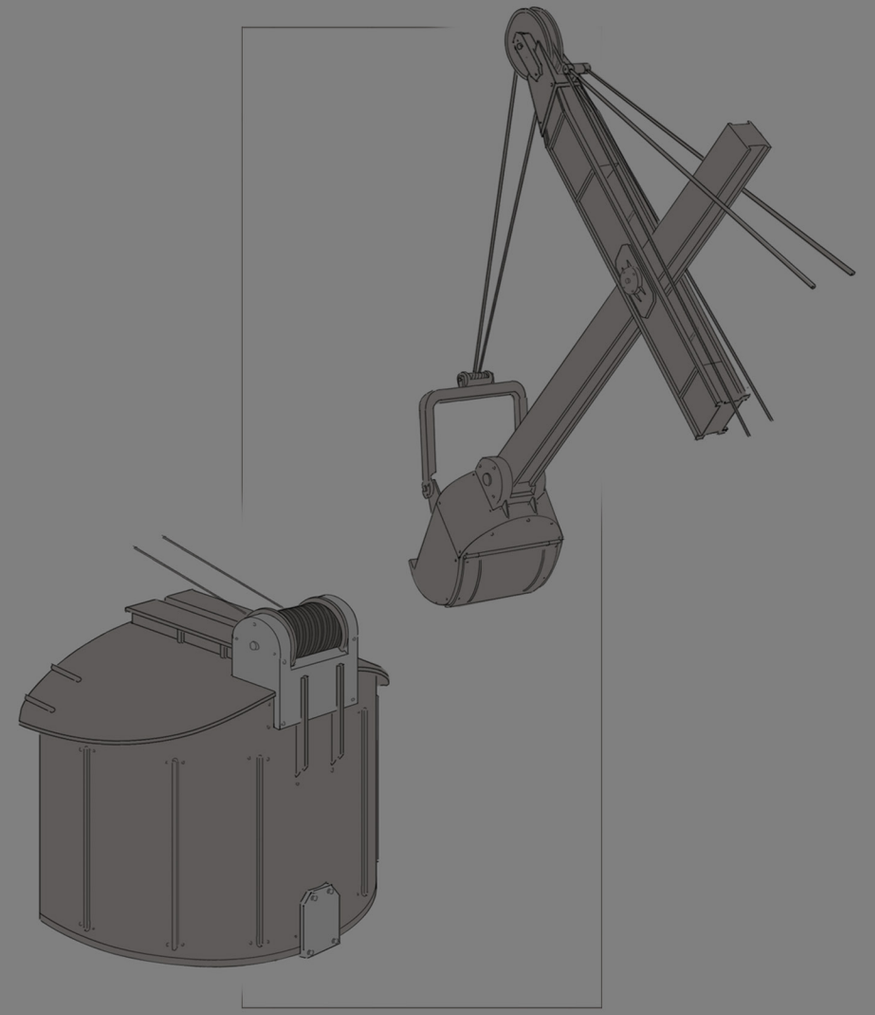

The Construction Equipment started out larger in the concept, but was scaled down more than once. The gameplay requirement was an automated building unit. Obviously, no analog to that existed in the 1930's so we had to accept that it would feel a little odd, and adapt the final model to look right in game.

*BMS - Fabricator*

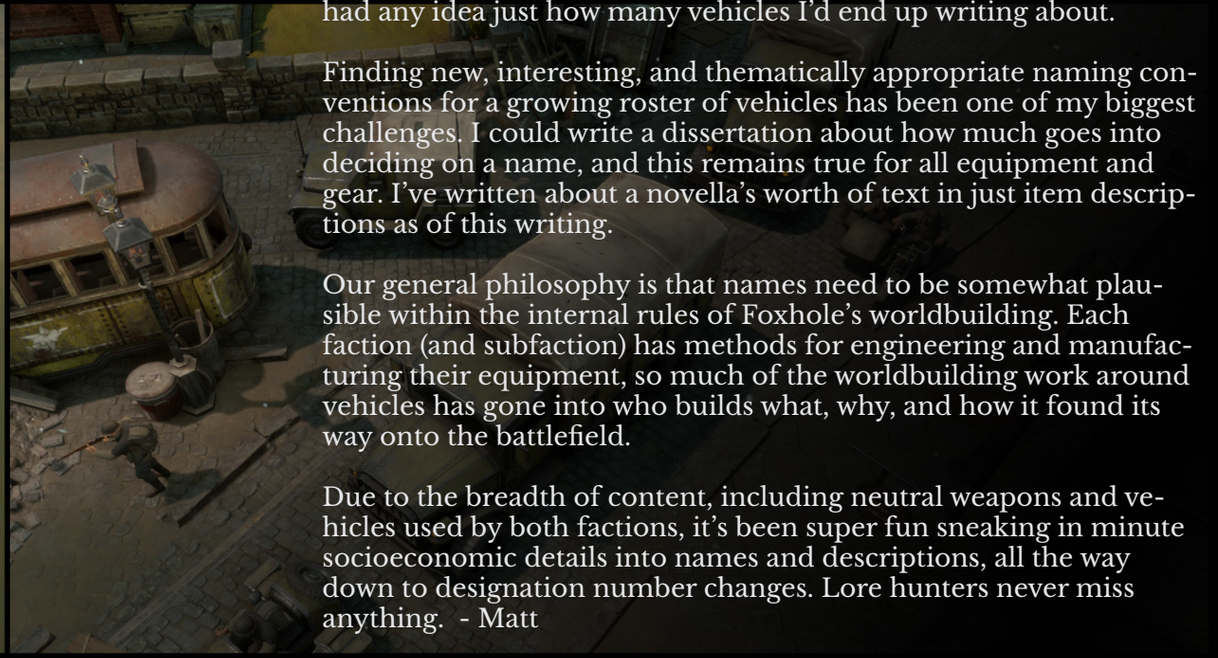

# Vehicle Naming

The vehicles of Foxhole are varied, with most being faction-specific. When launching the very first trucks and half-tracks, I don't think I had any idea just how many vehicles I'd end up writing about.

Finding new, interesting, and thematically appropriate naming conventions for a growing roster of vehicles has been one of my biggest challenges. I could write a dissertation about how much goes into deciding on a name, and this remains true for all equipment and gear. I've written about a novella's worth of text in just item descriptions as of this writing.

Our general philosophy is that names need to be somewhat plausible within the internal rules of Foxhole's worldbuilding. Each faction (and subfaction) has methods for engineering and manufacturing their equipment, so much of the worldbuilding work around vehicles has gone into who builds what, why, and how it found its way onto the battlefield.

Due to the breadth of content, including neutral weapons and vehicles used by both factions, it's been super fun sneaking in minute socioeconomic details into names and descriptions, all the way down to designation number changes. Lore hunters never miss anything.  - Matt

*Dunne Transport*

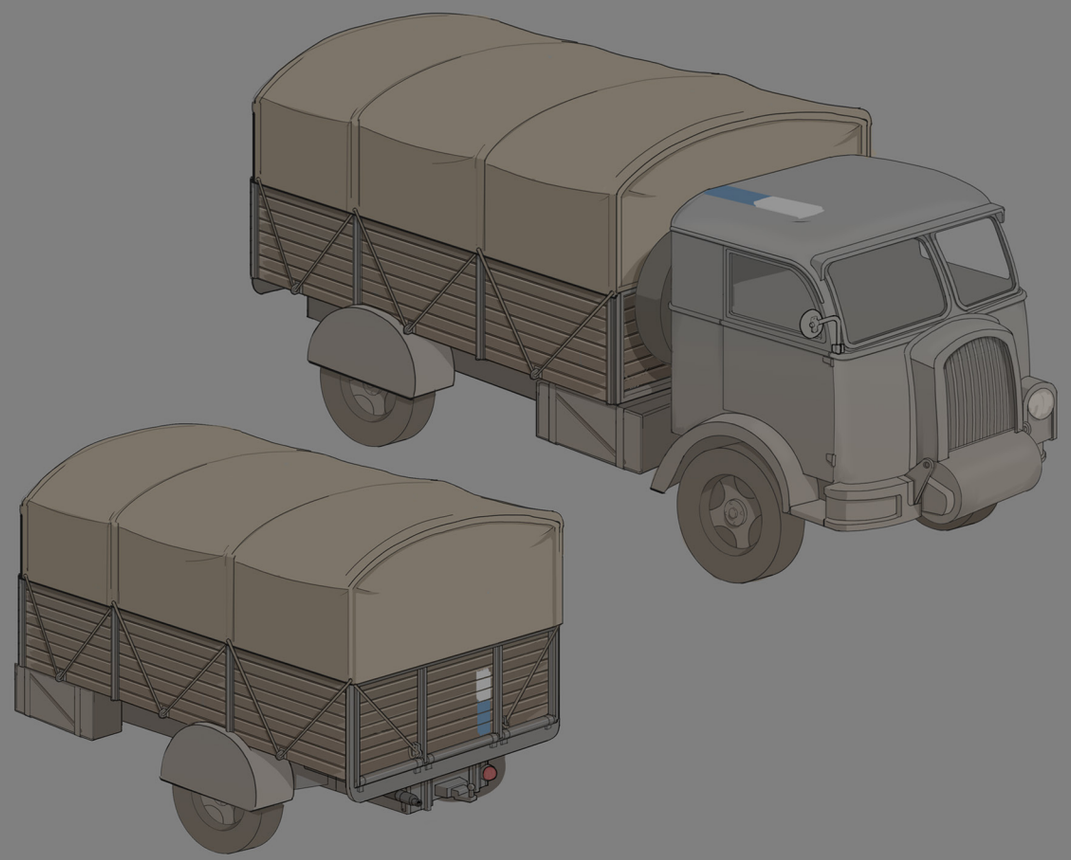

*Leatherback*

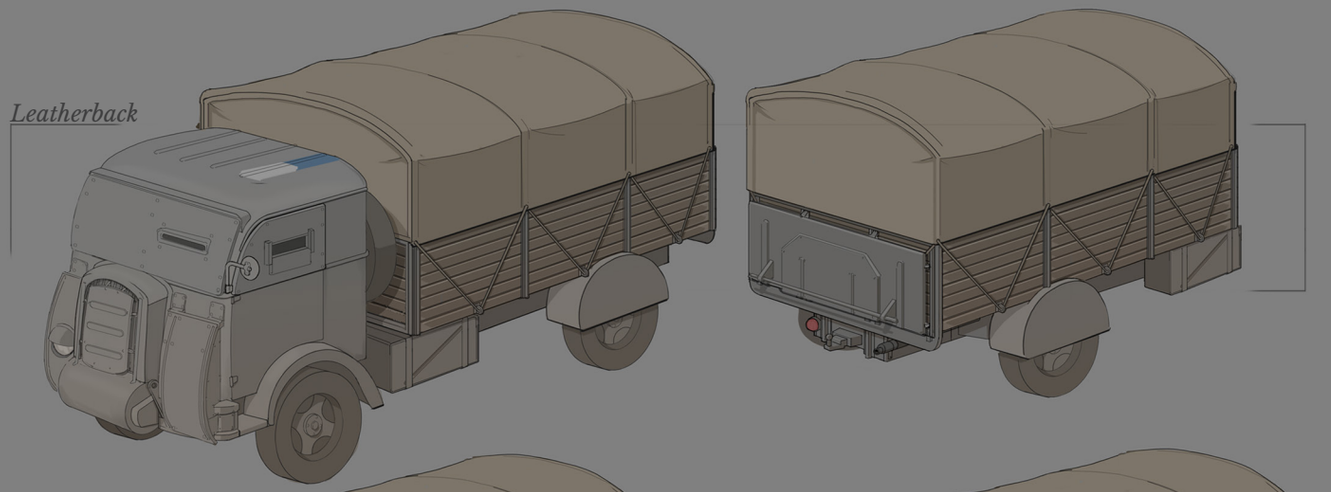

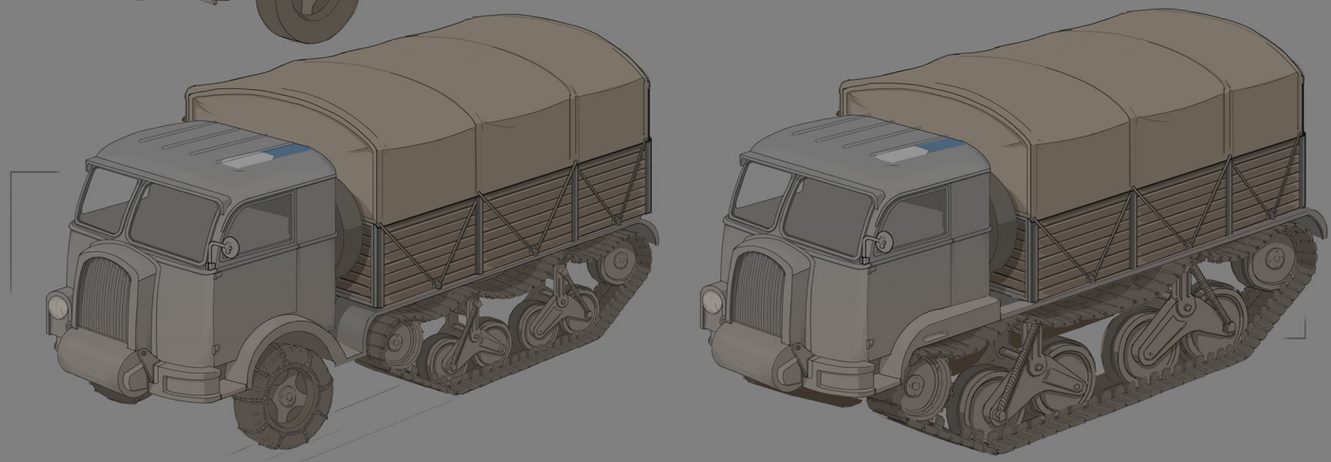

*Landrunner*

## TRUCKS

Possibly the most visible and important vehicles in the game, the trucks played a large role in defining the visual language of the factions. The warden Dunne Transport and its variants were meant to give off a more civilian vehicle look than the Colonial R-1 Hauler. The R-1 Hauler was designed by altering the first temporary truck in the game, which came from Fortified. A concept was not drawn at the time and its variants were drawn on top of the 3D model.

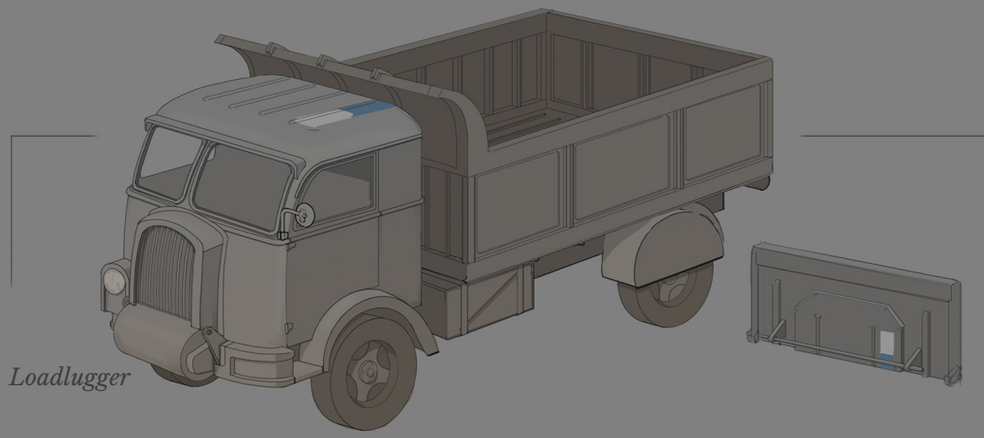

*Loadlugger*

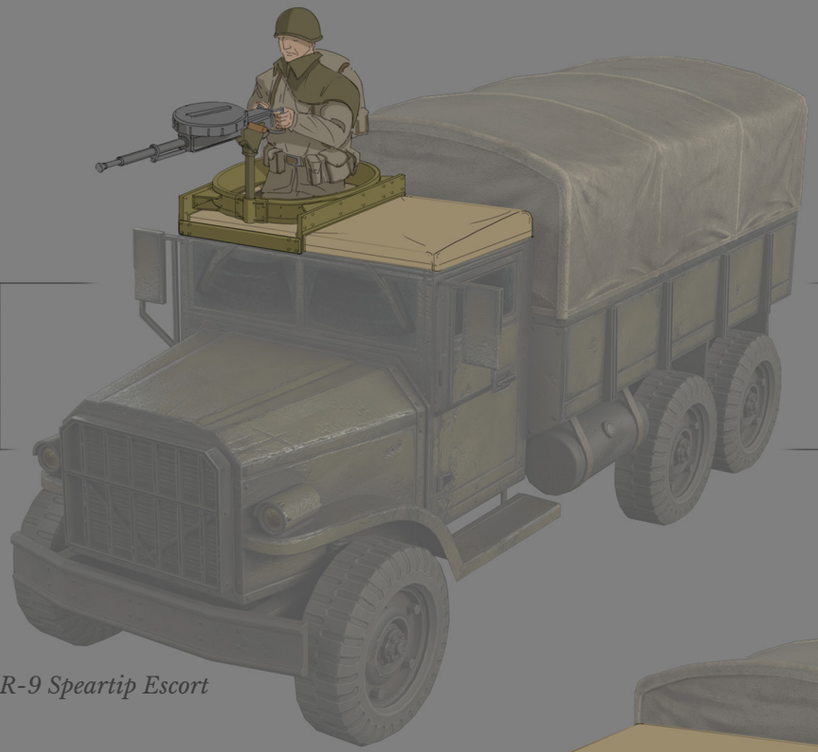

*R-9 Speartip Escort*

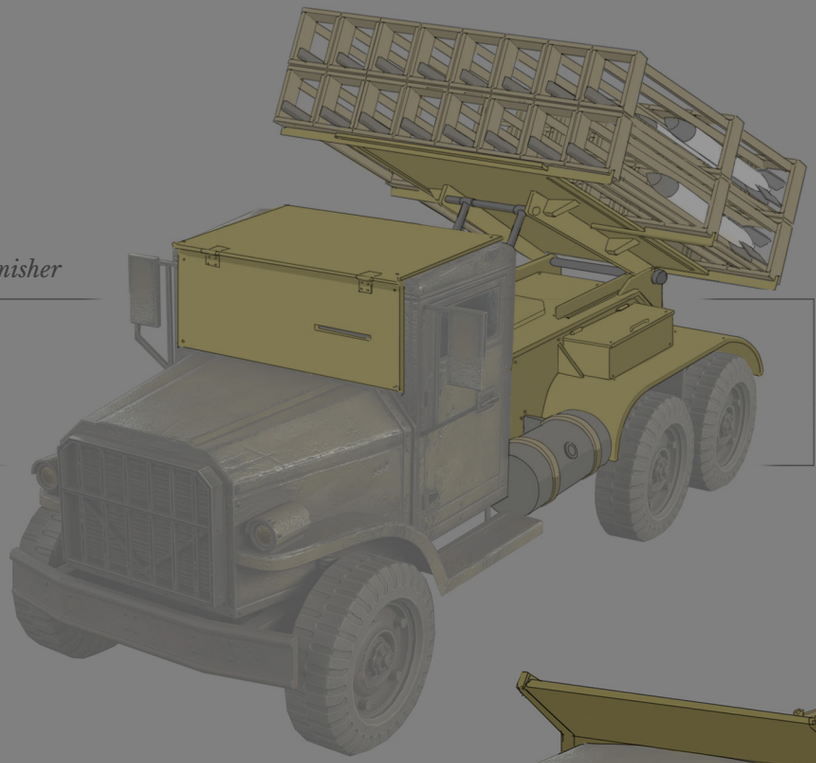

*R-17 Retiarius Skirmisher*

The trucks were a learning tool for us, a test bed for what vehicle variants could be. The visuals and the tech to implement vehicle variants were developed in tandem.

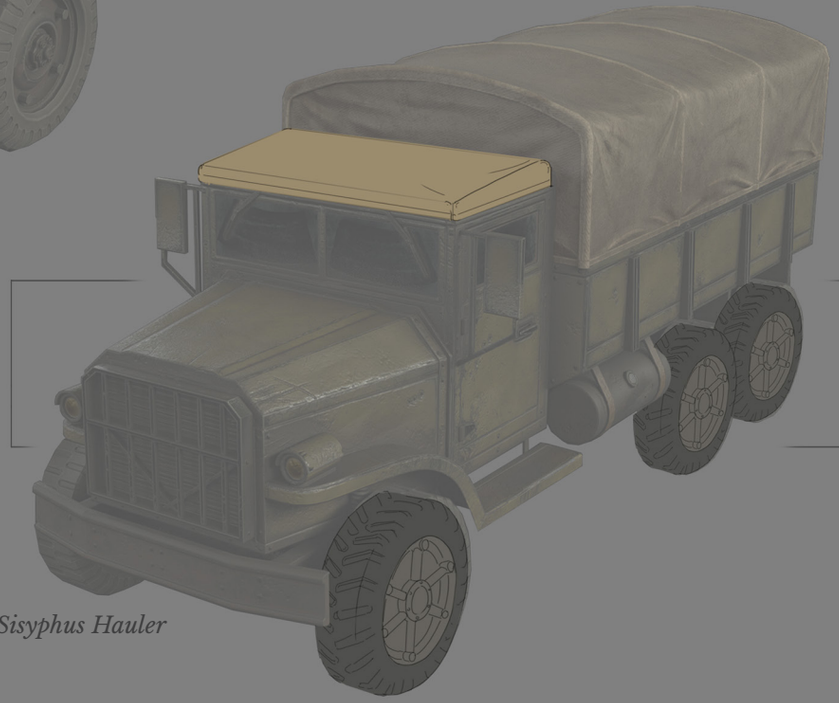

*R-5B Sisyphus Hauler*

*R-5 Atlas Hauler*

*Cnute Cliffwrest*

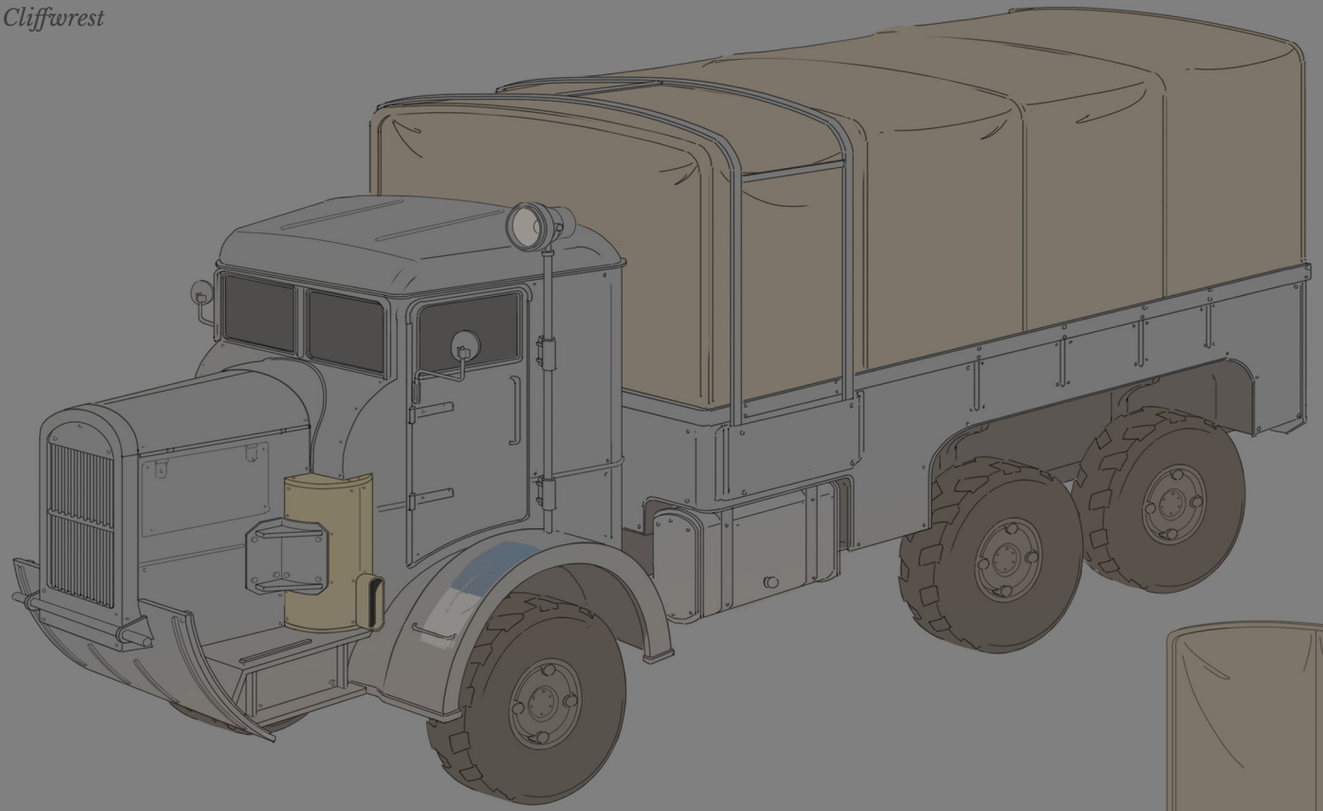

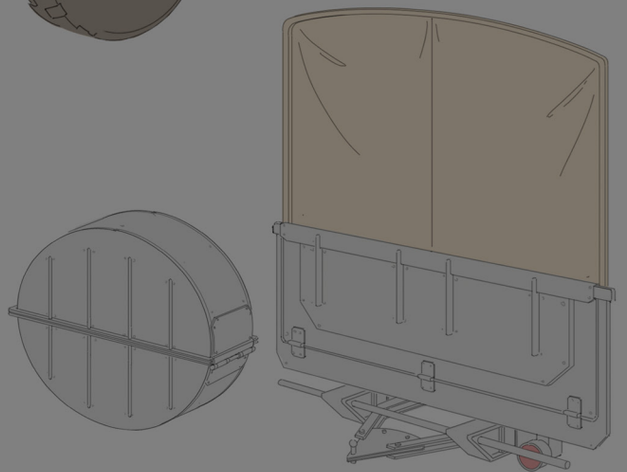

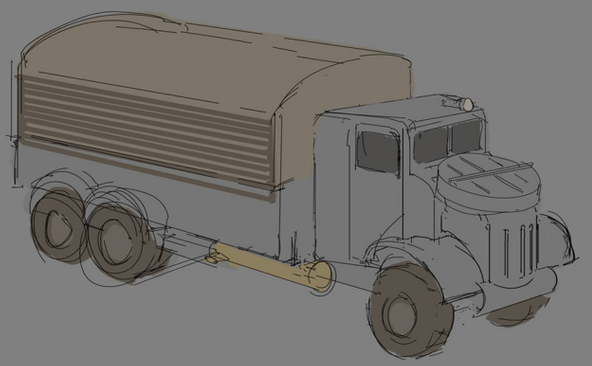

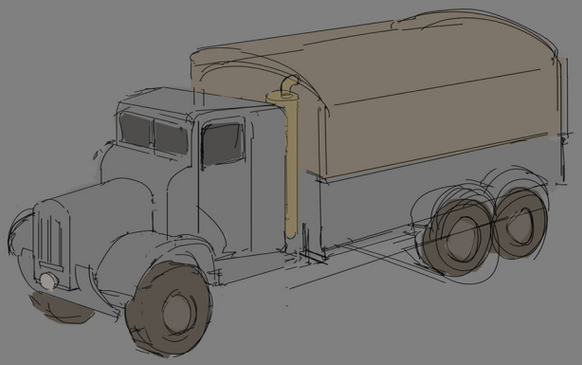

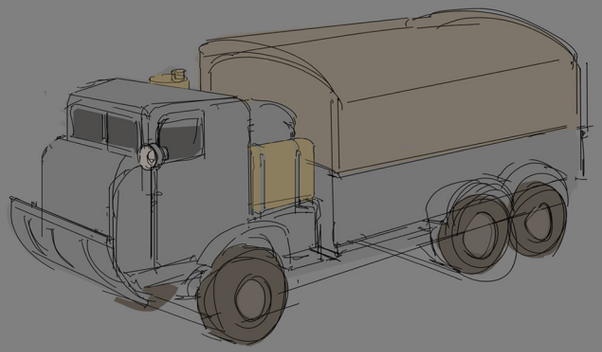

## HEAVY-DUTY TRUCKS

The Heavy Duty Trucks came much later in production, long after the look of the factions was established. Their role was to give the logi players more options to play as a war went on and to have a vehicle that was specialized for towing. The combat vehicles roster was expansive, and we wanted to see more variety in the back lines. Towing trailers were also being worked on at this time and the idea of a gear shift was explored to give the heavy duty trucks their own personality.

*AU-A 150 Taurine Rigger*

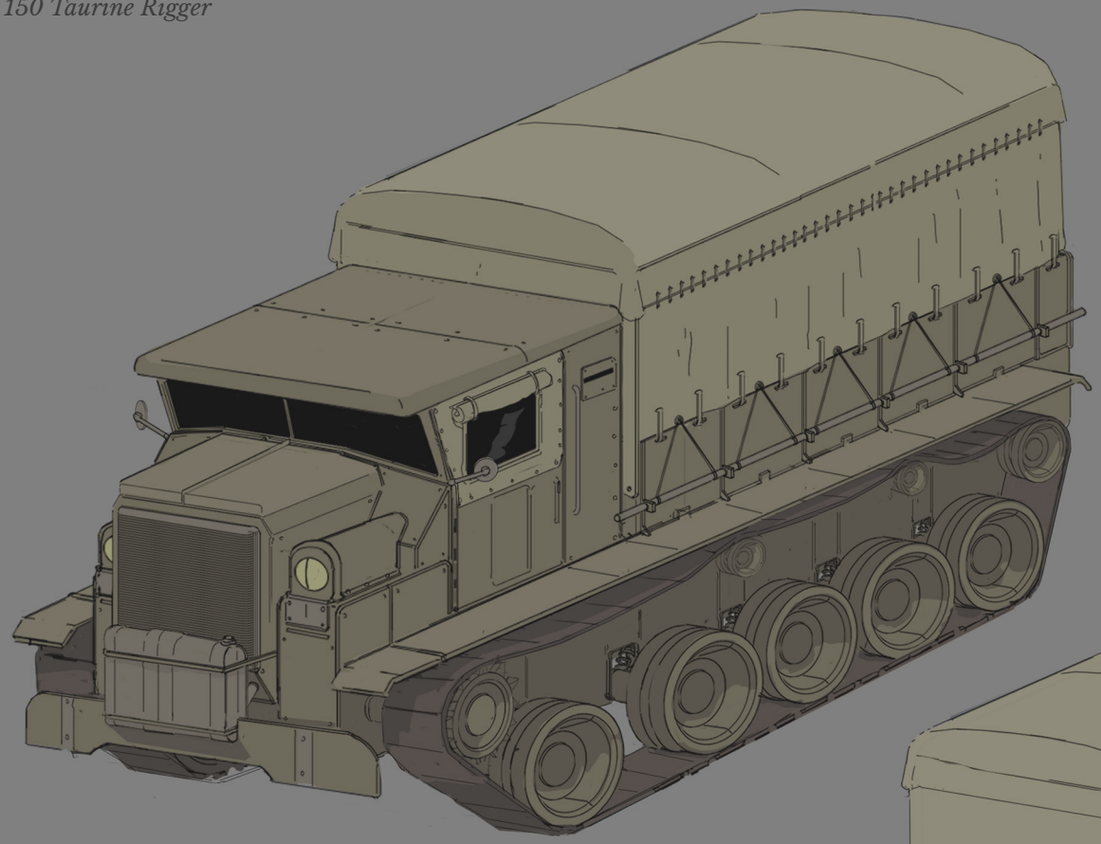

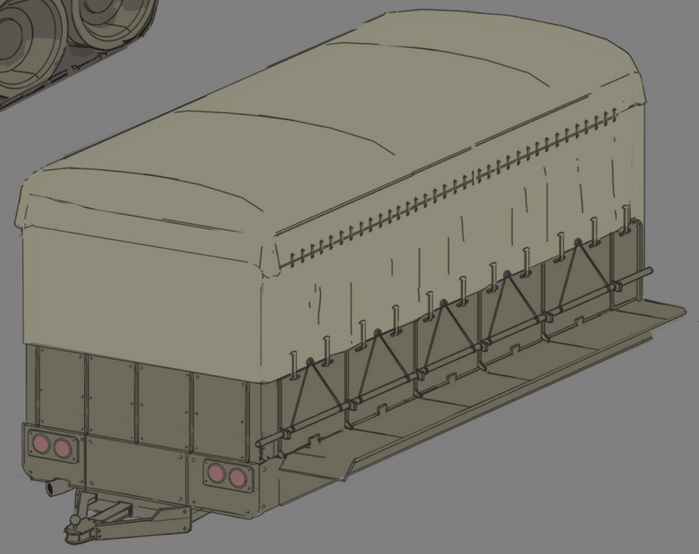

The idea for the gear shift gameplay came after we saw the models in engine. The addition of a gameplay feature is always welcome because of how it expands the possibilities for future concepts.

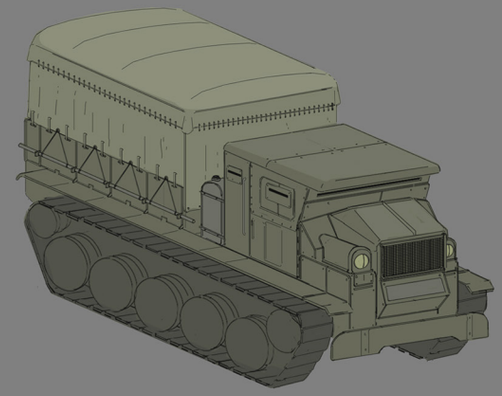

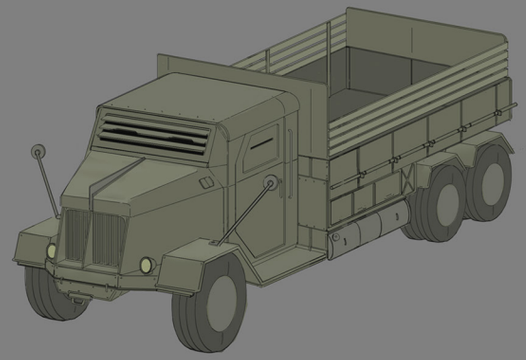

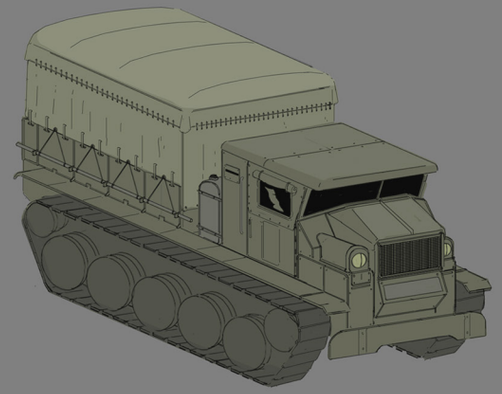

## Heavy-Duty Trucks

As the Heavy Duty Trucks were developed, a key goal for the visuals were to make them look distinct from the faction's normal truck. We did not want the logi players to feel like they were just getting an upsized version of what they already had. The Colonial AU-A 150 Taurine Rigger was meant to give the impression it had off-road capabilities, and was highly capable of towing. This design task was given to our, at the time, new concept artist Luke so both faction's trucks would feel more different then the base trucks.

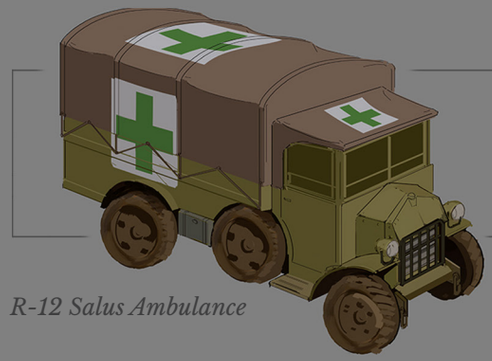

*R-12 Salus Ambulance*

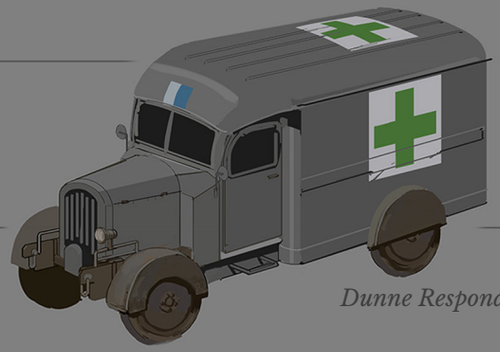

*Dunne Responder 3e*

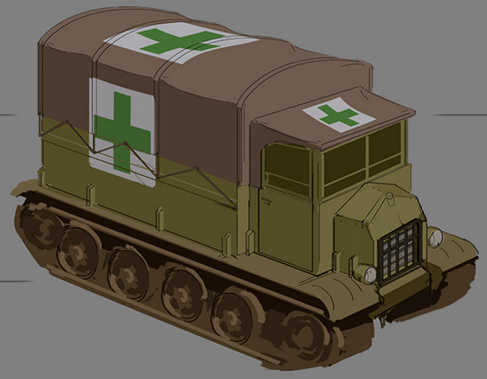

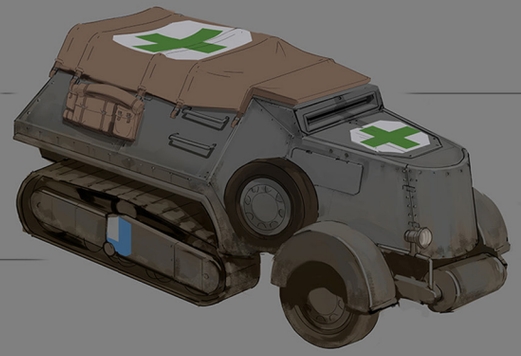

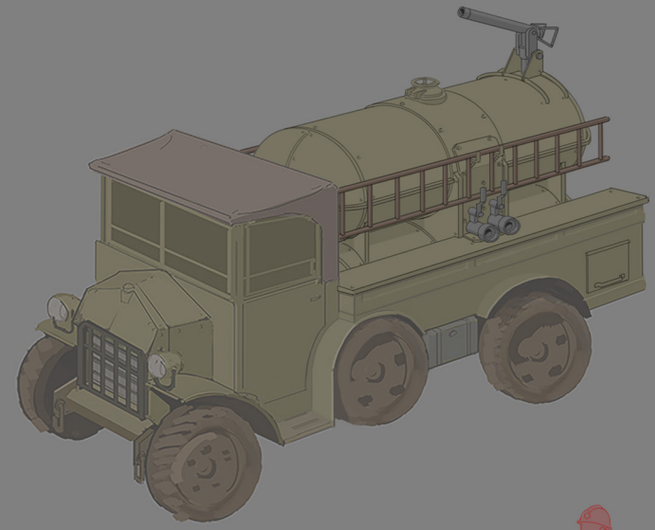

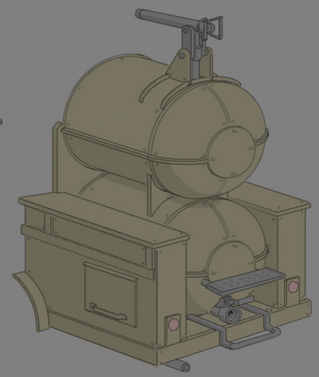

*R-12b Salva Flame Truck*

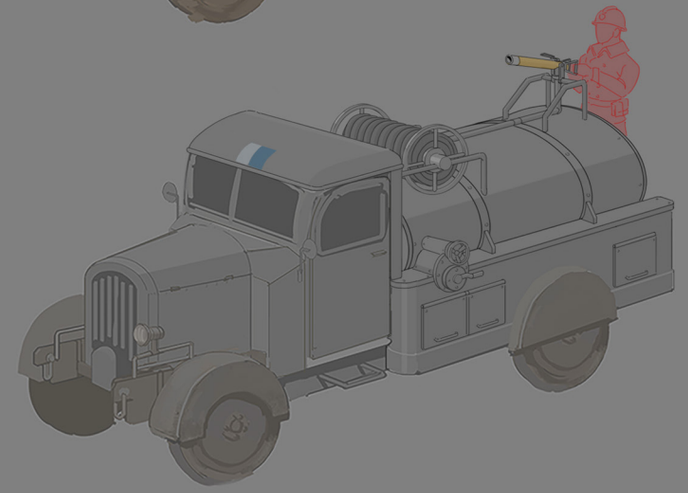

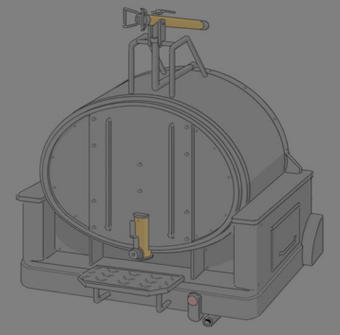

*Dunne Dousing Engine 3r*

## AMBULANCE AND FIRE TRUCKS

The pitch started as a variant of halftracks, and exploring World War One style vehicles allowed us to expand the visuals of each faction. This would add visual story telling, that an old vehicle had been pressed into the war. Additionally there is a fun cute look to the small chassis which was simply appealing. Later when fire trucks were needed, the ambulance chassis was a natural fit.

*BMS - Universal Assembly Rig*

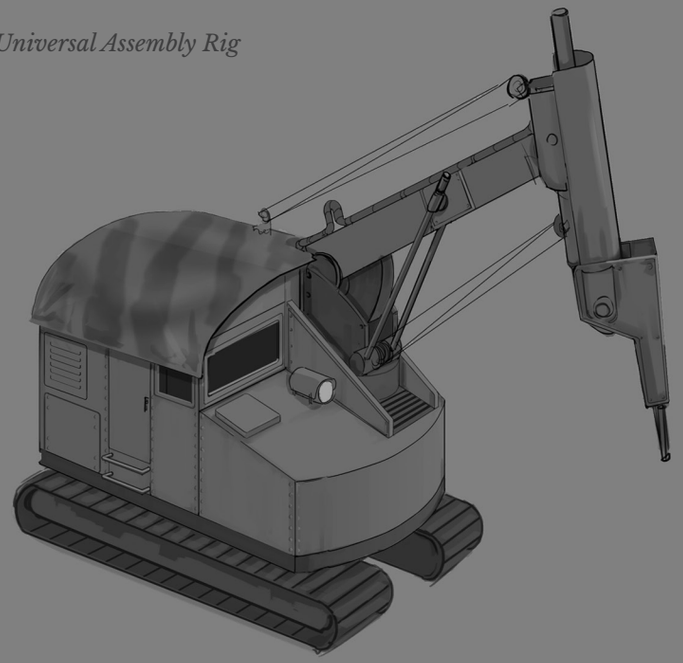

## CONSTRUCTION VEHICLE

Pivotal to the game in a number of ways, the CV was the first faction agnostic vehicle, though we did explore faction specific design ideas. For the gameplay loop of taking over a town, it needed to look slow and compact. The game design also called for 'one mouse click equals one submission of building material per animation', with the addition of a confirming sound effect, Ironically this led the visuals to technically be a demolition vehicle instead of a construction vehicle. However the end result is something that has stood the test of time over the game's life. The CV also started the lore idea of a company selling to both sides. The identifying yellow of the logi vehicles is often joked about as the unofficial third faction.

*BMS - Fabricator*

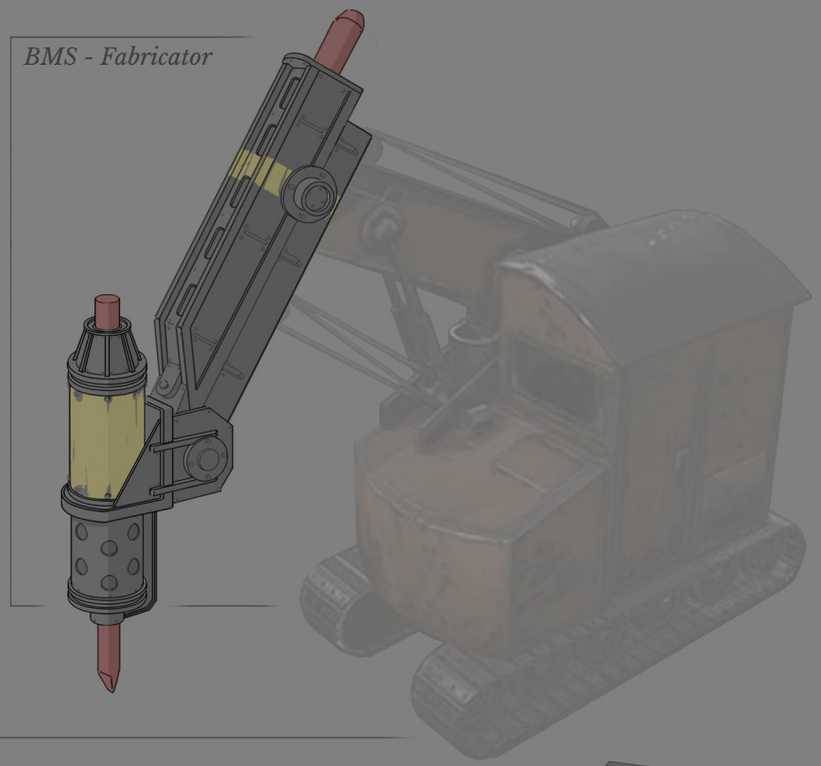

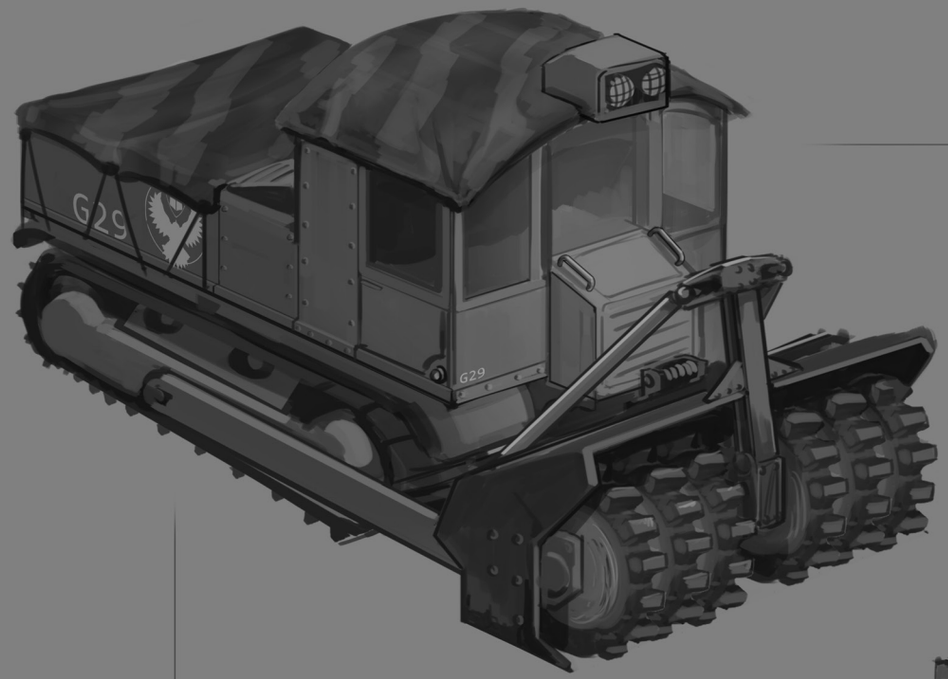


*BMS Scrap Hauler*
*and alternate front design*

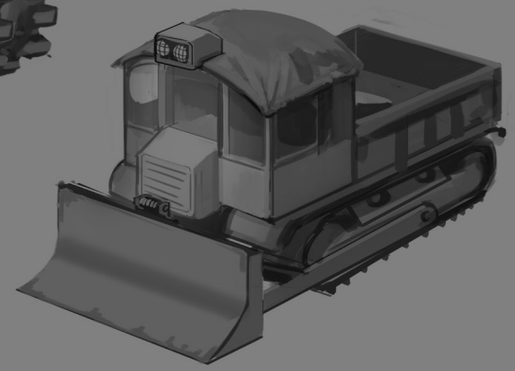

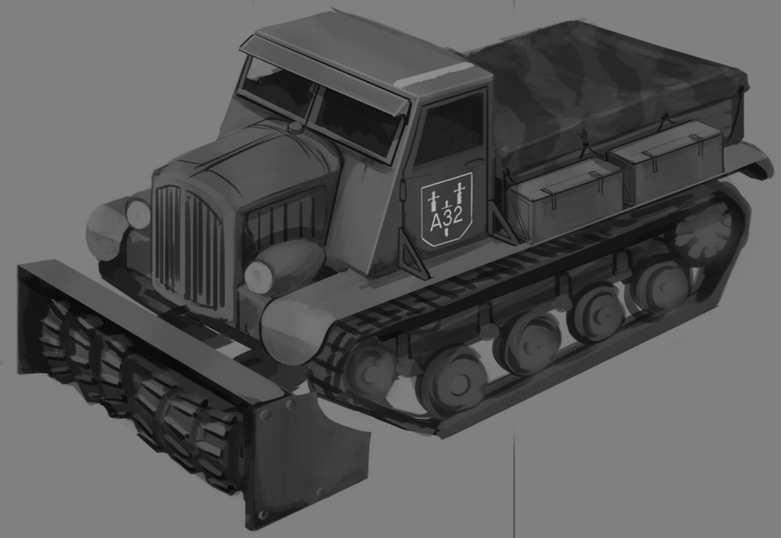


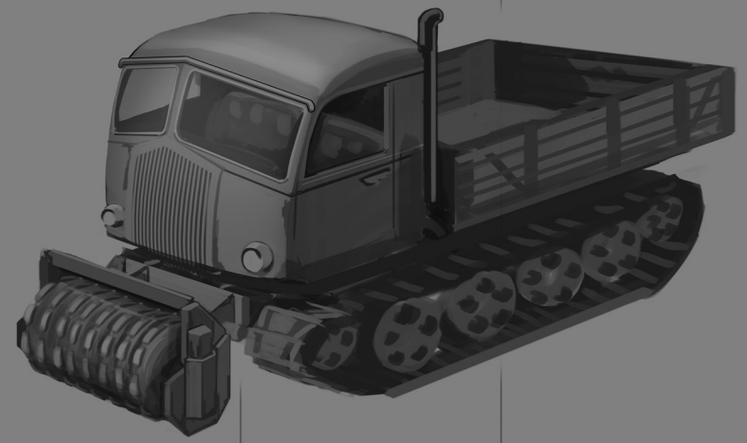

## Harvester

Still early on in the game's life, the harvester was designed to help give the resource gatherers something to work towards on the tech tree. Designed back in 2016, the early construction vehicle art focused on bigger shapes and simpler functionality to match the style of the game at that time. The chassis of the vehicle took from military tractors of the era, with a cartoonish large metal grinder on the front. This was meant to invoke farming equipment, like the obvious combine harvester comparison. The chance to design something that doesn't have a real world analog is always fun. Like the construction vehicles, the idea of a Colonial and Warden variant was considered, but ultimately the design worked best as a yellow logi vehicle.

*BMS - Class 2 Mobile Auto-Crane*

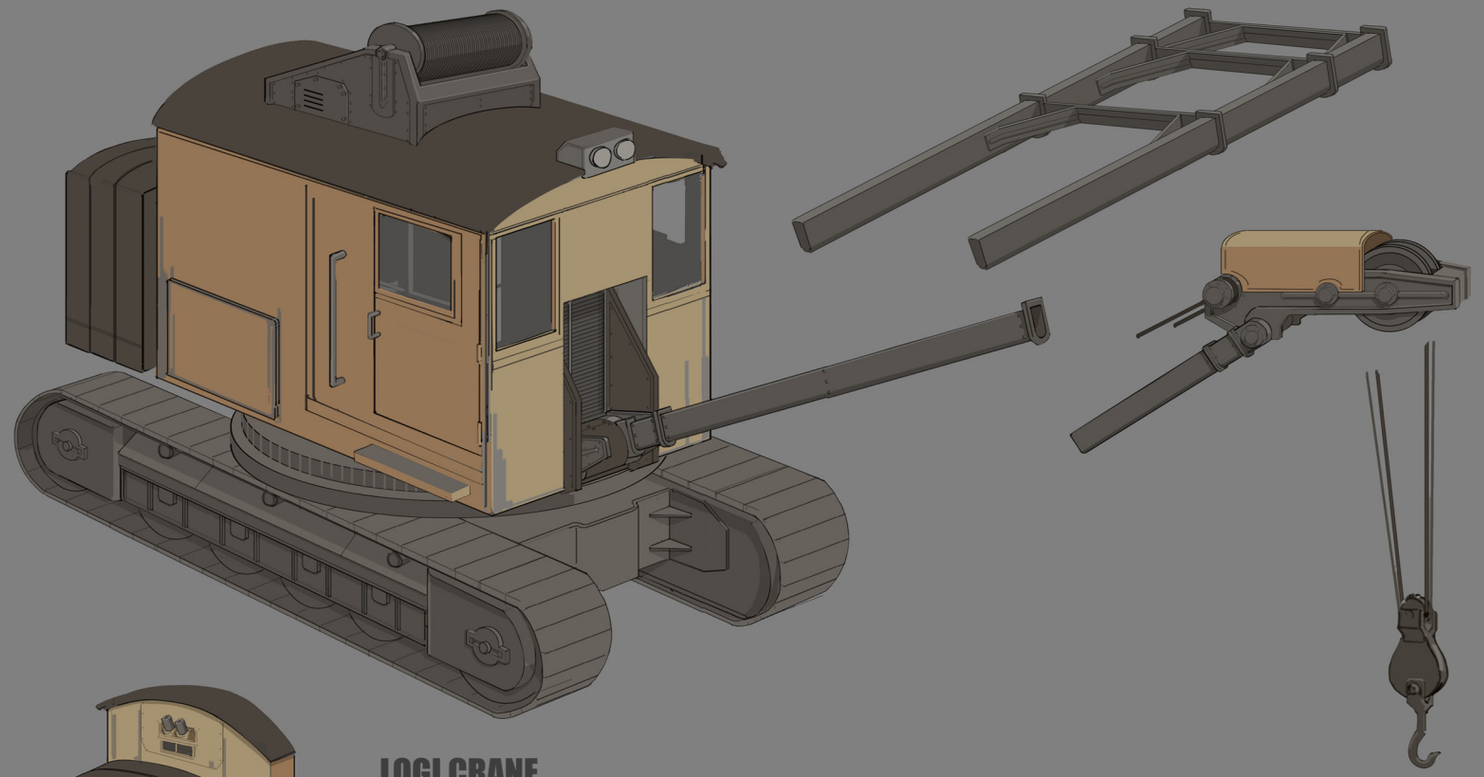

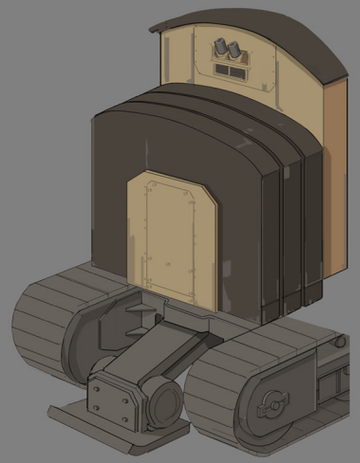

## LOGI CRANE

Developed later than the CV and Harvester, the crane had a few technical challenges we had to address in the design. For the visuals, we didn't want the crane arm to exceed the driver's camera view in height. A few types of crane arm orientations were considered but the final solution came in conjunction with limiting the maximum height to a desired dimension set by game design. An example of this is how high off the ground the flatbed truck would be, or later the train car. Additionally it was felt that the player would need a visual indicator of when they switched from driving to the 'deploy state' of crane operation. The answer was a simple foot pad to anchor the vehicle to the ground. There were many other technical hurdles the programmers had to solve for this vehicle before it was functional in game. Once all was settled, the visuals were pretty easy as the line of BMS logi vehicles grew.

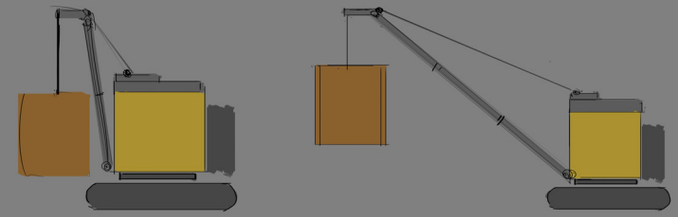

*Alternate Crane Arms*

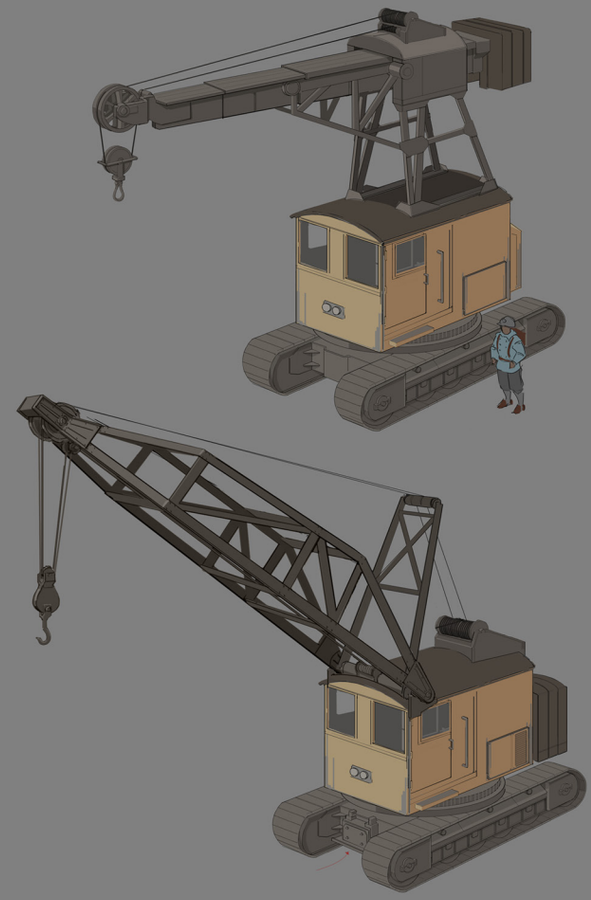

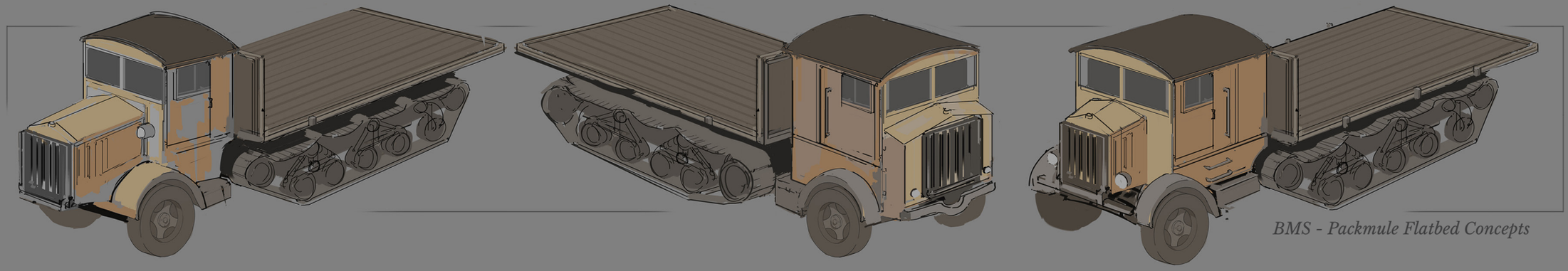

*BMS - Packmule Flatbed Concepts*

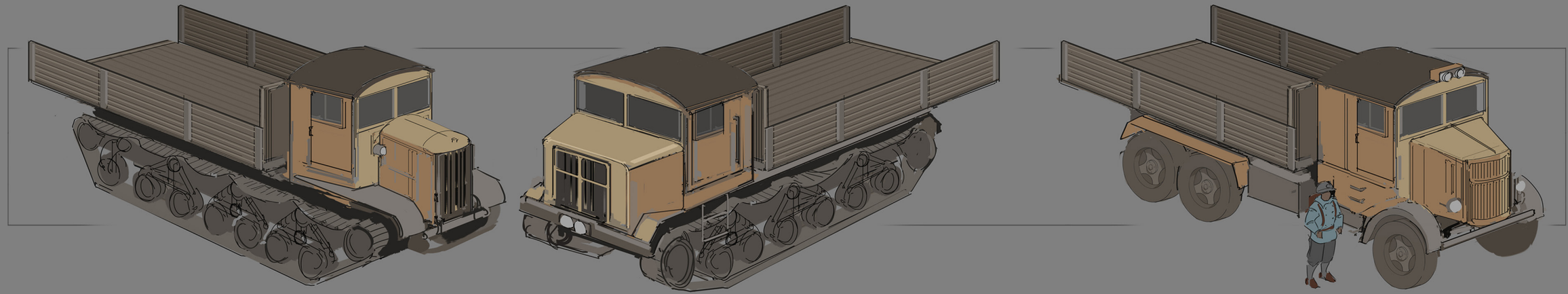

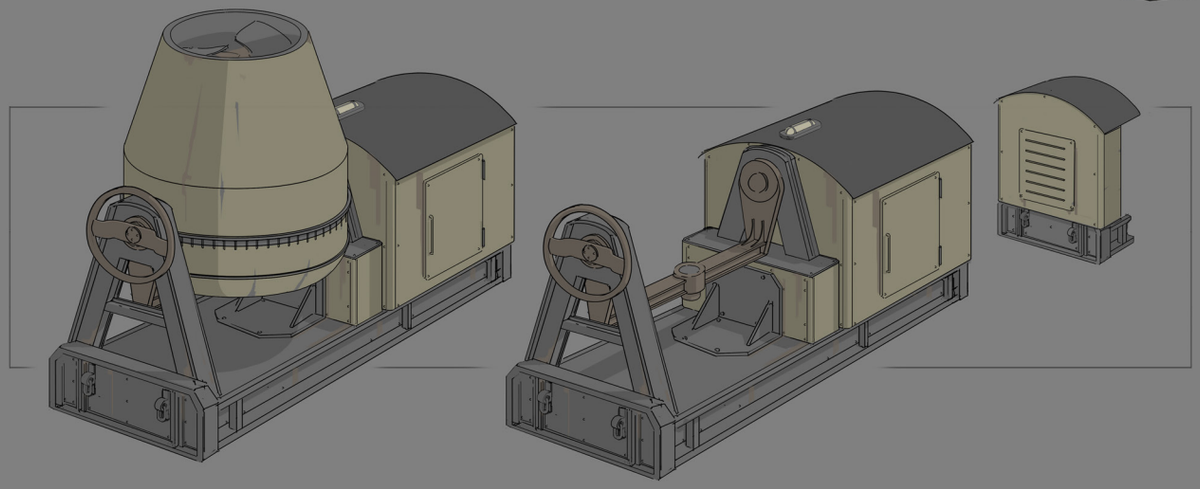

## FLATBED

Designed in tandem with the crane, the flatbed was fairly simple visually. I wanted to  capture the feeling of some of the larger trucks of the 1940s which had been designed to tow tanks. We went with a halftrack style design to sell a larger scale, and to separate the flatbed from the faction logi trucks. By this point in the production of the game, the yellow BMS look was established which made the flatbed a fun and easy design to work on.

The concrete mixer was designed for use with the flatbed and crane as part of a developing feature of shippable assets.

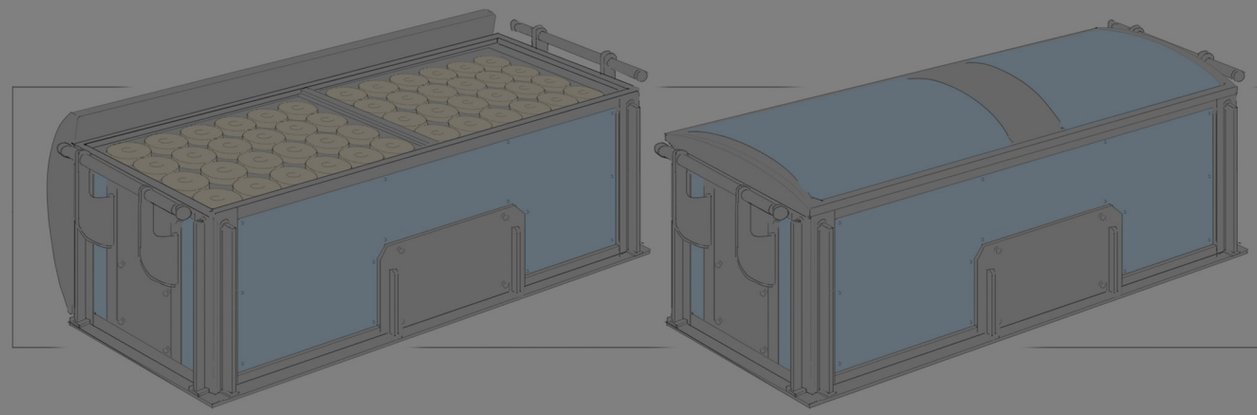

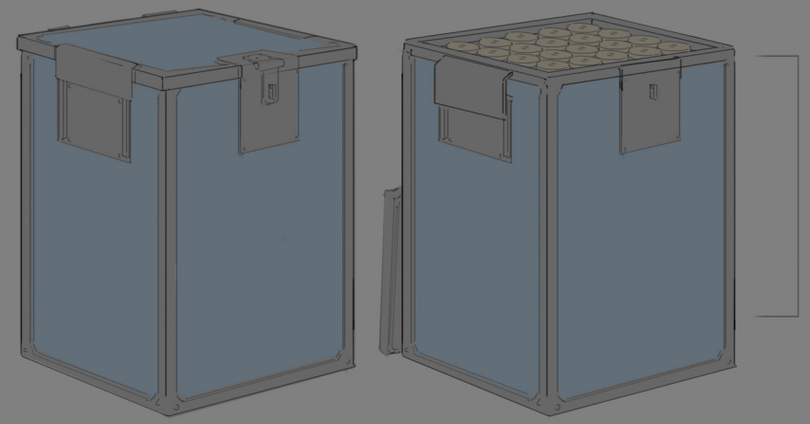

## Shipables

Around the same time, the feature of ‘shippables’ was taking off, utilizing both the crane flat bed and boats. Throughout the production of Foxhole, there have been a number of times when we weren’t sure how far we could take the game. An example of this is trains - we didn’t know if it was technically feasible to achieve, so visually we tried to design the shipping containers to look like train cars. Luckily the team has been able to surpass our own ambitions time and again.

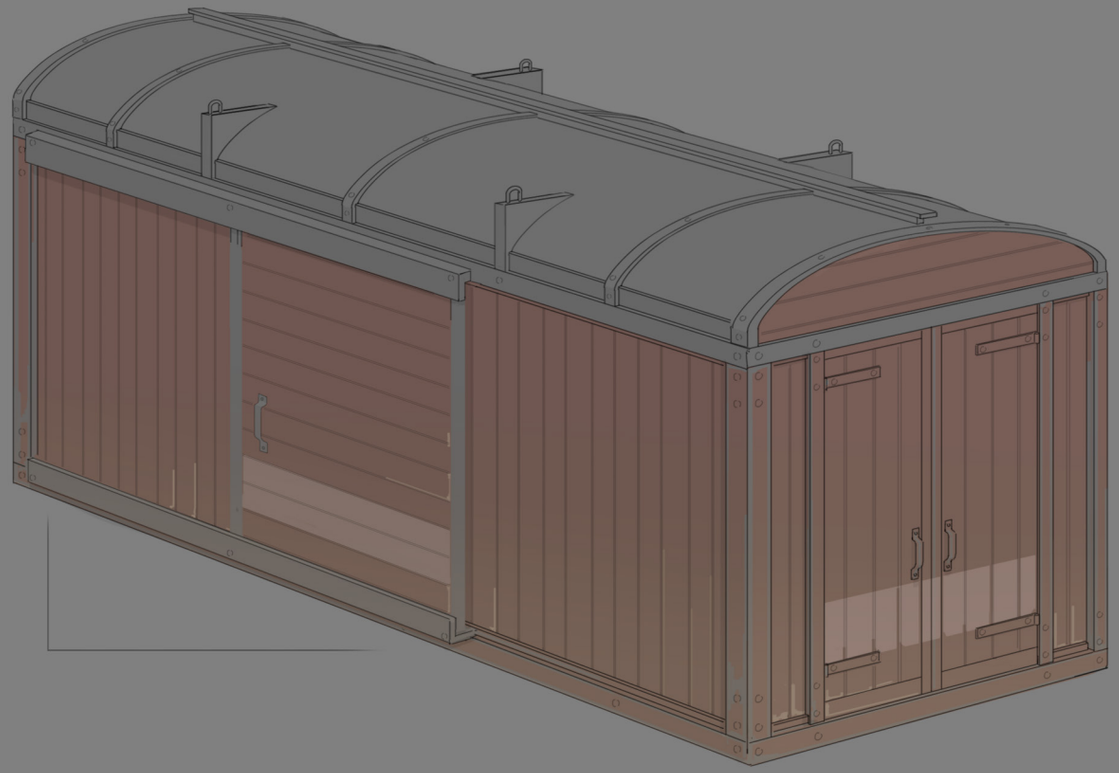

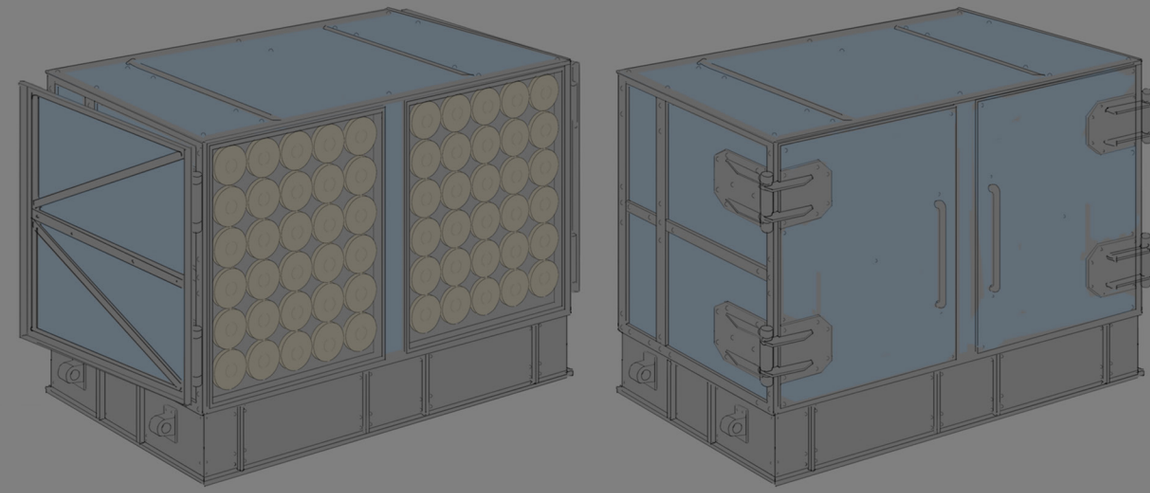

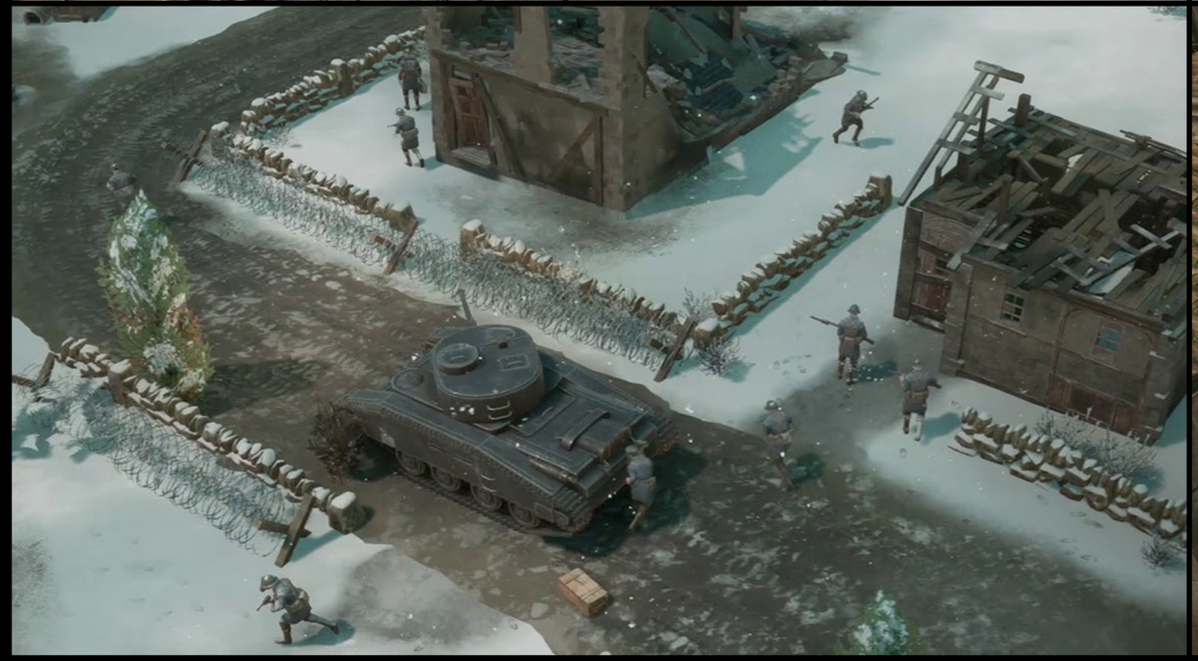

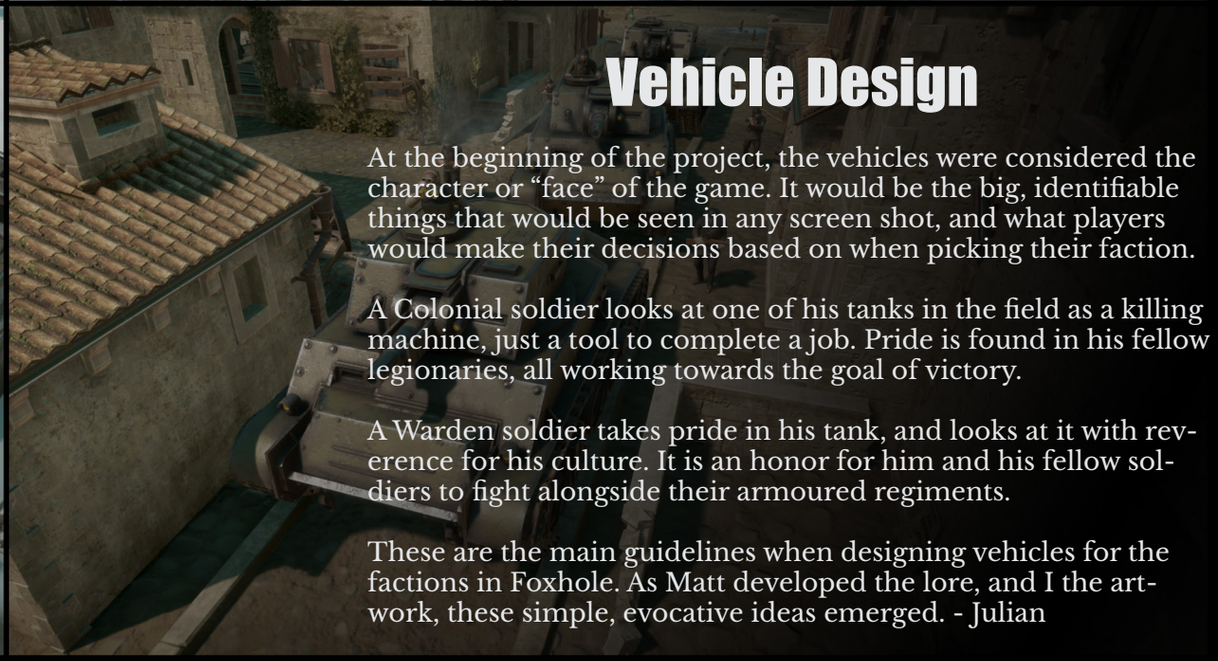

# Vehicle Design

At the beginning of the project, the vehicles were considered the character or “face” of the game. It would be the big, identifiable things that would be seen in any screen shot, and what players would make their decisions based on when picking their faction.

A Colonial soldier looks at one of his tanks in the field as a killing machine, just a tool to complete a job. Pride is found in his fellow legionaries, all working towards the goal of victory.

A Warden soldier takes pride in his tank, and looks at it with reverence for his culture. It is an honor for him and his fellow soldiers to fight alongside their armoured regiments.

These are the main guidelines when designing vehicles for the factions in Foxhole. As Matt developed the lore, and I the artwork, these simple, evocative ideas emerged. - Julian

*UV-05 Collector*

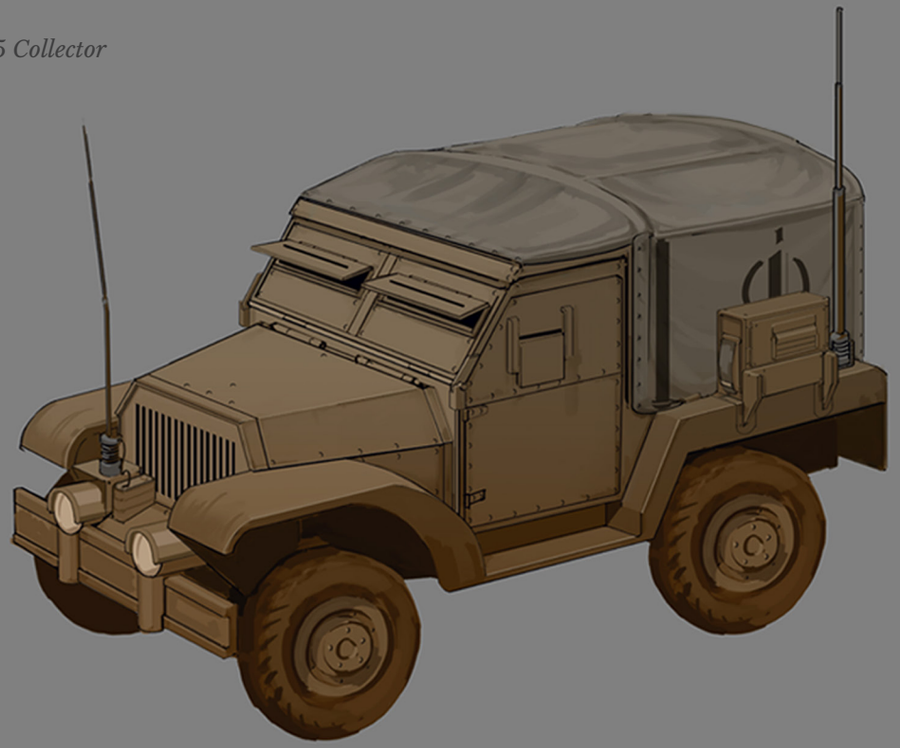

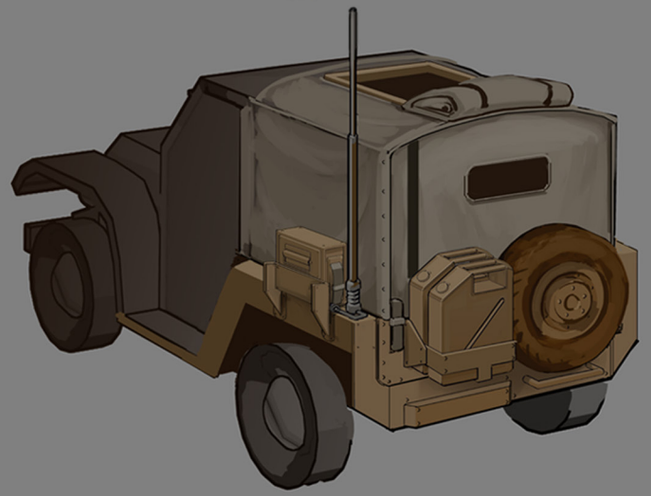

A goal for the LUVs was to develop an intelligence gathering radio device on the vehicle. When I started the visuals we didn't fully know what it was actually going to do in the game. Radio antennas are pretty ambiguous visually so in this case it wasn't a big problem.

## LIGHT UTILITY VEHICLES

Since the beginning, one of the stated outlines for the Colonial aesthetics was to capture the imagery that most players would be expecting from a World War 2 era game. The Colonial LUV design was an engaging challenge of creating an original design for a jeep-like vehicle that would still feel right if seen in photos from the era. A trick I developed on any of the vehicle designs was to go outside and try to imagine the design turning the corner and coming down the road and see if it felt right.

*Early Colonial LUV sketches*

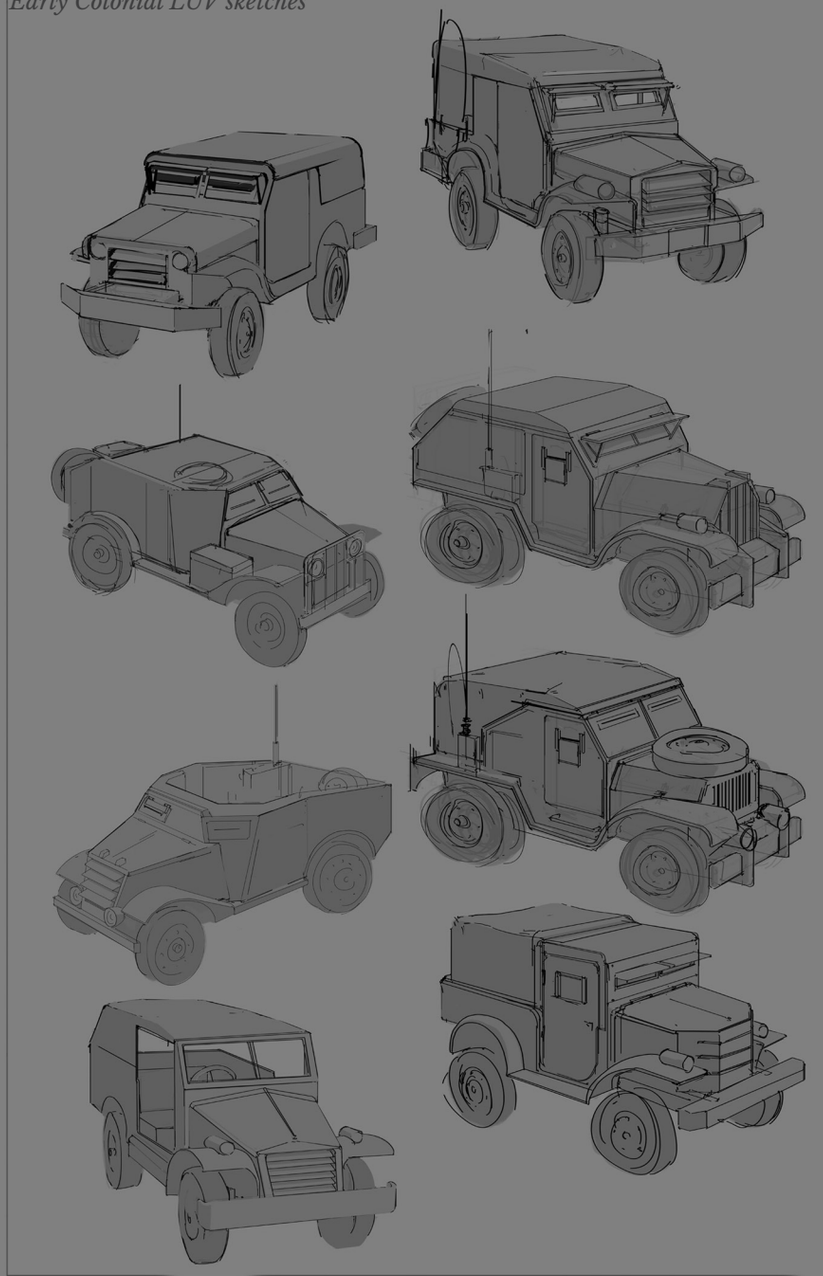

*UV- 05a Argonaut*
This was a variant that became the default vehicle. Some on the game design team prefer open topped vehicles, and the Colonial LUV was an easy sell to make the change. Before vehicle variants, we could not justify the effort of open topped vehicles, since at that time the team was too small.

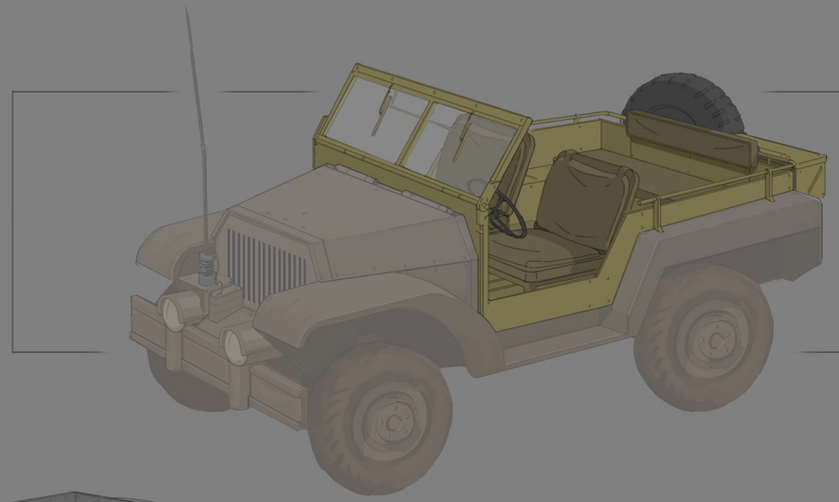

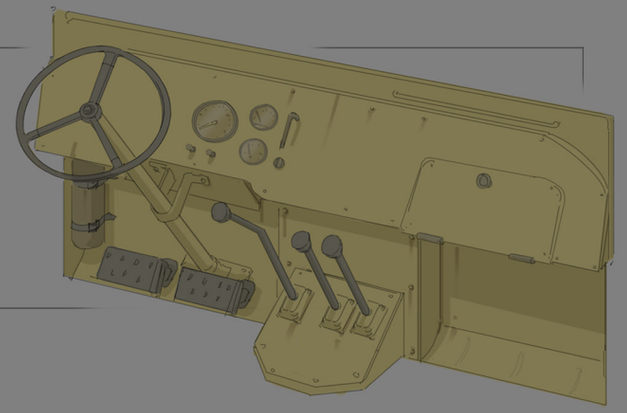

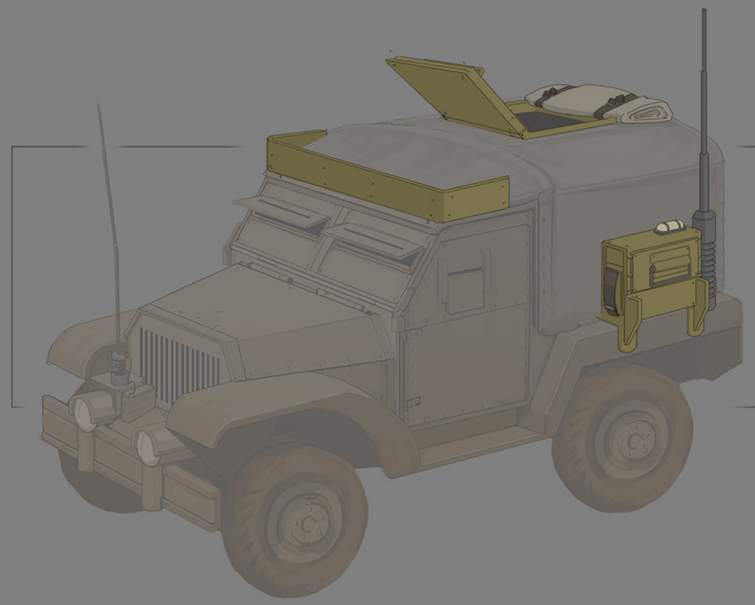

*UV- 05 Collector*
A variant with a commander hatch started as a test to see if it would make a useful variant. It later became the radio option.

*UV-24 Icarus*
This RPG variant has a unique aiming animation. At the time I designed the pose, I thought we would be able to get more use out of the animation, but it still only exists on this LUV.

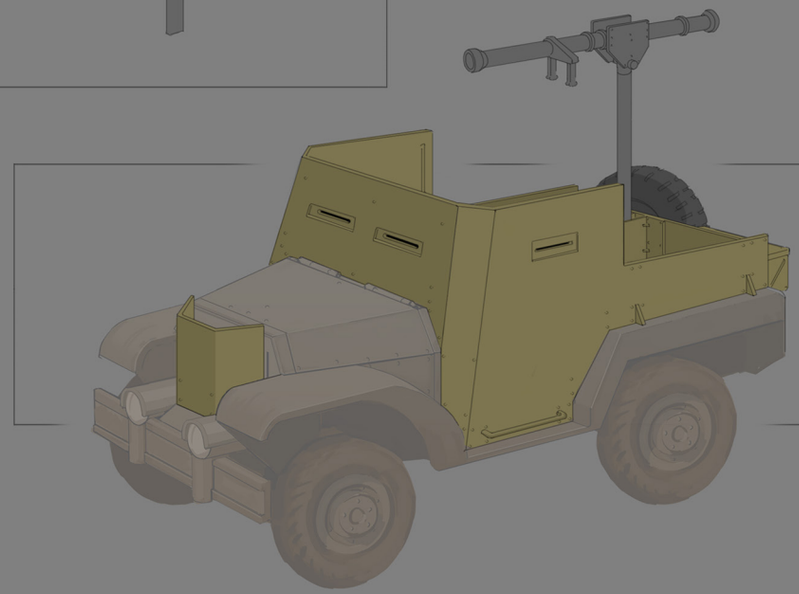

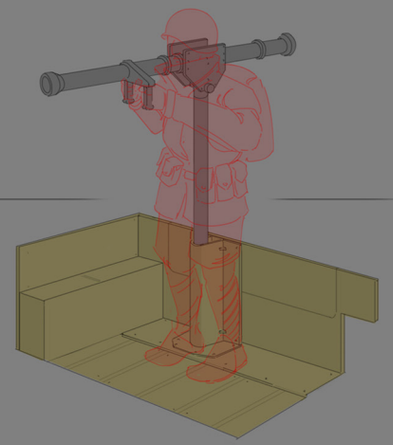

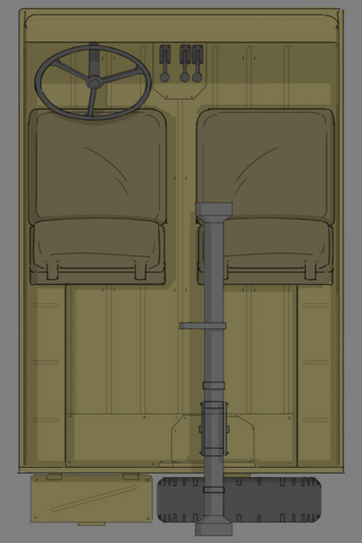

*Drummond 100a*

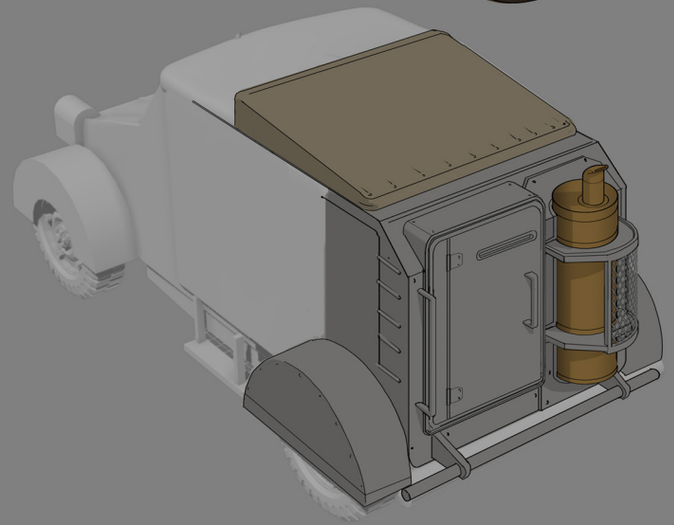

At this point in the development of the faction, the idea of a large muffler was solidified from a one off idea on the light tank into a feature of the faction's identity.

## LIGHT UTILITY VEHICLES

The Warden LUV was a harder design to nail down. This vehicle was key to cementing the visual language for the Wardens, though at the time it wasn't obvious. An objective was to make this feel more European compared to its Colonial counterpart. A lot of 1930's era European cars were referenced. In the sketches you can see larger swings were taken to find what would feel correct. What resonated was an armoured chassis that was overly engineered. Seen on the next page are two competing ideas that were taken further towards a final design.

*Early Warden LUV sketches*

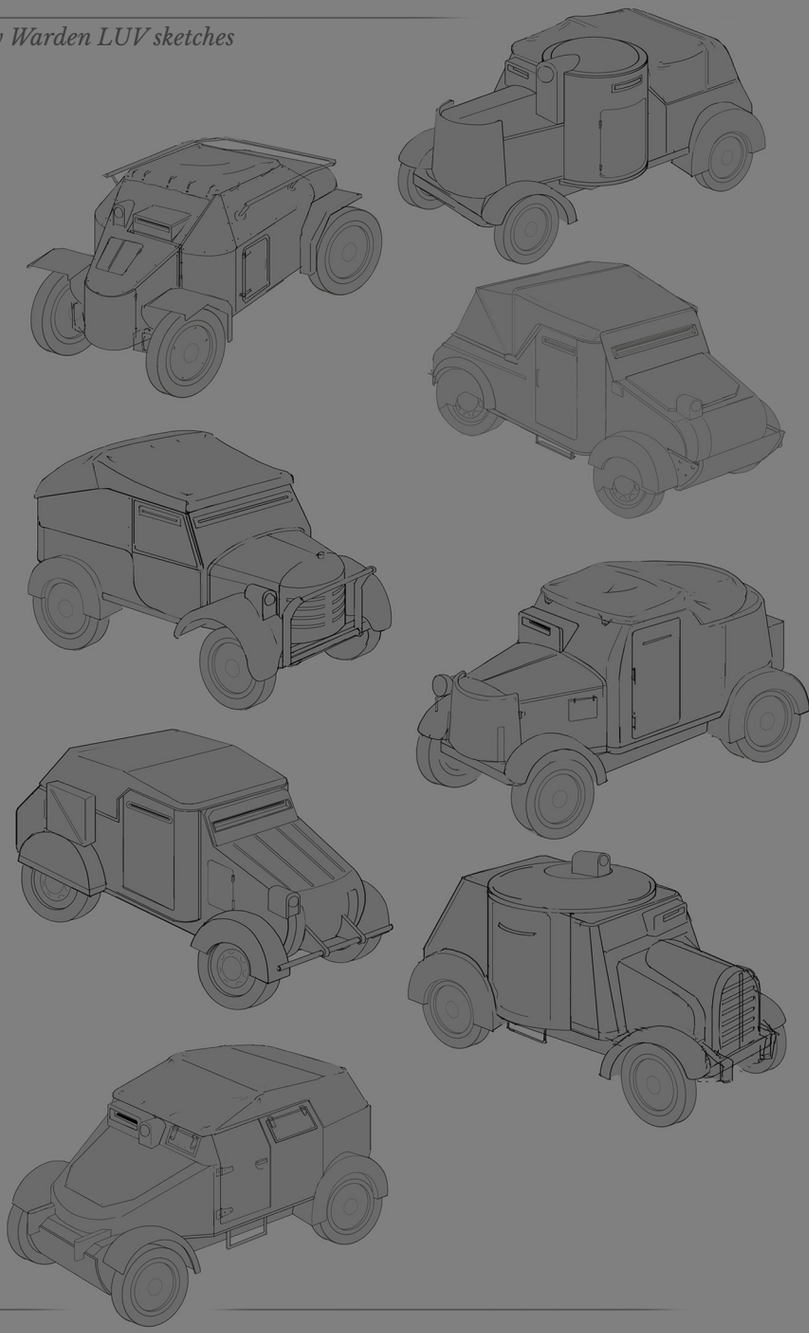

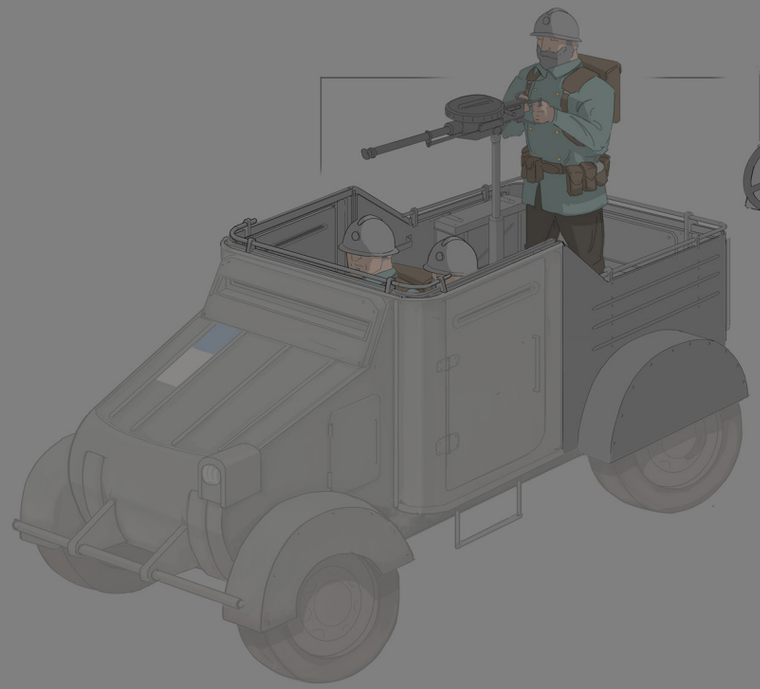

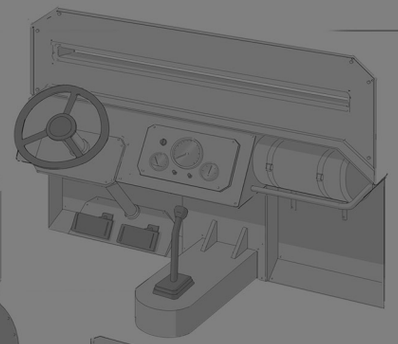

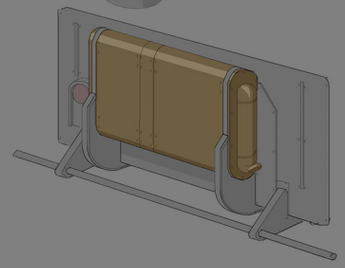

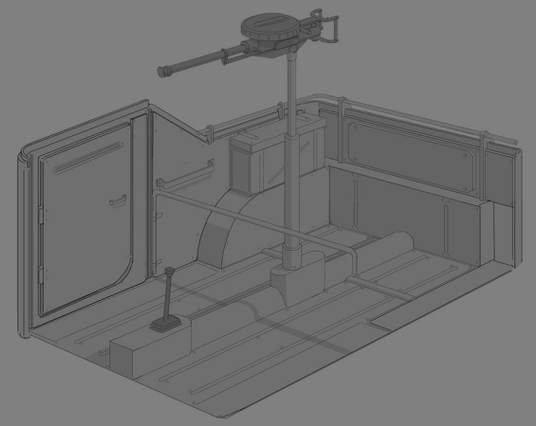

*Drummond Spitfire 100d*
Once we could make an open topped variant of the LUV, one with a light machine gun was an easy idea. It seemed visually more unique to put it on the Warden LUV at the time and the Colonials got the RPG.

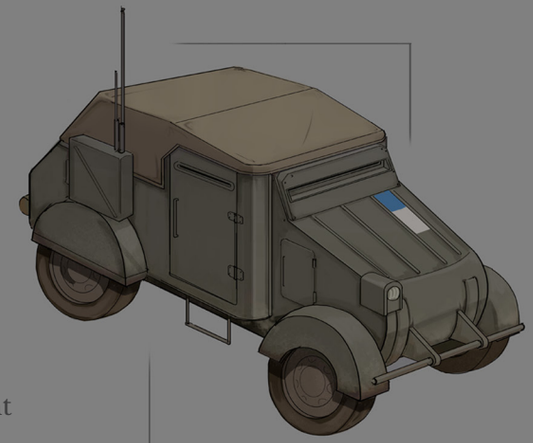

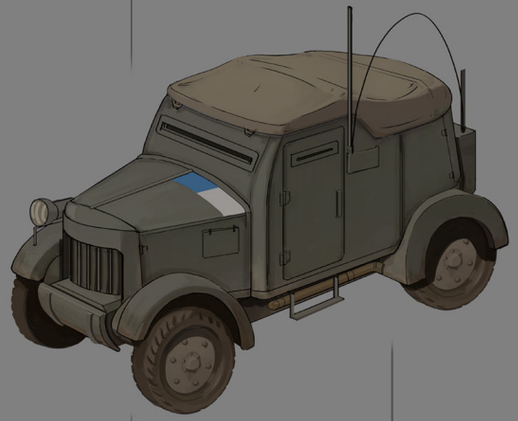

*Two competing Warden LUV designs*

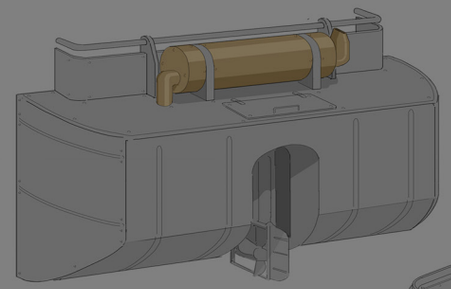

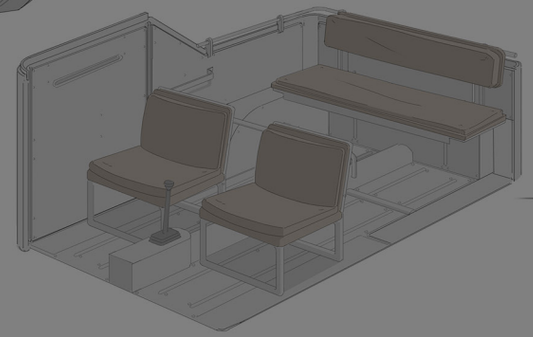

*Drummond Loscann 55c*
An amphibious LUV was a bit of a hard sell, since amphibious vehicles were difficult to implement.

*AB-8 Acheron*

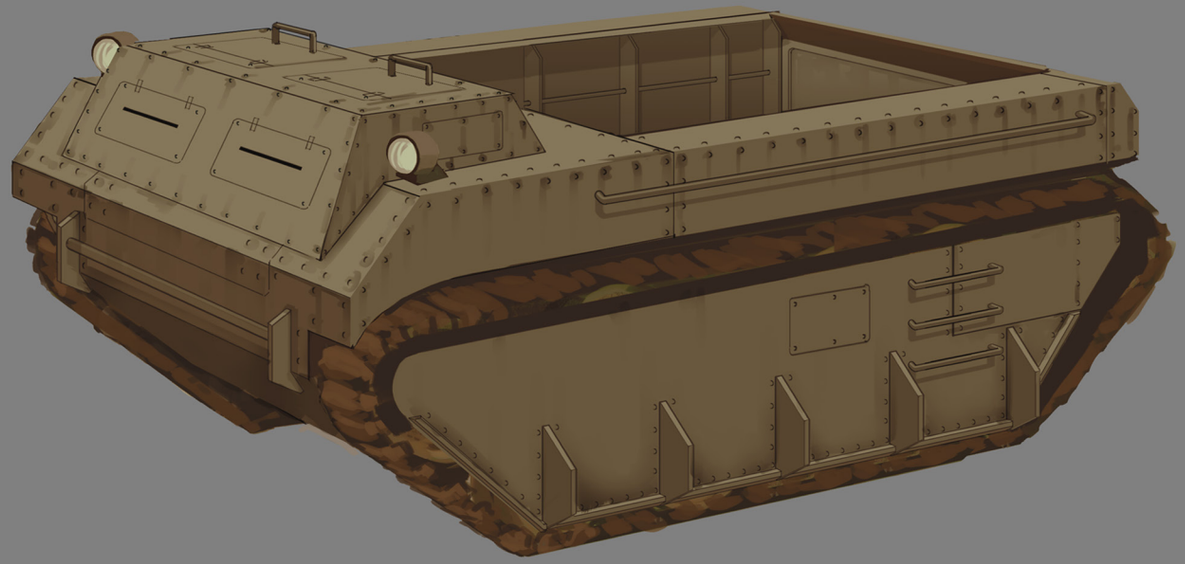

## LANDING APC

The idea of beach landings was a large goal for the team early on. The war story of storming a beach is something we wanted players to experience together. At the time, the game's scale and player count was smaller - this meant that an amphibious lander would be used more than a boat. Amphibious vehicles however, created many technical issues at the time and the scope of them was reduced.

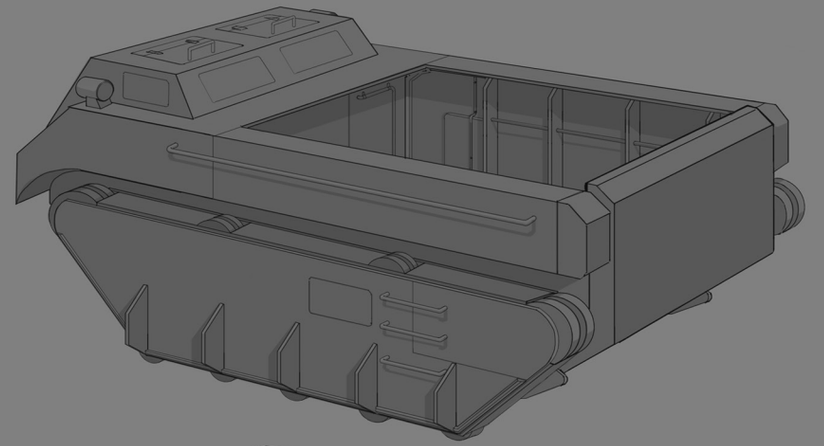

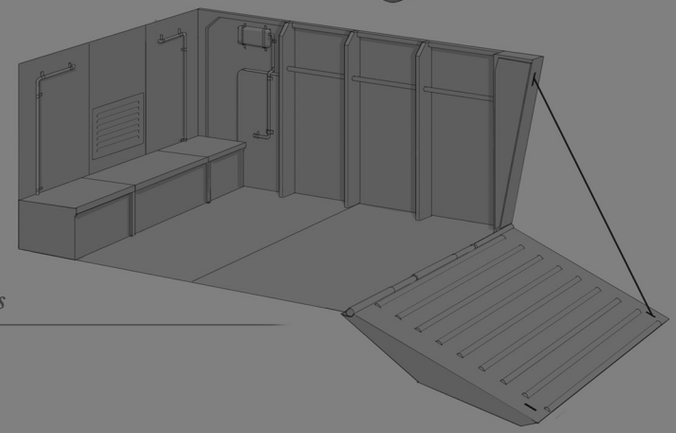

*Interior Details*

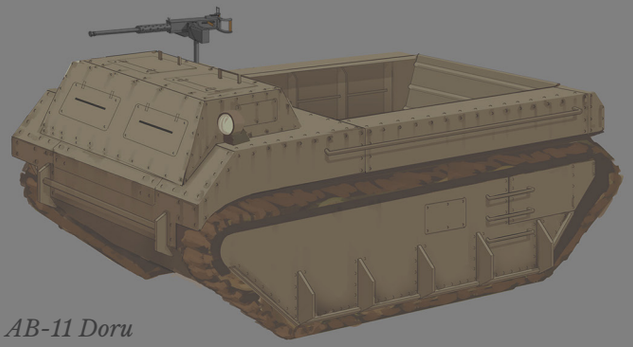

*AB-11 Doru*

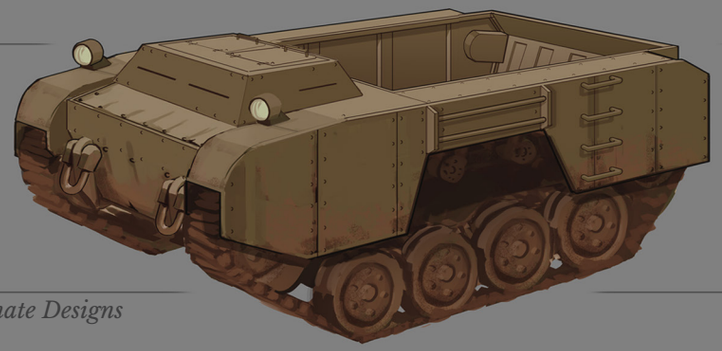

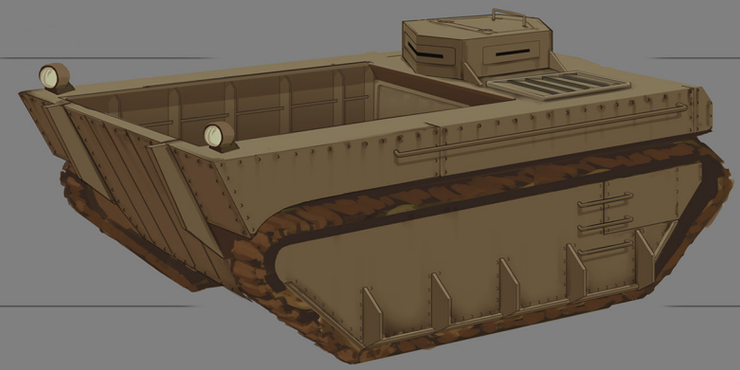

*Alternate Designs*

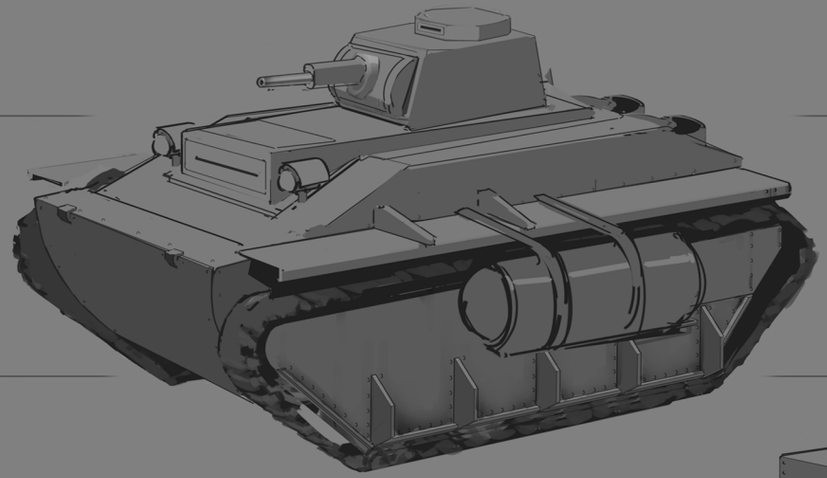

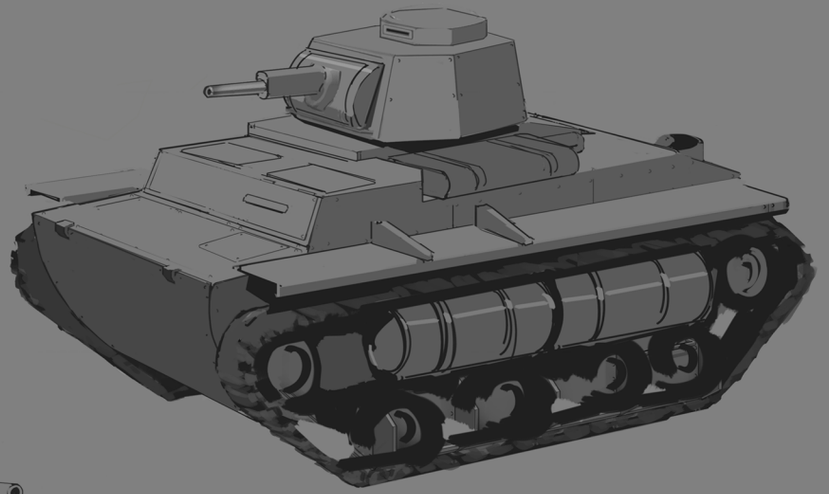

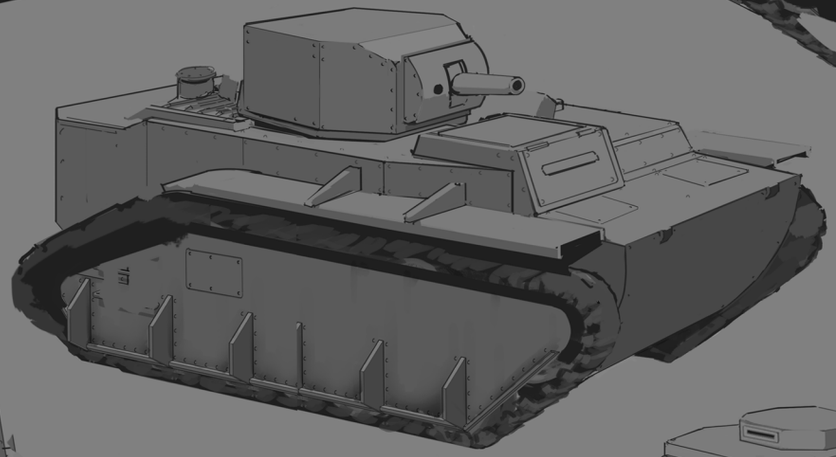

## Amphibious Tanks

At the same time as the Landing APCs, work on amphibious tanks concepts began. Unfortunately the technical issues with all Amphibious vehicles killed off interest in exploring the idea. Years later with full naval combat it might be time to re-explore the idea.

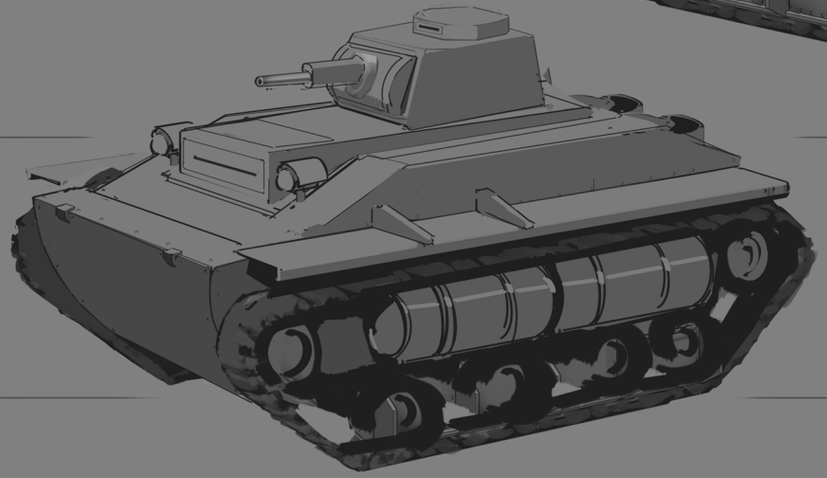

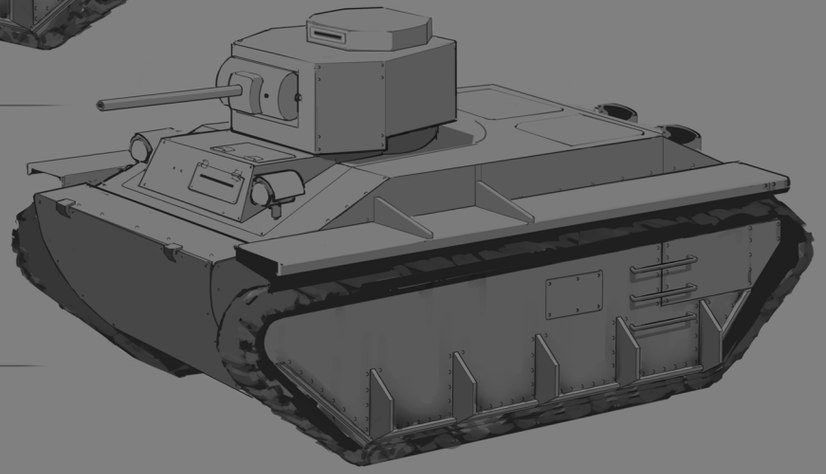

*Mulloy LPC*

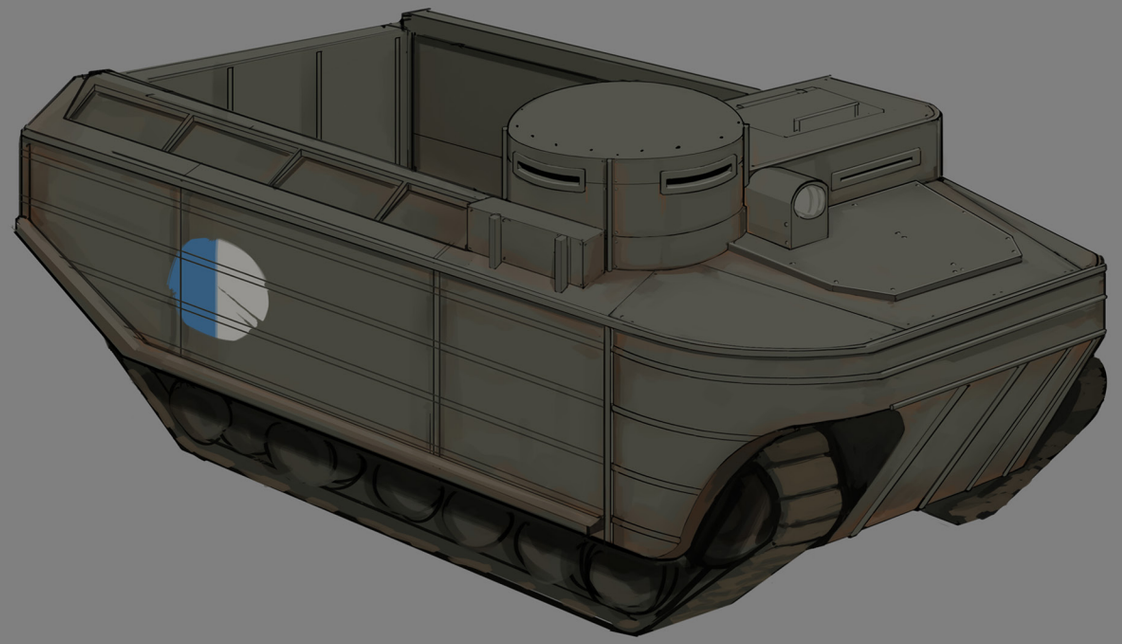

## Warden Landing APC

Similar to the Warden light utility vehicle, the Warden Lander APC was harder to nail down than its Colonial counterpart, so several designs were tried. Inspiration came from the Japanese Type 2 Ka-Mi and American DUKW.

Faction symmetry was still the goal for the vehicles in the game. Adapting to the proportions of the Colonial LAPC, the design started to look somewhat like a bathtub with tank tread. This was a good start. The idea of an overengineered cupola matching the round turret of the light tank brought the design together.

The addition of amphibious vehicles was one that tested the limits of the game physics at the time, and forced the team into hours of testing. The LAPCs had to be driven up and down the beaches in different areas to test how they would respond to different angles. Everyone on the team faced the monotony of testing and did their part in finding the vehicle's limitations.

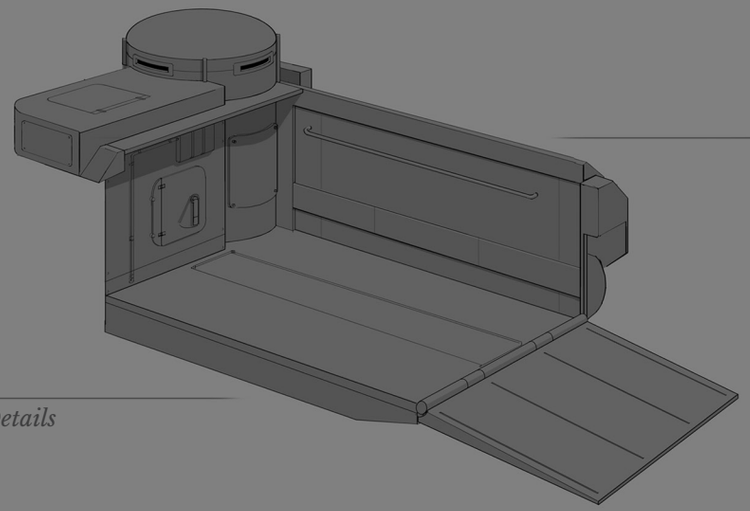

*Interior Details*

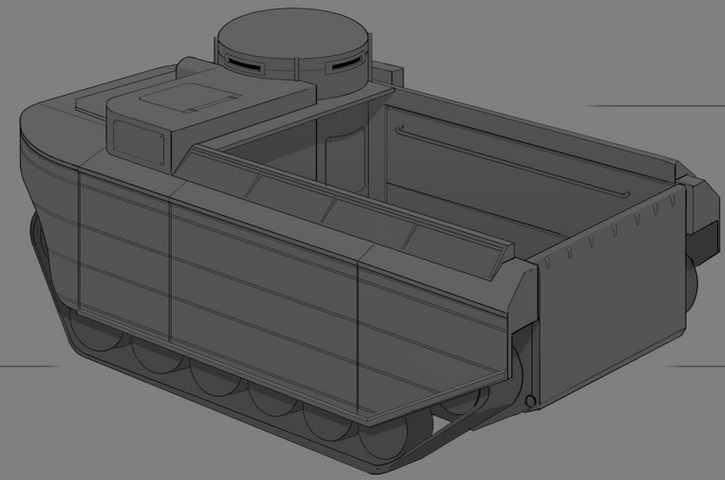

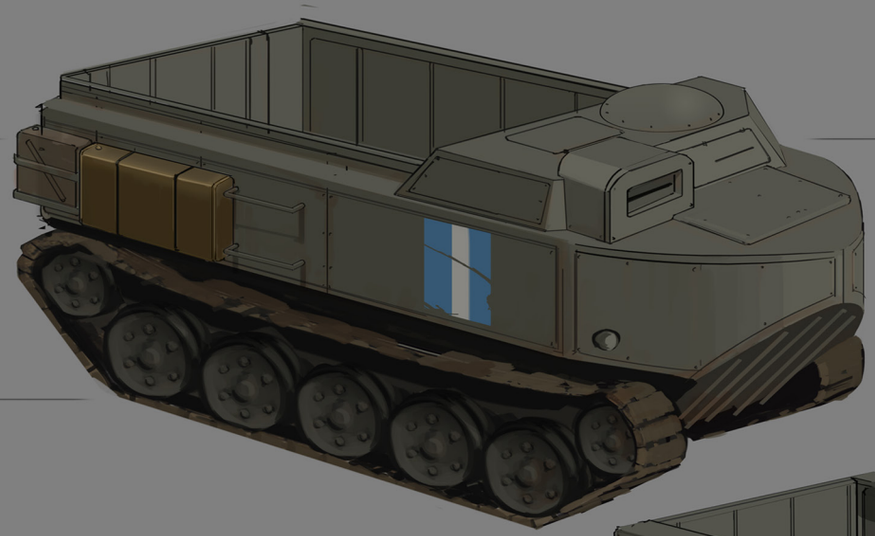

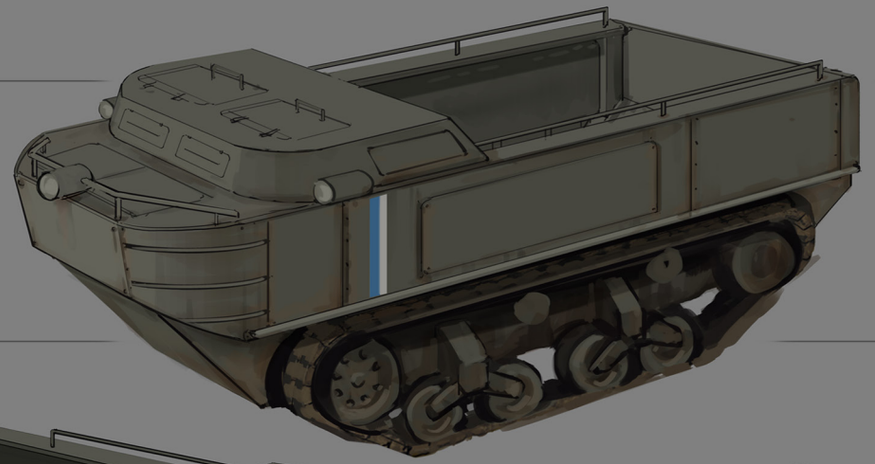

*Alternate Designs*

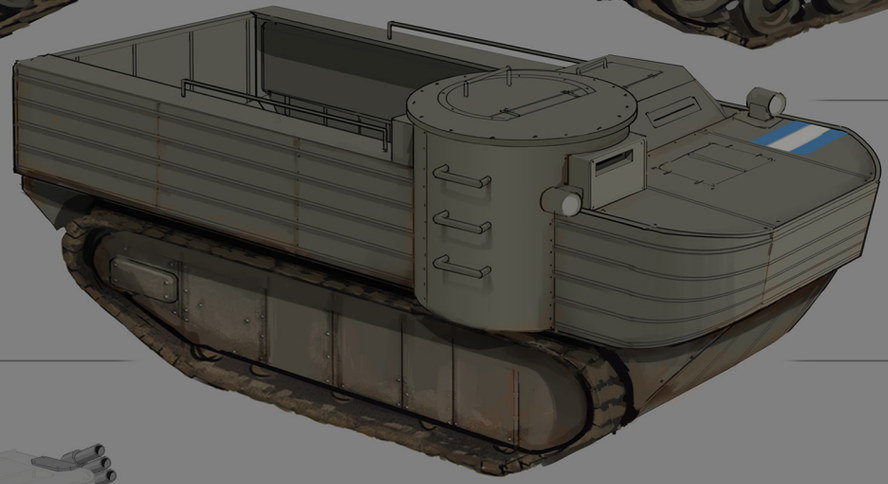

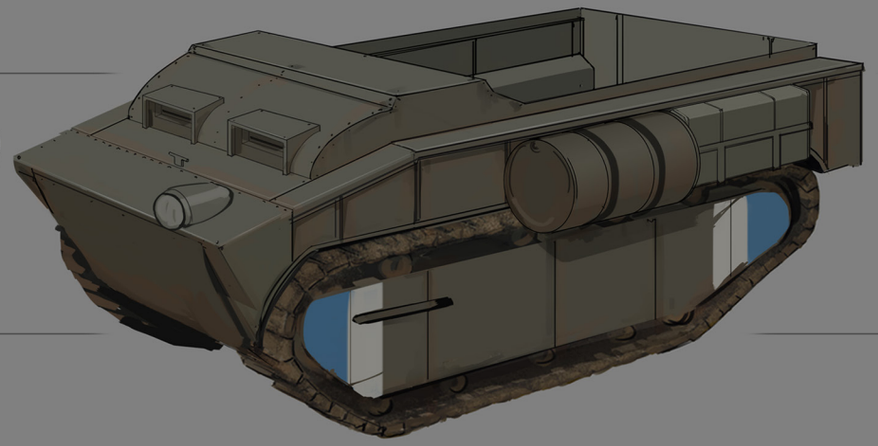

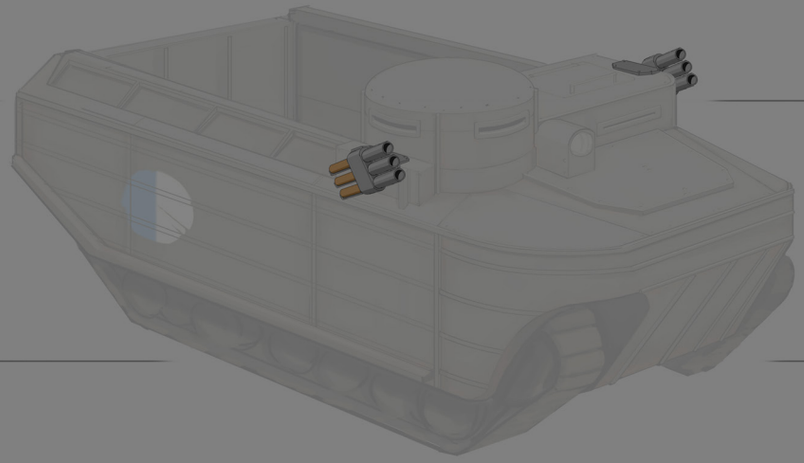

## Smoke Launcher Variant

When vehicle variants were developed, there was an attempt to add smoke launchers to the Warden LAPC. Internally, we have not been happy with the functionality of smoke interacting with vehicles, and the idea got put on hold.

*T3 Xiphos*

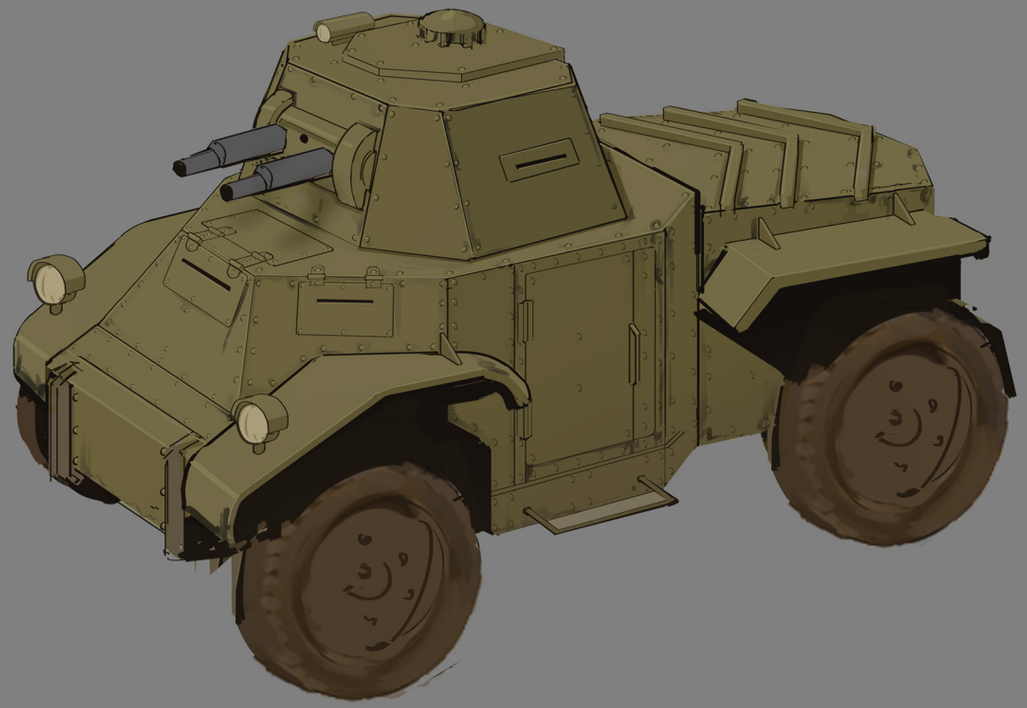

## Armoured Cars

Both the Colonial and Warden armoured cars were designed when the game was symmetrical. Early in production, keeping the proportions similar to share the same rig also influenced the design choice. However, alternate ideas closer to the armoured cars of World War One were explored.

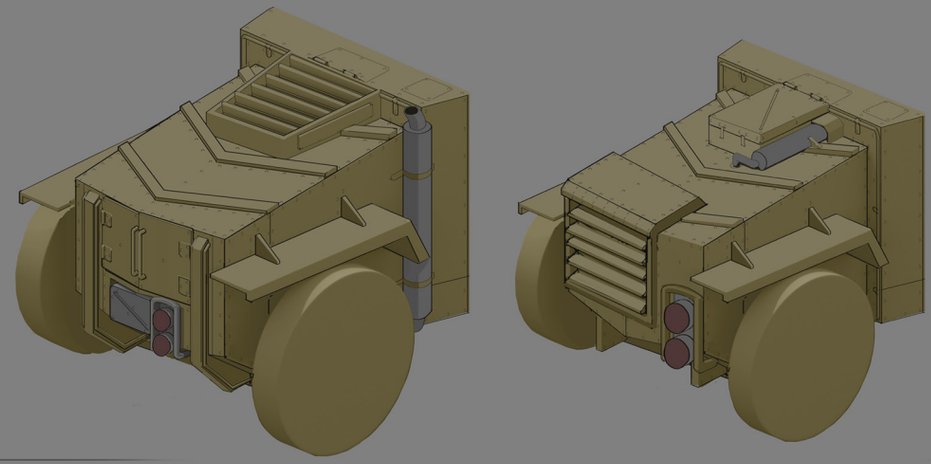

The belief that older looking trucks would be the clear choice from the team was wrong. Instead, it was decided that these armoured cars should feel compact and small.

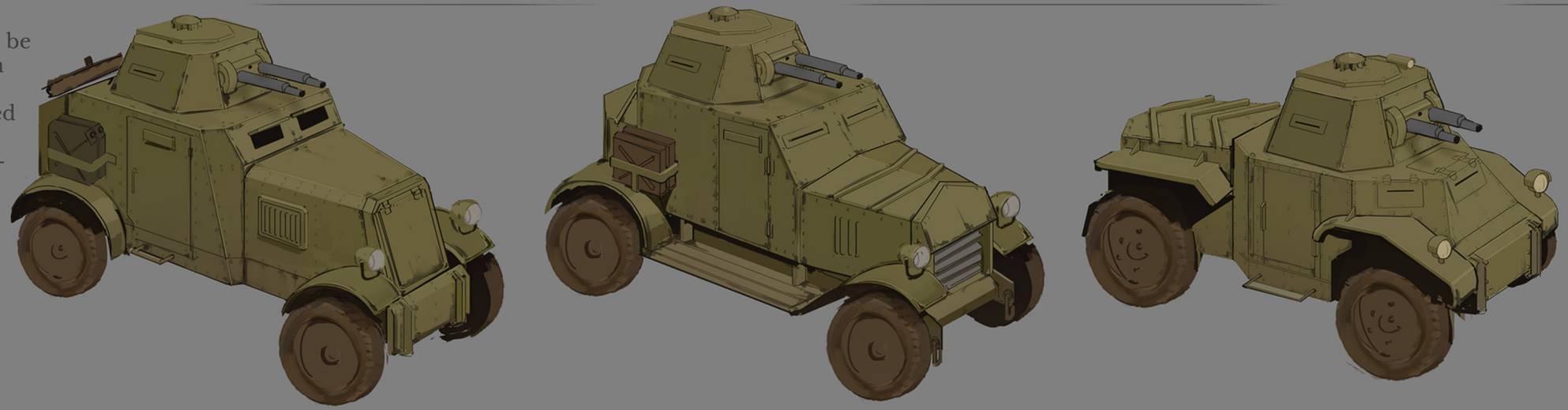

*Unused Grenade Variant*

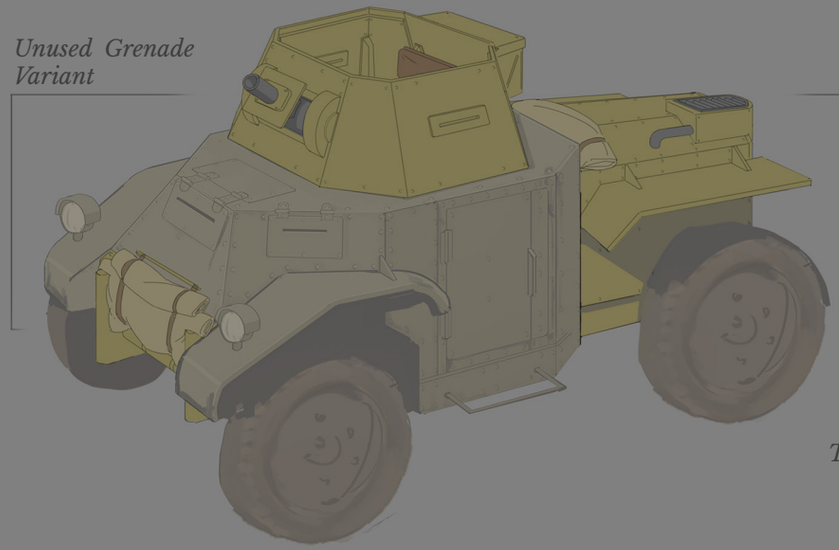

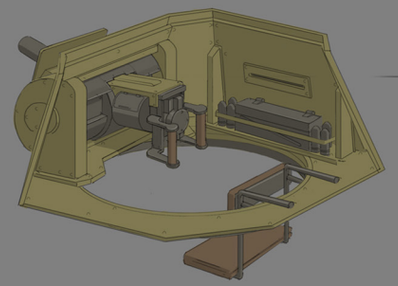

*Unused Armour Variant*

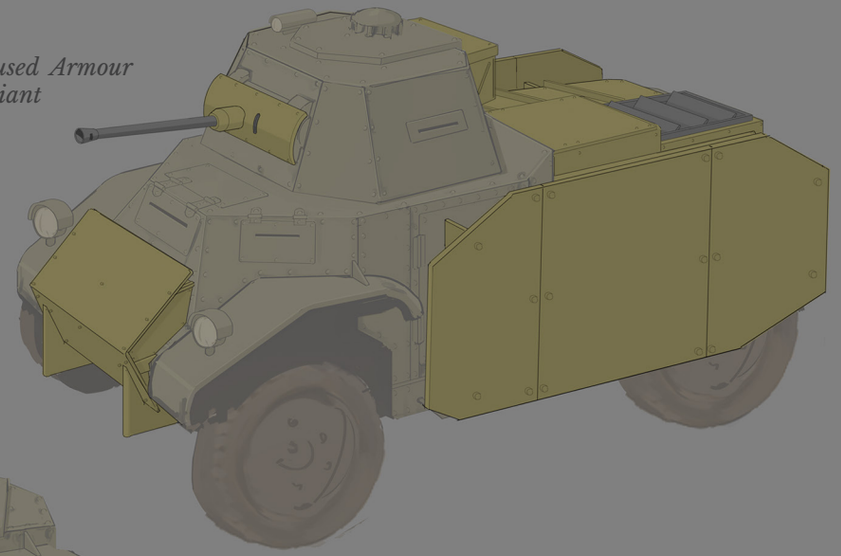

*T8 Gemini*

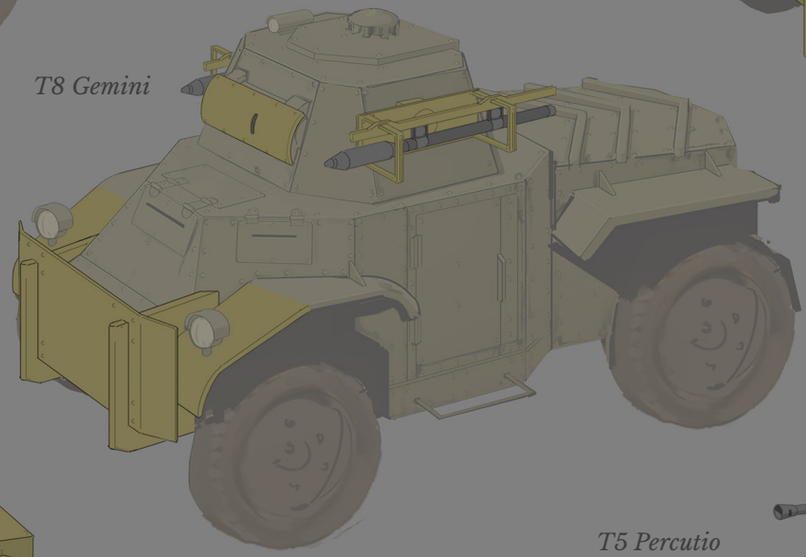

Despite a number of attempts, ‘up armoured’ vehicle variants have never caught much traction internally. Vehicle armour as a core feature with its own game play loop was priority.

*Unused Armour Variant*

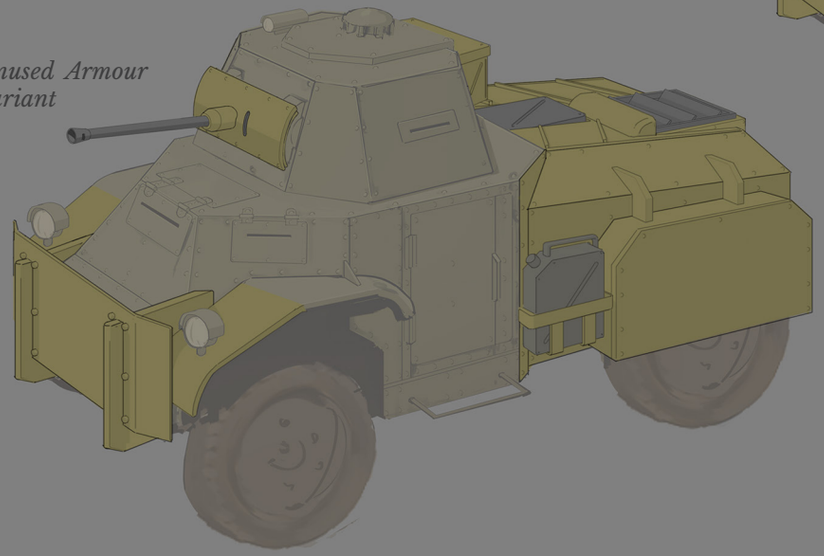

*T5 Percutio*

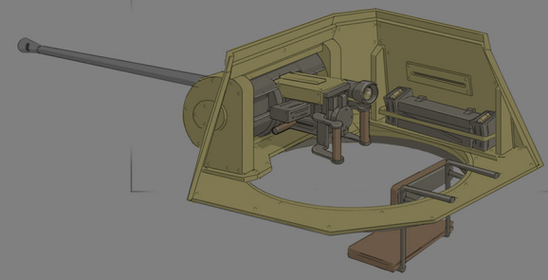

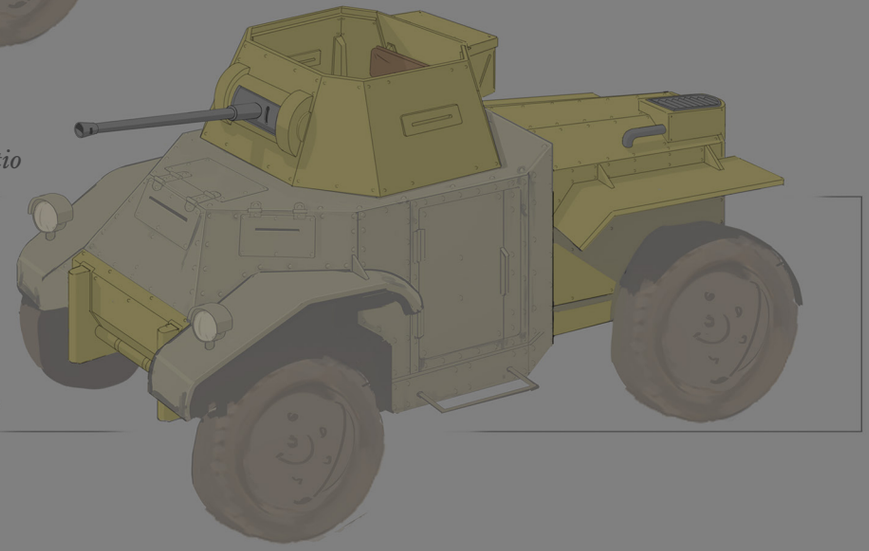

*O'brien V.110*

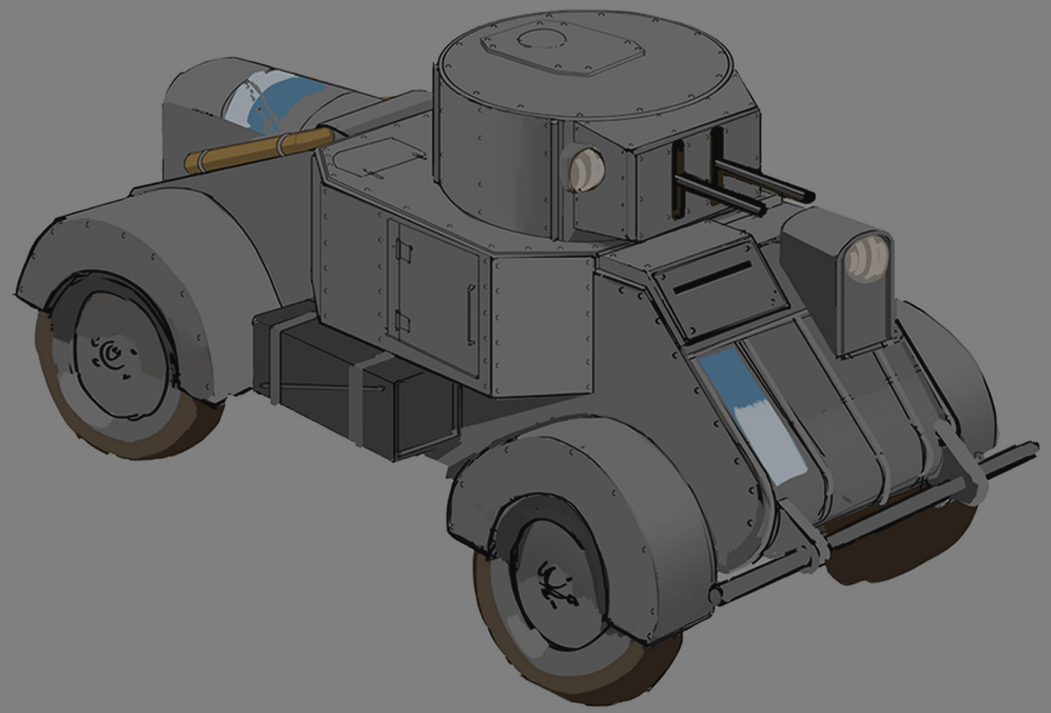

## Armoured Cars

The small shapes of the armoured cars are a fun combination of World War Two scout cars and World War One armoured tractors. At the time, we were really exploring the idea of Foxhole vehicles being a mash up of the two different eras while trying to avoid full on dieselpunk. The idea that it might have existed was always the priority.

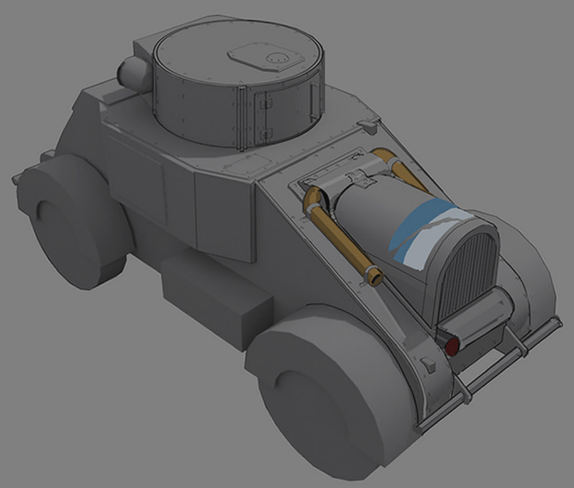

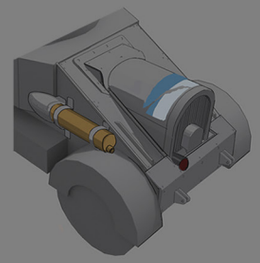

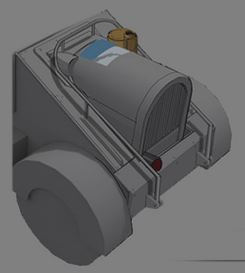

Later when the game embraced asymmetric factions, I wanted to come back and revisit some of the heavier looking armoured car designs.

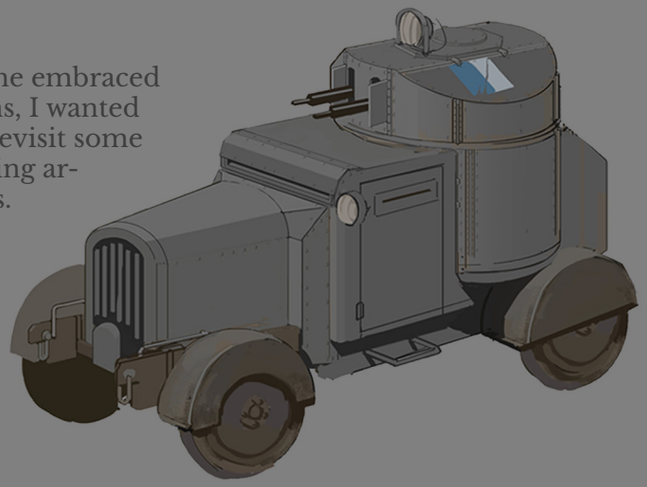

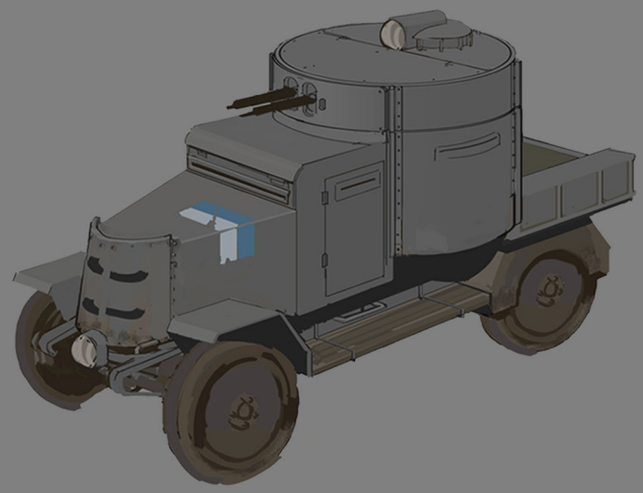

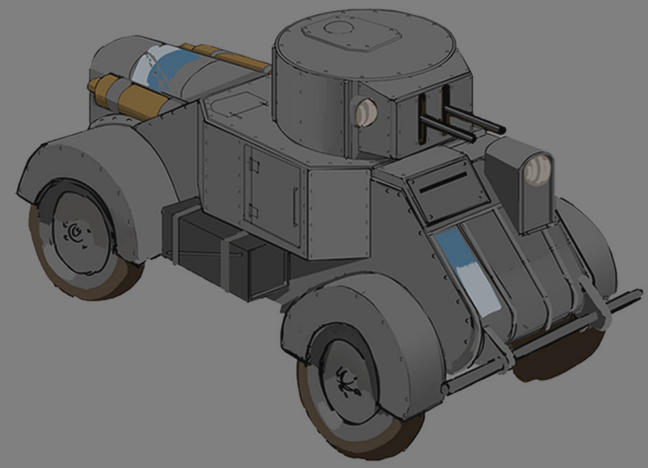

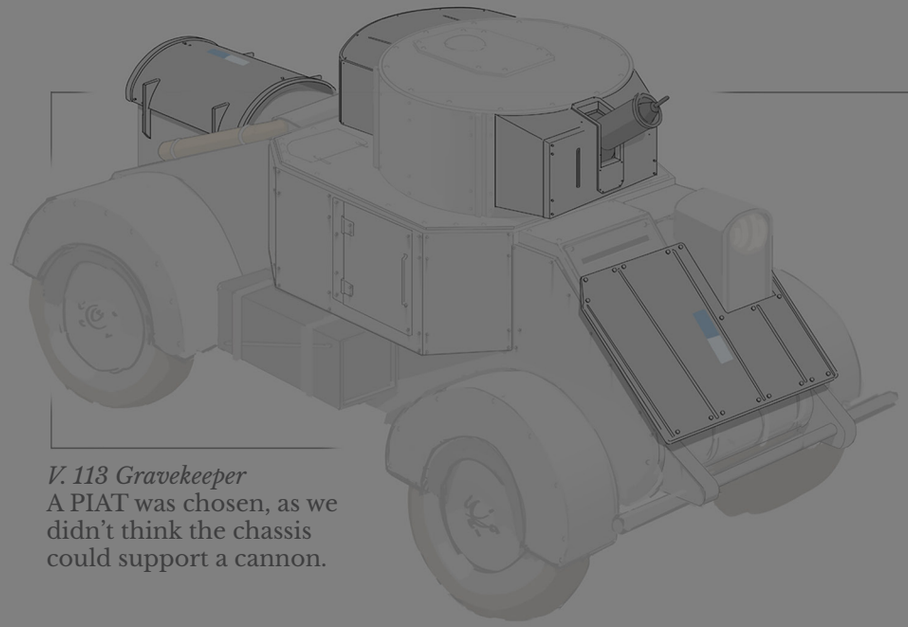

*V. 113 Gravekeeper*
A PIAT was chosen, as we didn't think the chassis could support a cannon.

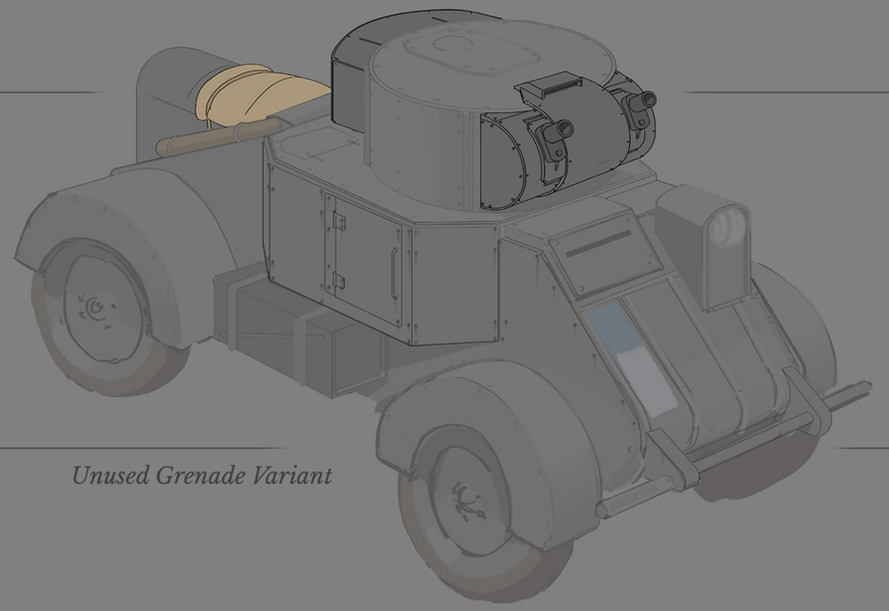

*Unused Grenade Variant*

## Vehicle Variants

As we developed and implemented the idea of vehicle variants, we established a goal that each variant would have its own lore, role and personality. Early meetings focused on the idea that a weapon and attribute change would be needed in combination. Mobility, armour, speed, unique weapons and overall combat role would all be considered. A major part of this was the idea that each different vehicle chassis would not be able to perform every role in the game. We wanted a sense of character in the vehicles and not just filling out all the options on a spread sheet.

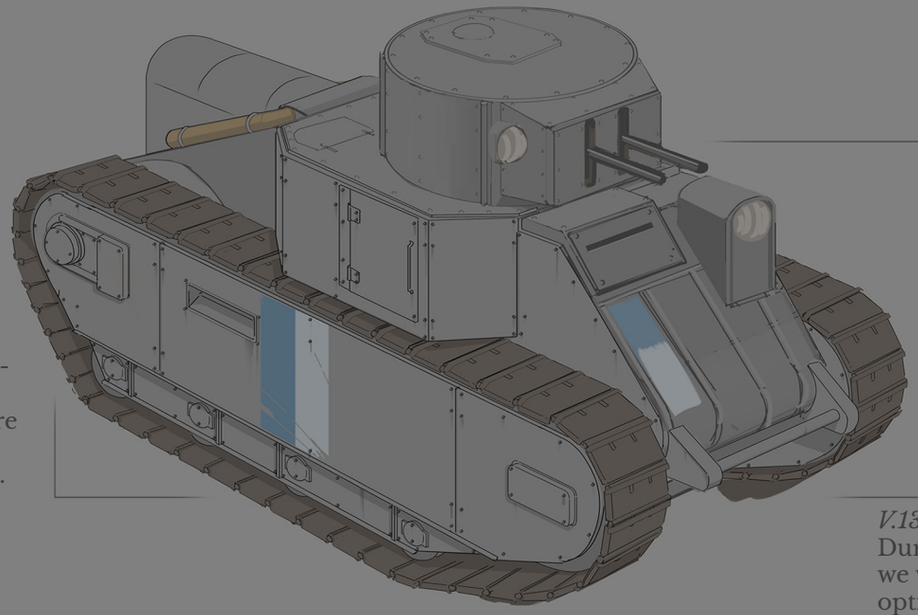

*O'Brien Highlander*
The original idea was to show how Wardens adapted their vehicles for off road use. Colonials use tire chains, but Wardens over engineered their solution.

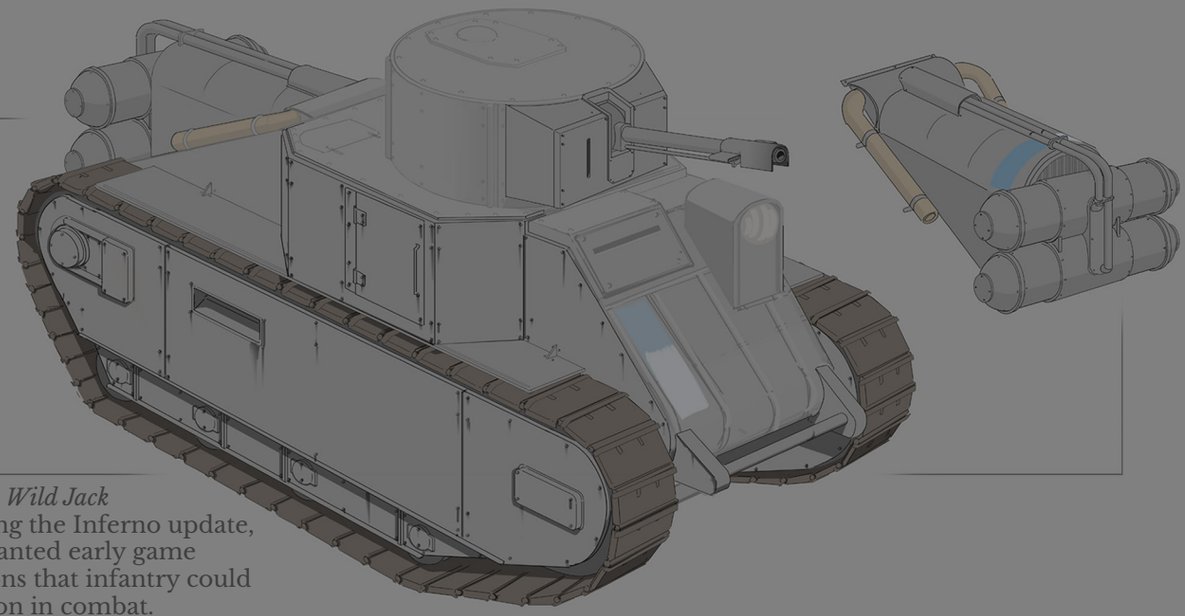

*V.130 Wild Jack*
During the Inferno update, we wanted early game options that infantry could take on in combat.

## Heavy Armoured Cars

When the heavy armoured car became a reality, I wanted to reinforce the design work of the halftrack. In-world aesthetics naturally led to the half-track's eventual design, which mirrored the look of some of the older Warden trucks, fleshing out some of the previous sketches from the base armoured car. The inspiration came from old 1910 police enforcement trucks, the idea that the Wardens had to bring an old vehicle out of retirement was a fun one. This vehicle was also the first pitch for the 30mm ammo which didn't exist at the time, and ended up with 40mm ammo instead.

*V.101 Freeman*

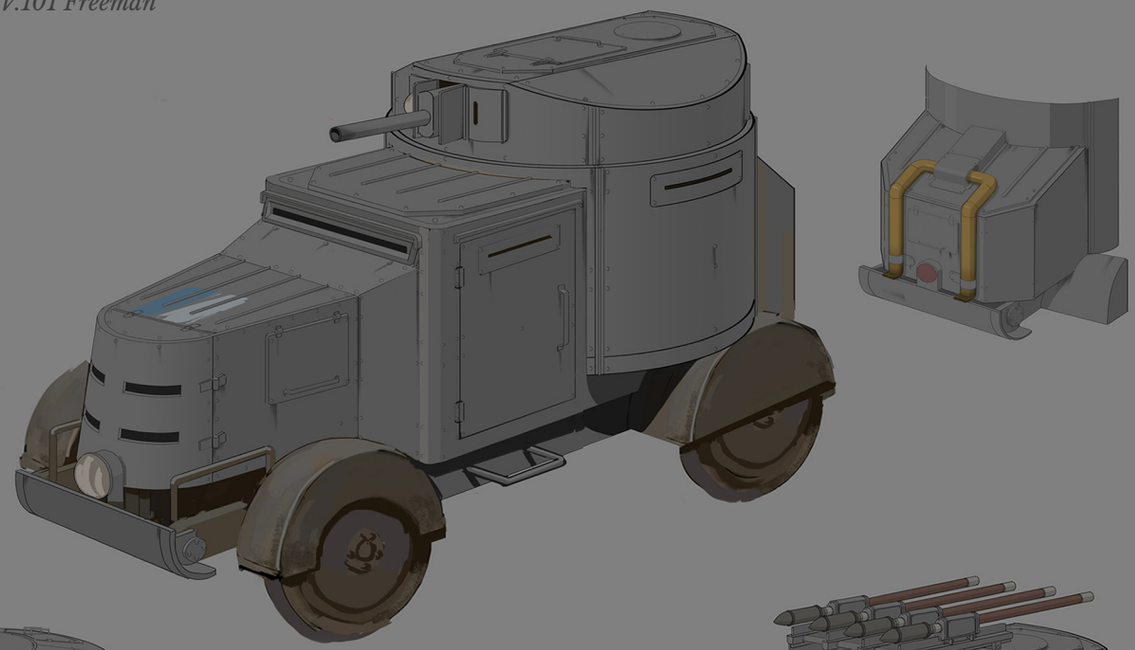



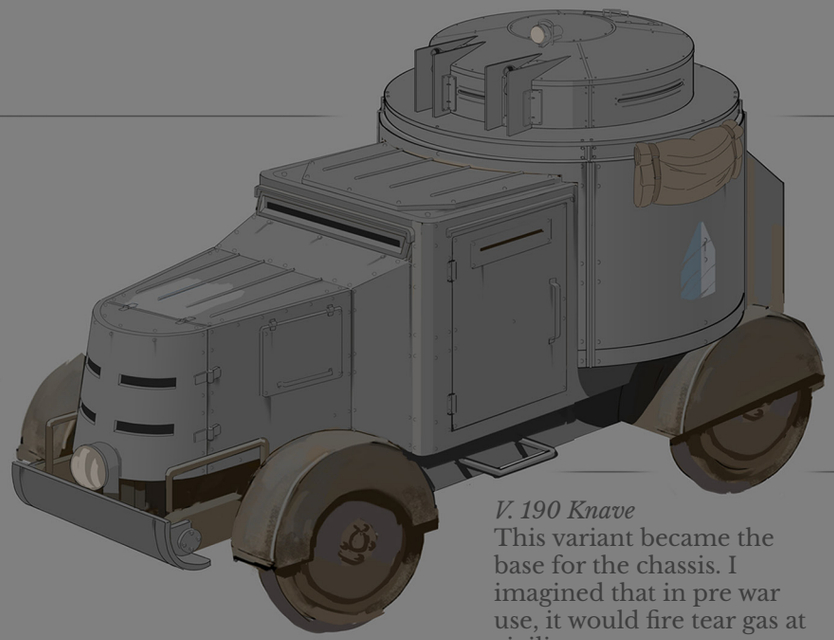

*V. 190 Knave*
This variant became the base for the chassis. I imagined that in pre war use, it would fire tear gas at civilian protestors.

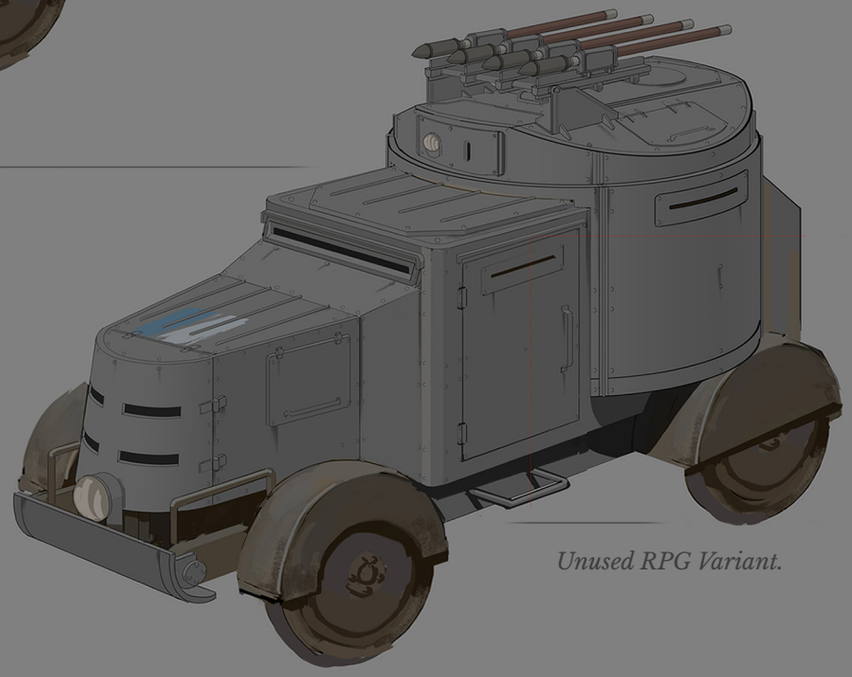

*Unused RPG Variant.*

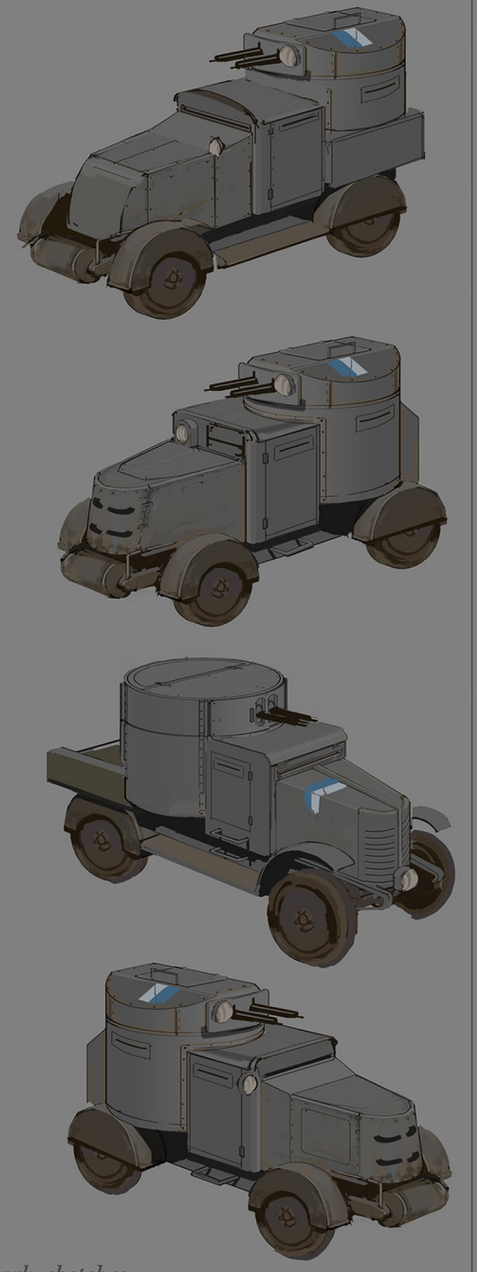

*Early sketches*

*HH-b Hoplite*

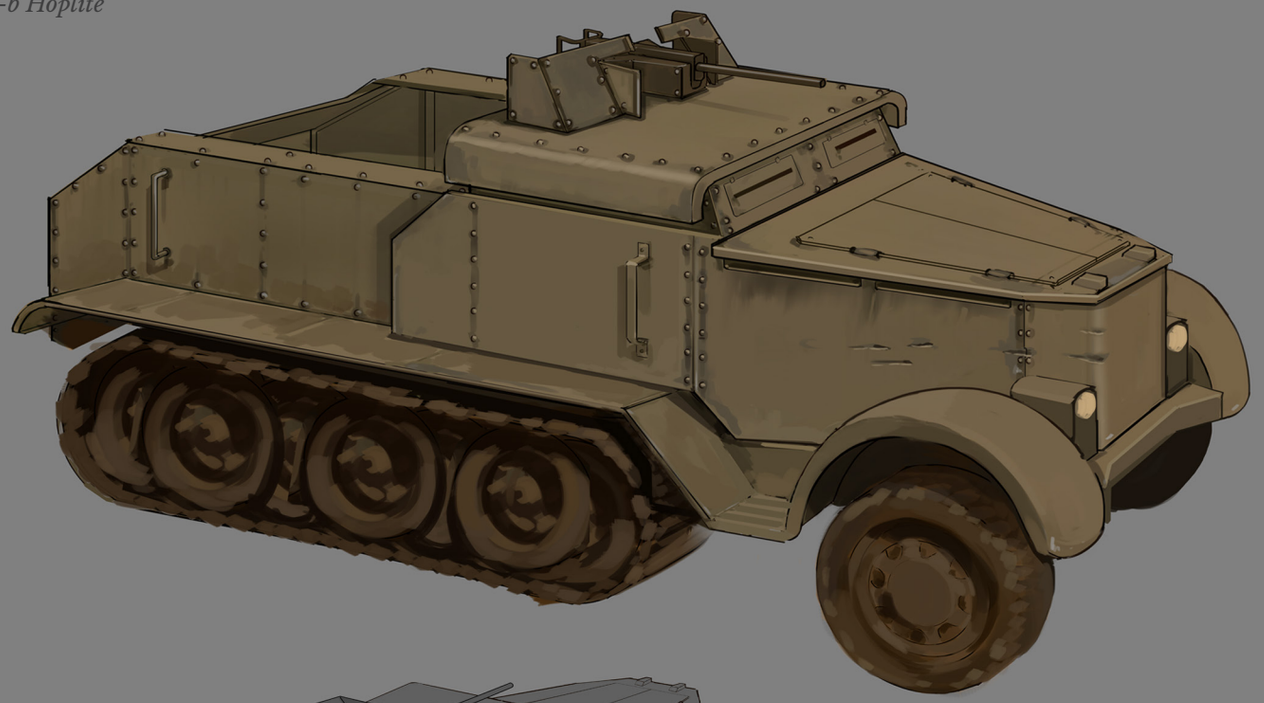

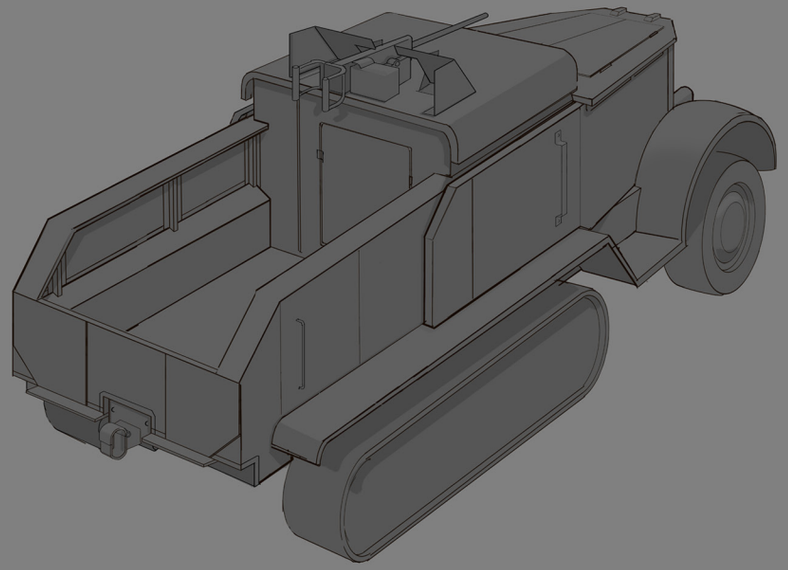

Halftracks have adapted to a few changes as the game has evolved. The addition of swappable weapons, vehicle variants and capacity to tow trailers and field weapons all became key to the personality of the vehicle. Originally envisioned as a type of APC for players, they are now seen more as the swiss army knife of the vehicle roster.

## Halftracks

One of the earlier vehicles in the game, developing the halftracks established a fundamental aesthetic rule for both factions. The idea that Colonial vehicles would feel more like pickup trucks and Wardens more like sports cars. What seemed to gain traction early for the Colonials was that their halftrack was, at its core, a pick up truck, with the thought that it was a farm vehicle before the war. This led to the idea that the Colonials don't care what their vehicles look like so long as they are effective in combat. This idea is also shown in that Colonial armour is layered and bolted on top of itself instead of finely fitted.

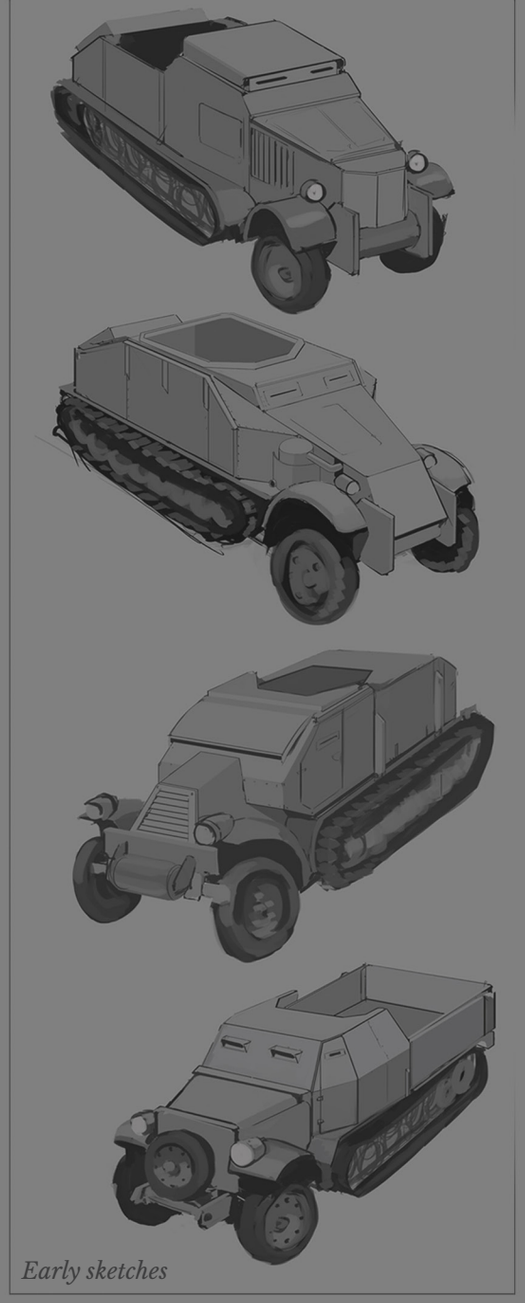

*Early sketches*

*HH-a Javelin*

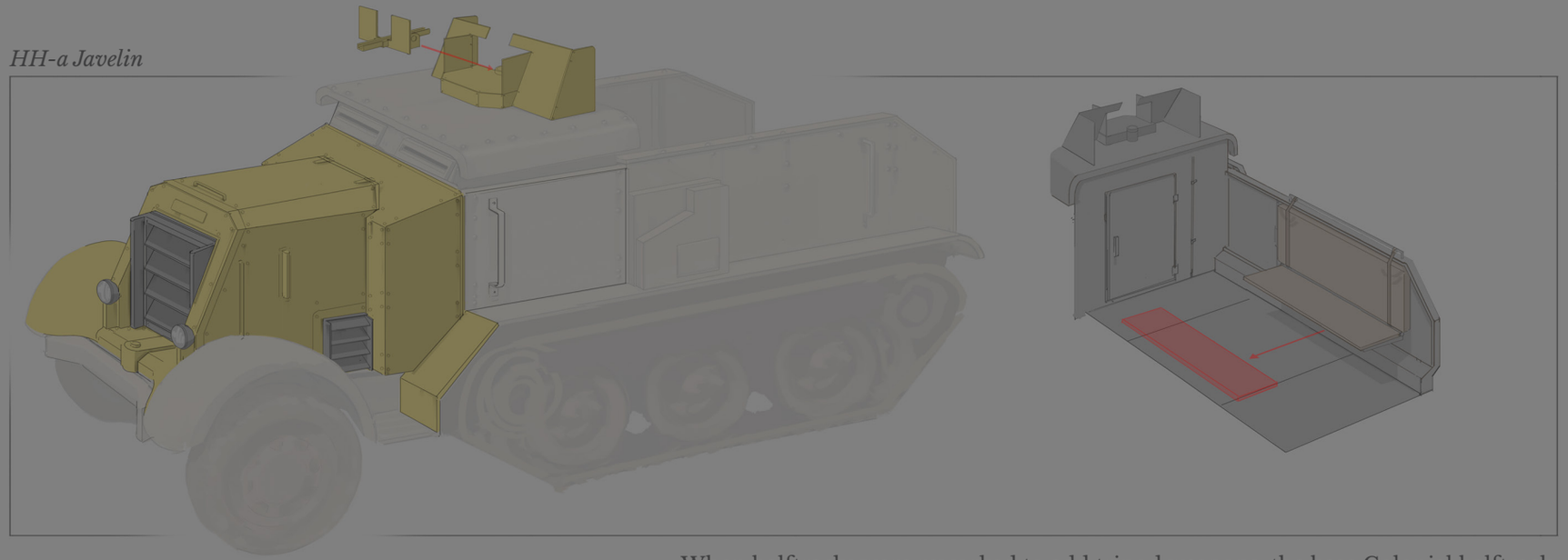

When halftracks were reworked to add tripod weapons, the base Colonial halftrack needed less health overall and the front was redesigned to look lighter.

*HH-d Peltast*

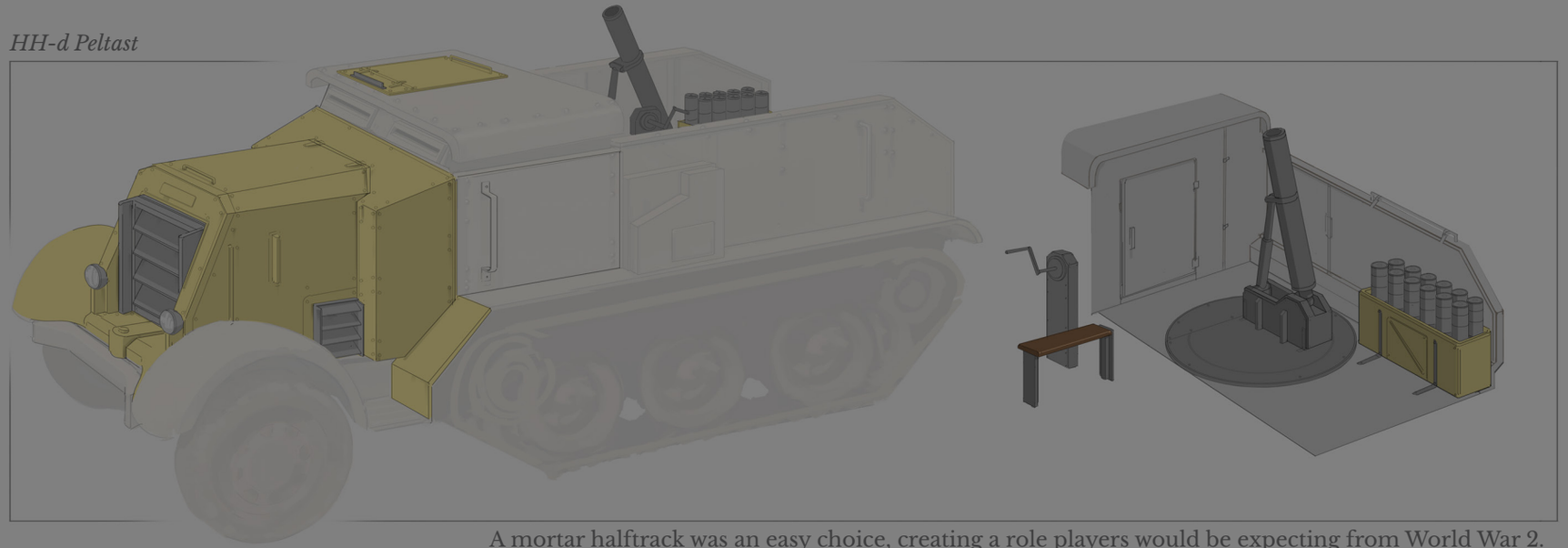

A mortar halftrack was an easy choice, creating a role players would be expecting from World War 2.

Being so early in development, a number of competing designs were considered

*Niska Mk 1*
*Motor Gun Carriage*

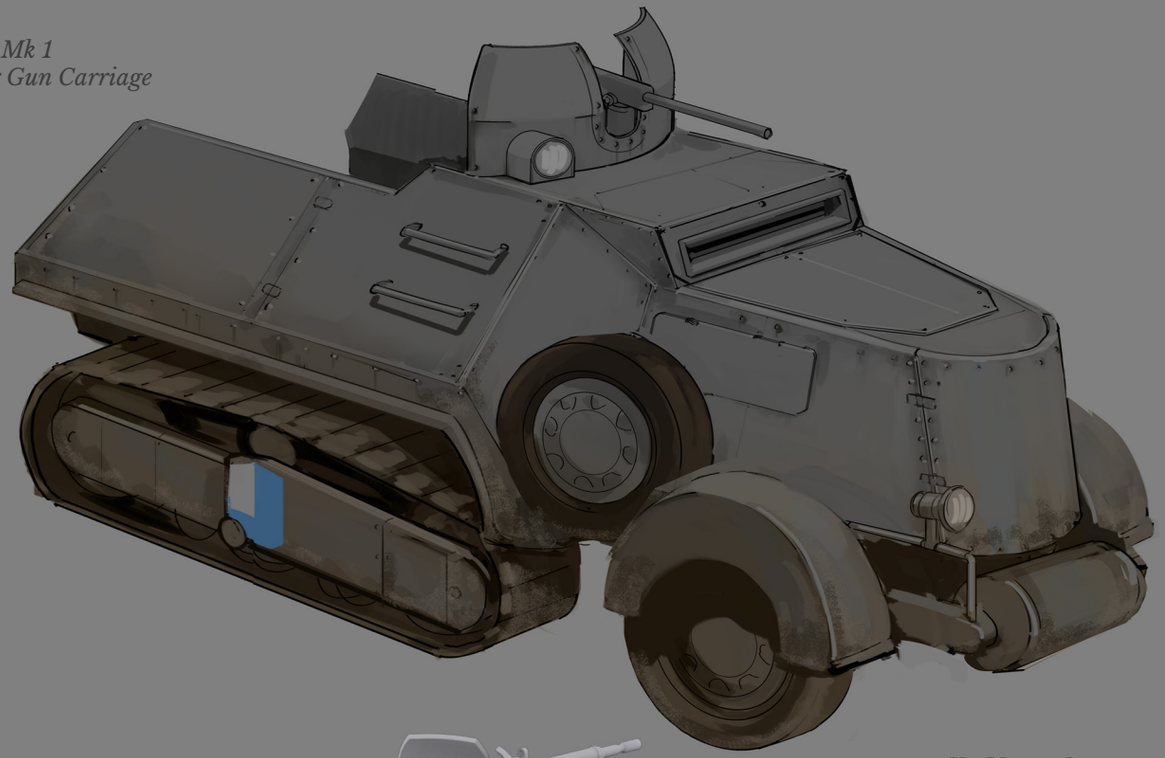

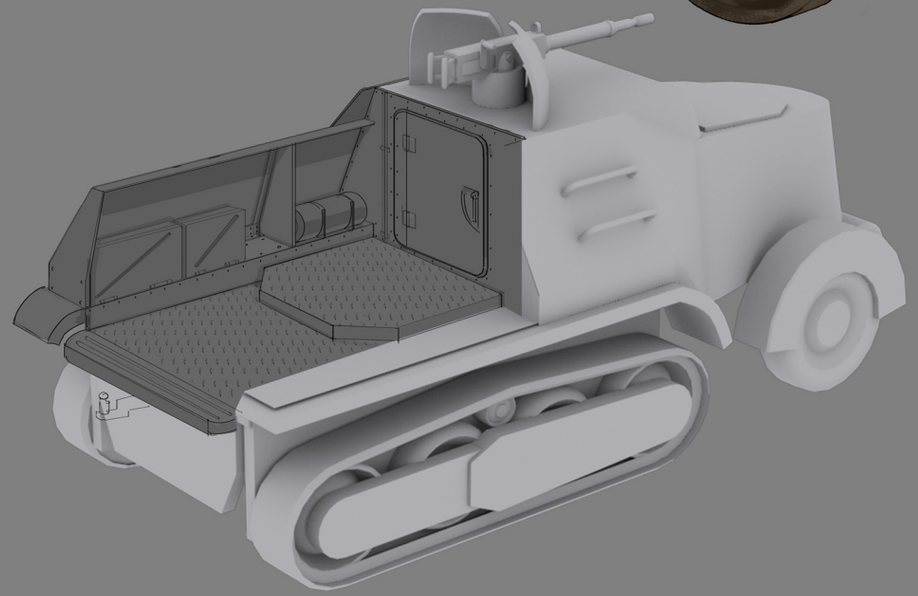

Around the time that tripods and tripod weapons were added into the game, there was a debate about adding them to a few vehicle chassis. This went against the earlier idea that every vehicle should not be able to do everything in the game. The idea that the Halftracks identity and role would be a jack of all trades won out.

## Halftracks

The Warden halftrack got mixed reactions from the team as the visuals were developed. We were onto something when one modeler said they liked it because they thought it looked like the Batmobile. I was assured it would be a hit, but Mark was unsure of it. It took some convincing to give it a try. Meanwhile, this idea that Warden vehicles look pompous and overly engineered was evolving. At this early point in the games development it felt important that the halftracks not resemble any specific real world reference, and stand out as original.

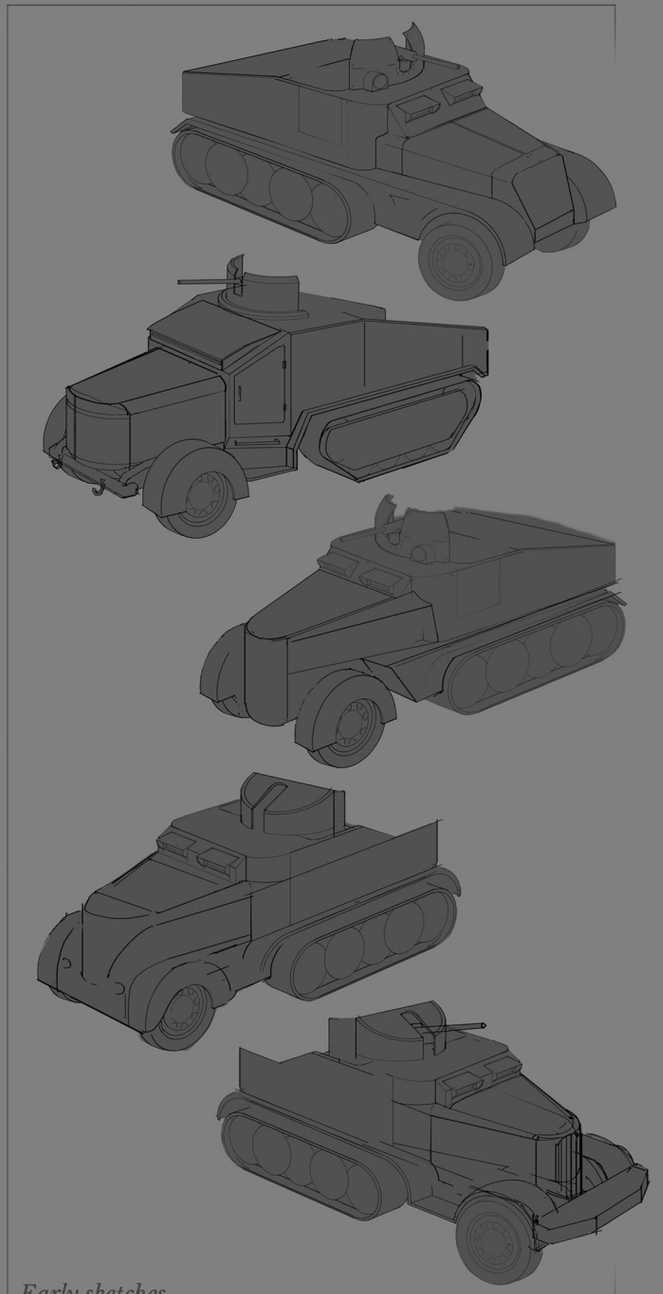

*Early sketches*

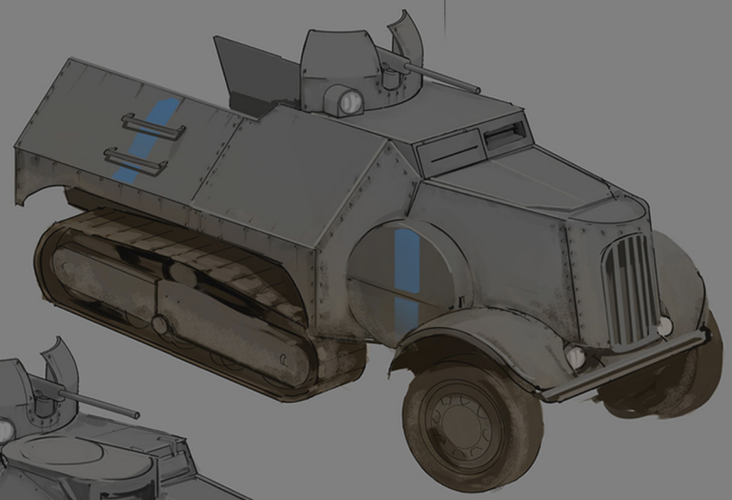

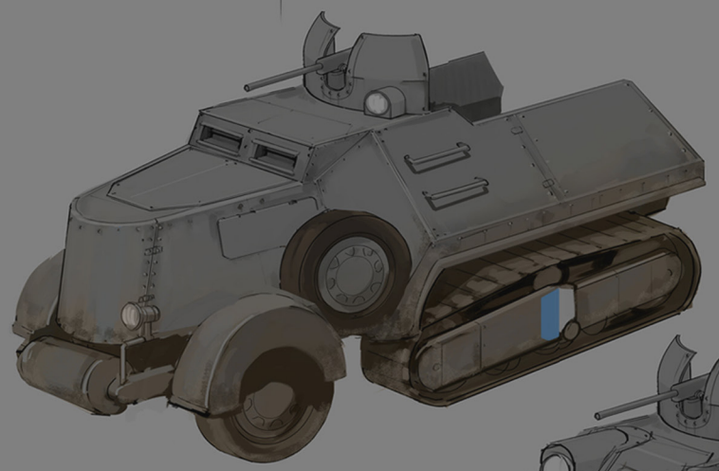

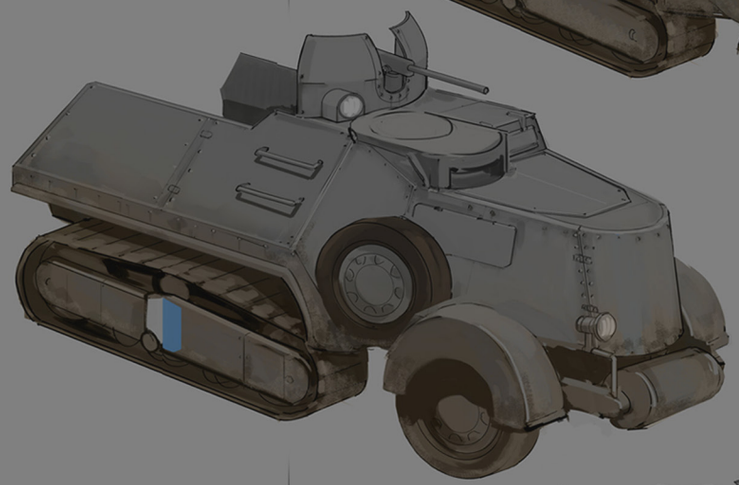

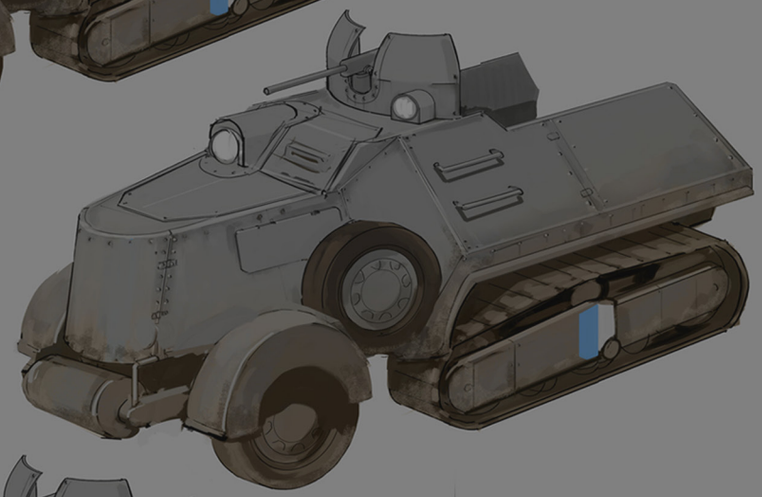

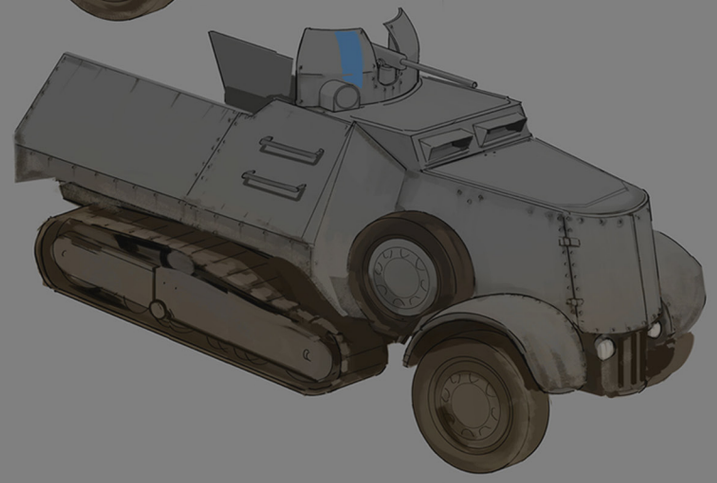

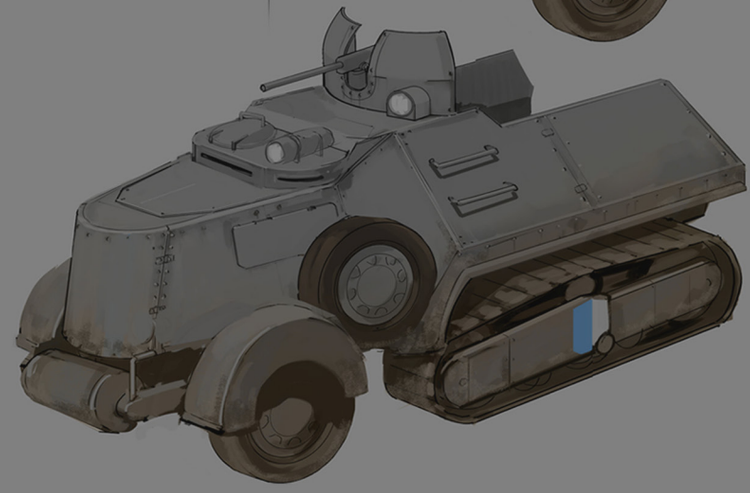

A number of ‘faces’ were designed for the Warden halftrack as part of the attempt to convince everyone on the team of the overall design.

At this point early in the life of the game the idea that Warden vehicles only have one headlight wasn’t concrete yet.

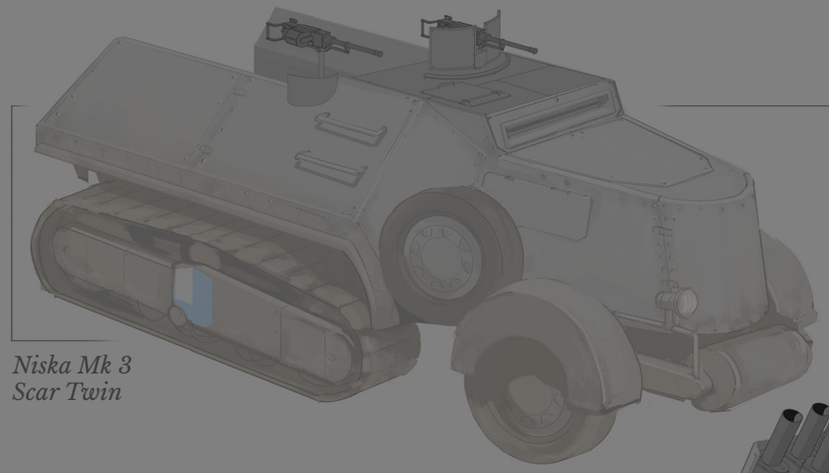

*Niska Mk 3*
*Scar Twin*

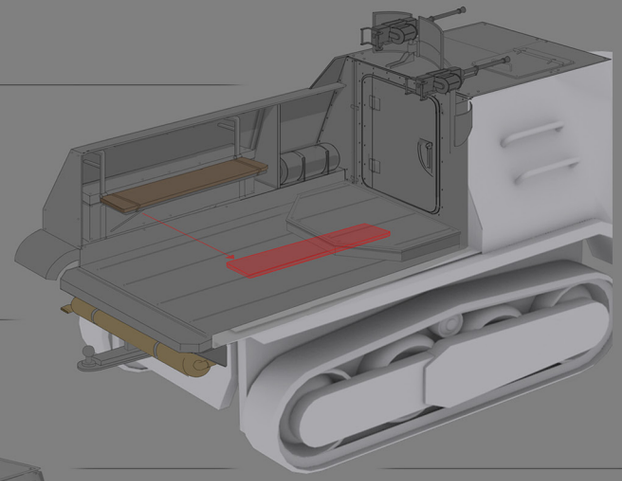

When towing was added into the game, it was decided the halftracks would each have one variant that could tow. The Wardens need an additional option to fill this slot. The twin guns on top were an attempt to try something experimental, but not overpowering.

When it came time to add in rocket artillery, the concept that Wardens would over engineer an answer was well established. The halftrack was an easy choice for chassis.

*Niska Mk 9*
*Skycaller*

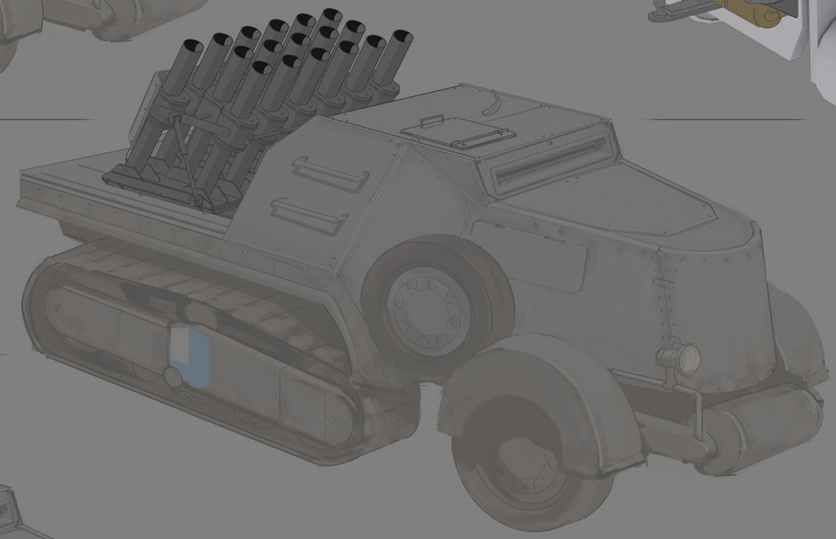

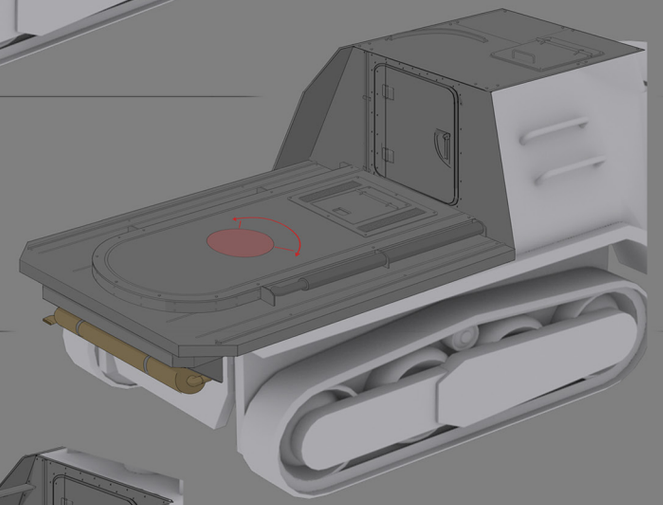

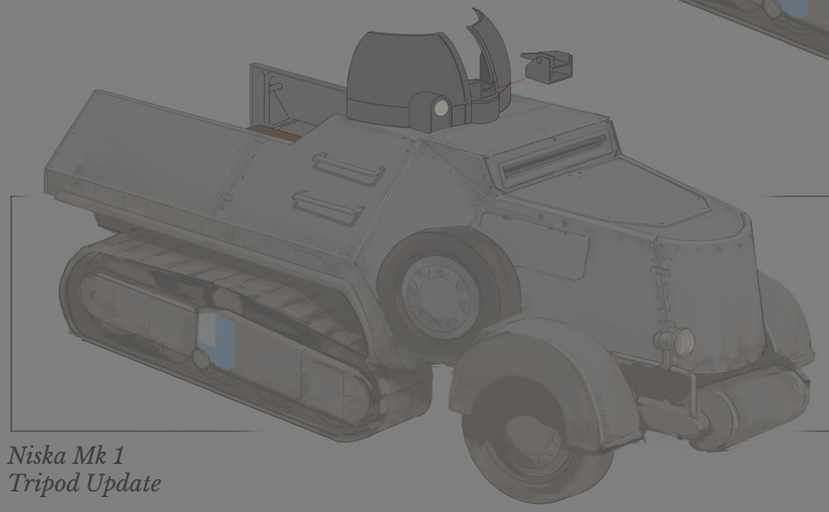

*Niska Mk 1*
*Tripod Update*

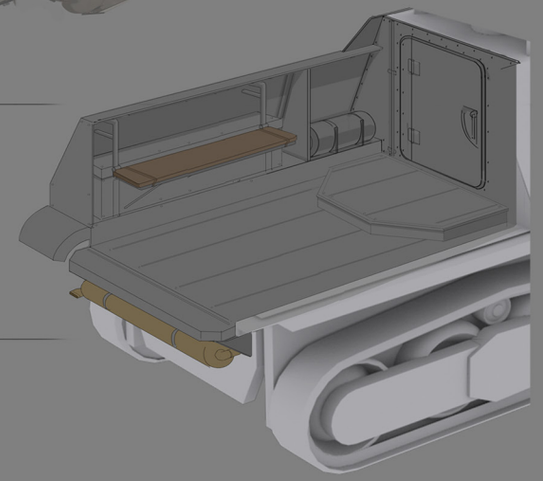

The base vehicle could not be the one that towed, and none of the existing variants could add a dedicated large gun on the back either. The Colonial's armoured halftrack was underused, and an obvious choice. We didn't want a direct copy for the Wardens, and were okay with something weaker.

*Niska Mk 2 Blinder*

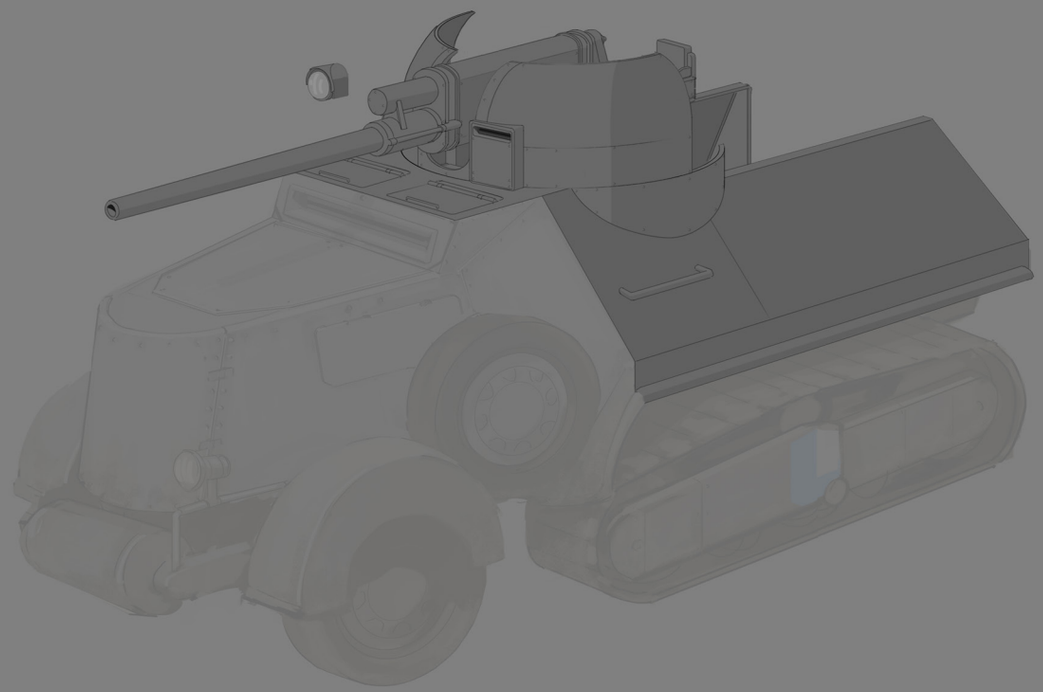

As the project evolved, more interior and weapon detail drawings were needed. The addition of the cinematic camera required us to raise the fidelity on the models.

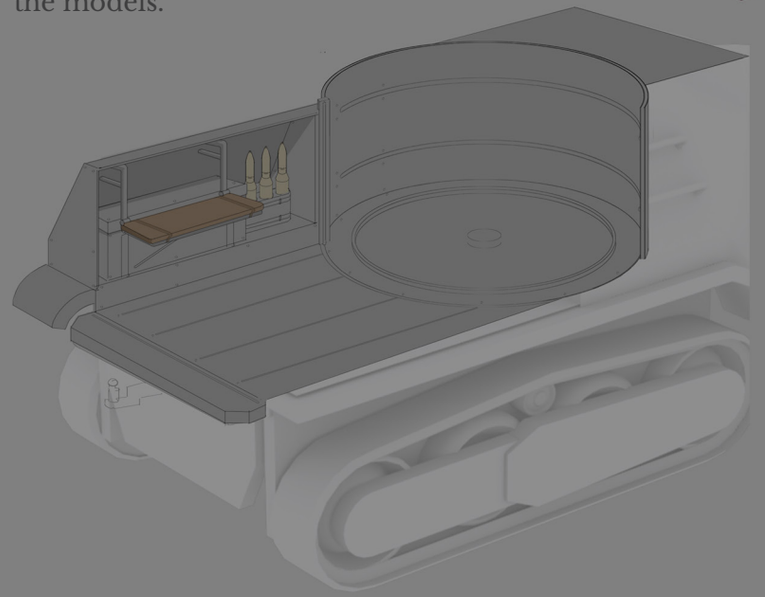

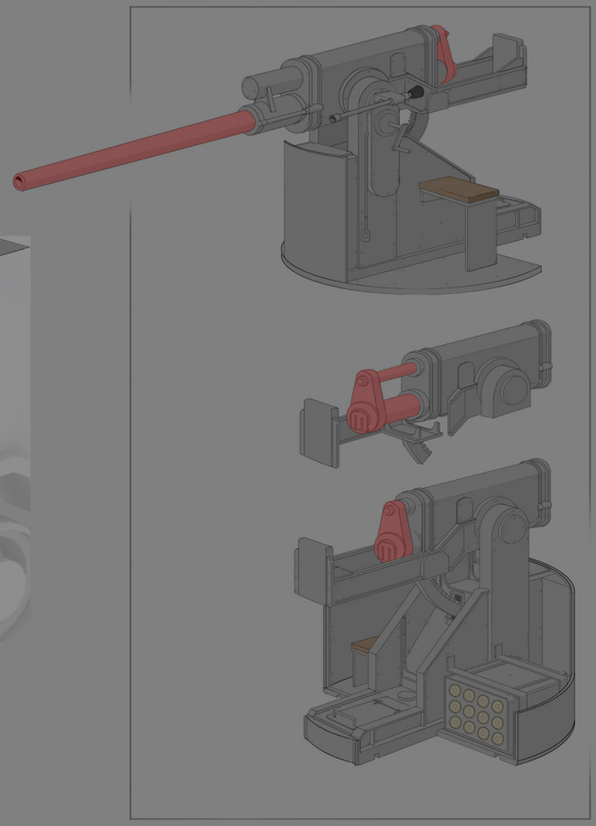

## Anti Tank Halftracks

The idea of a halftrack mounting an anti tank cannon started when faction symmetry was the goal, and options for both factions were designed. The switch in logic to asymmetrical factions delayed the feature for both sides for a while. When we came back to the feature, the Warden option was chosen. The gun mounting proved to be large enough that a giant rework to the back of the vehicle was needed.

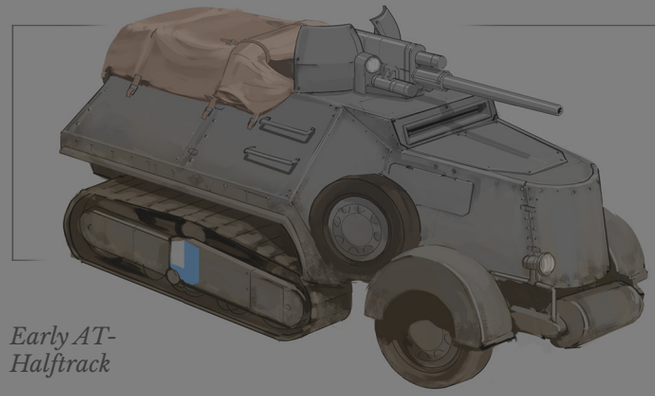

*Early AT-Halftrack*

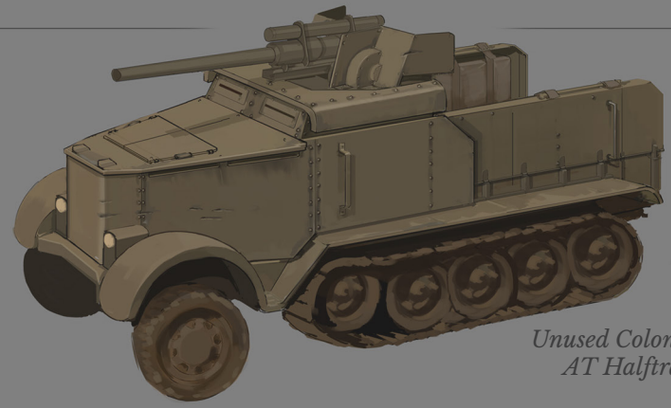

*Unused Colonial AT Halftrack*

The concept work for artillery was extremely straightforward.

Colonials would favor a mass produced look of a truck variant.

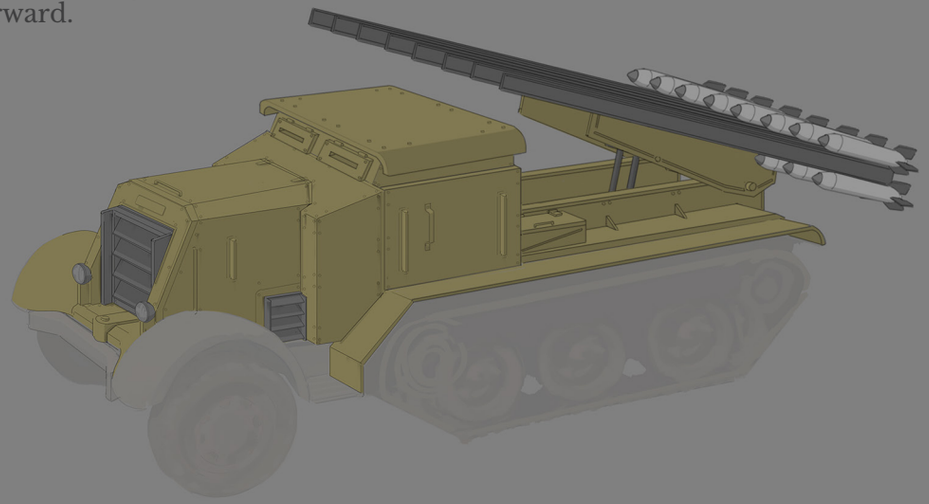

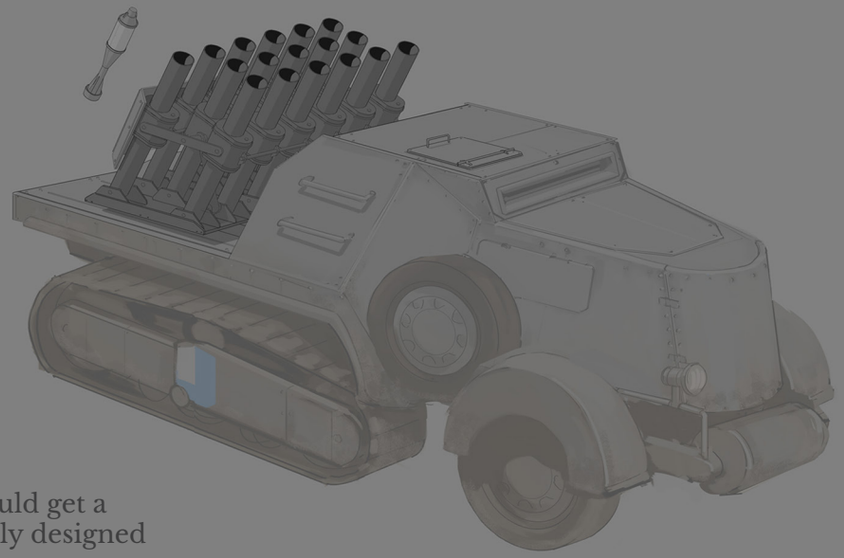

The Wardens would get a more intentionally designed halftrack.

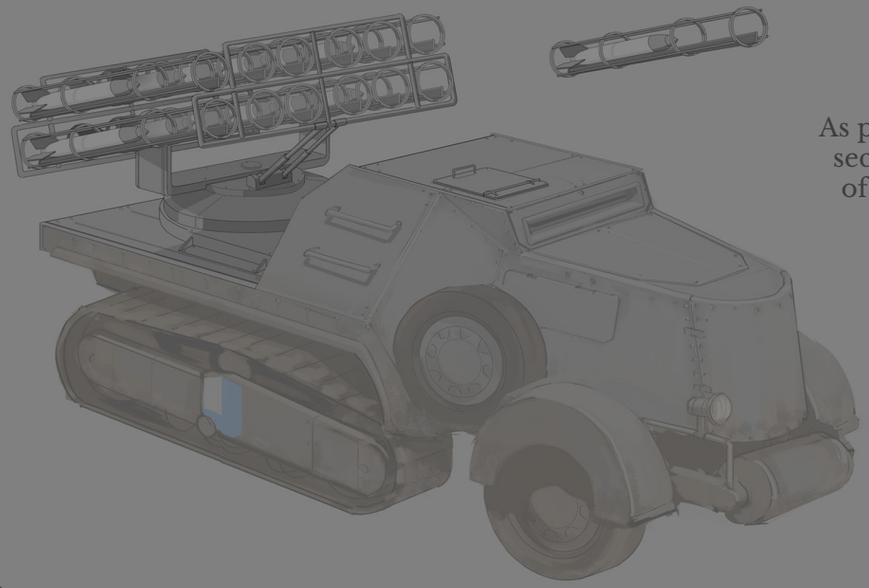

As part of the Inferno update, a second type of fire bomb style of rocket was added as a form of asymmetric content.

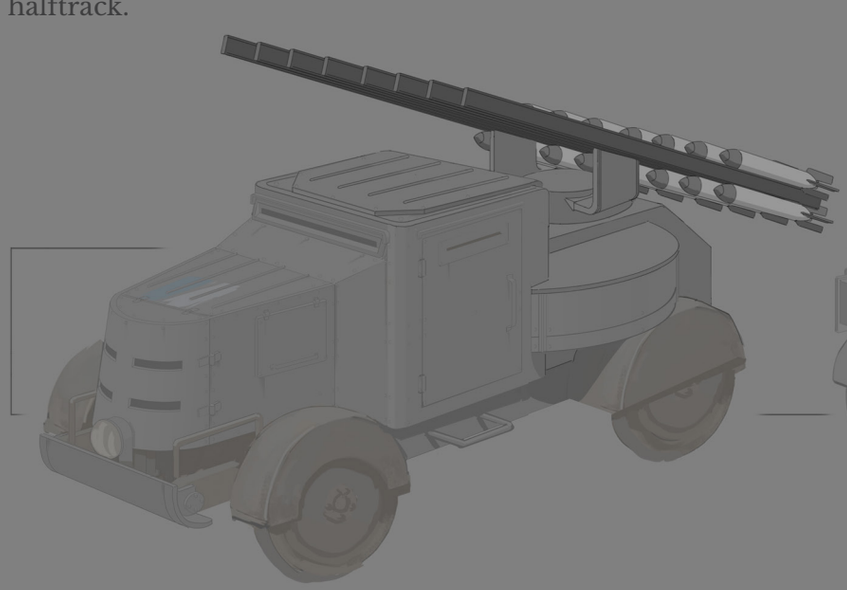

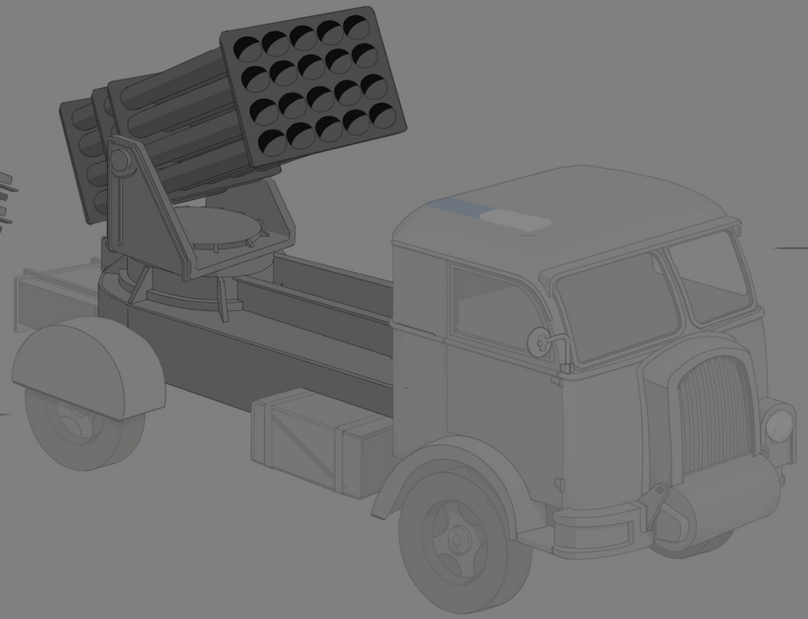

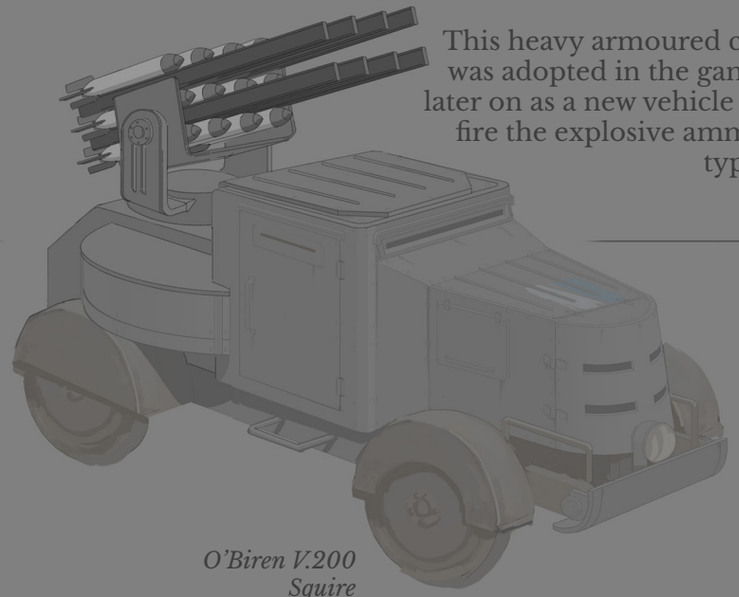

This heavy armoured car was adopted in the game later on as a new vehicle to fire the explosive ammo type.

*O'Biren V.200 Squire*

*H-5 Hatchet*

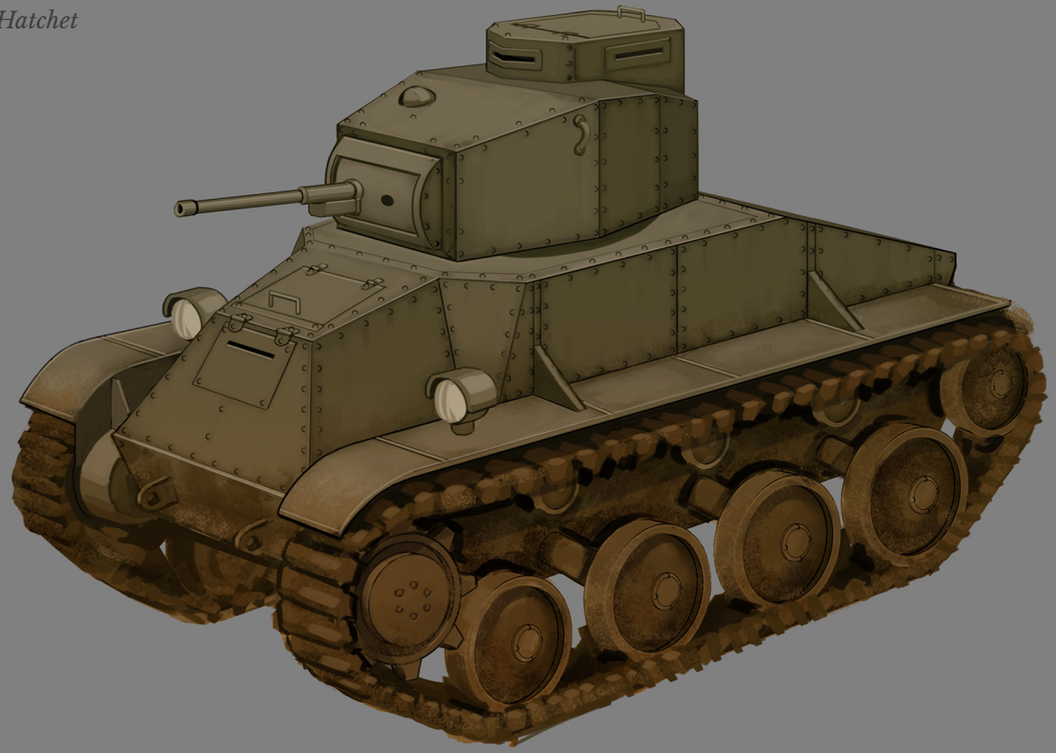

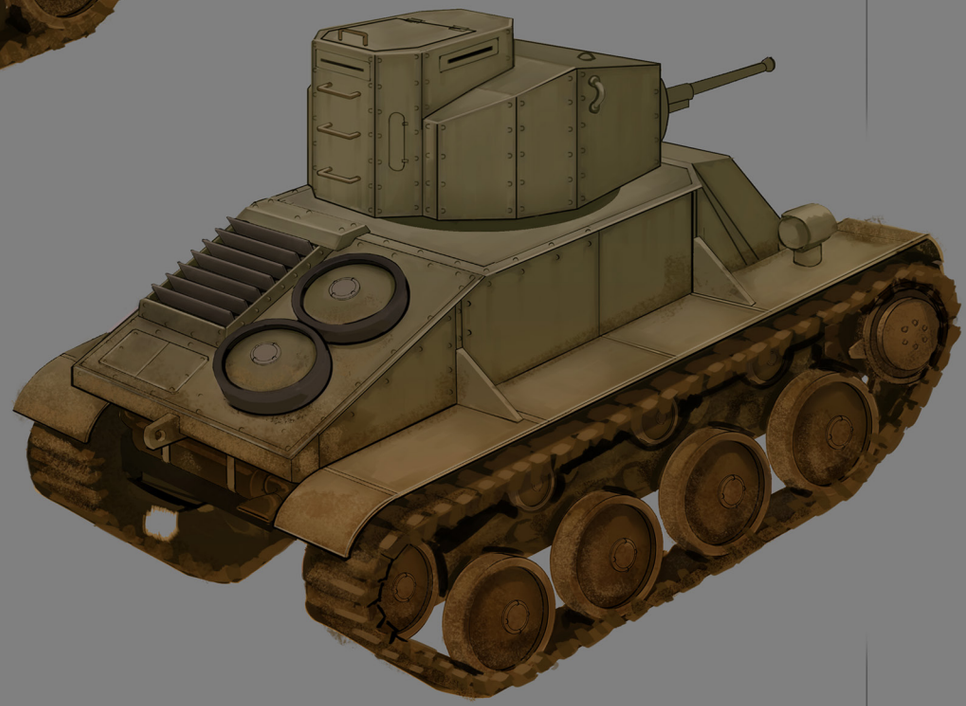

## Colonial Light Tank

A goal that was made clear when the concepting began was that the Colonials were to represent the idea that Foxhole is a World War 2 era game set in an original world, and with its own history. This was the first tank designed for the game and the challenge was to design something that would look era appropriate at a glance. Capturing the feel of the era was pivotal - Foxhole is not a dieselpunk or steampunk game but a real world with similar technology to the 1930's. The solution was to take inspiration from tanks of the 1940's and mix in construction elements of the 1920's. A lot of time was spent considering the type of armour, the style of rivets, and the overall armour plate styles.

*Exhaust designs*

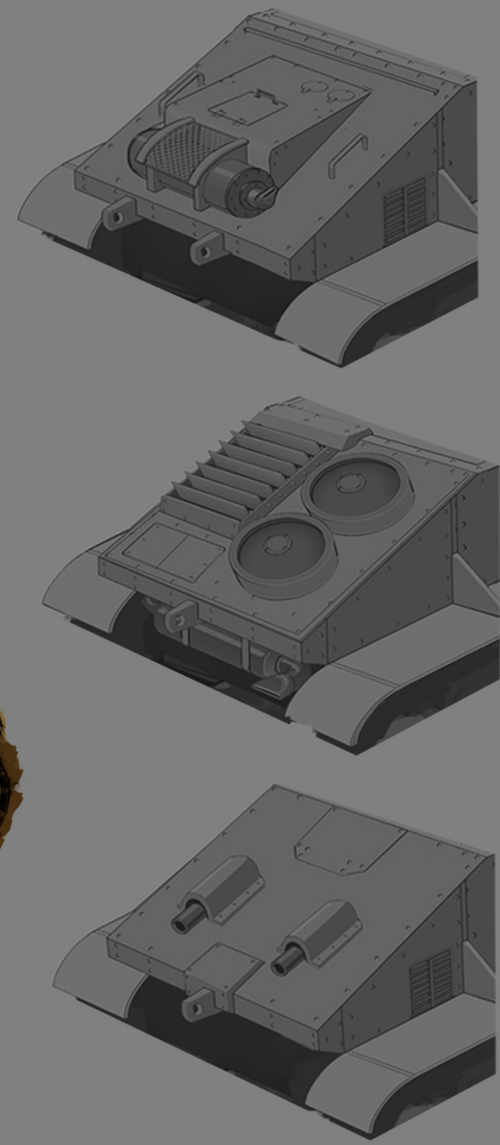

## Deisgning the first Tank

Looking back lovingly, 10 years later, these early sketches feel like they belong to a different game. At the time we didn't know the success the game would have, or the expansive roster of vehicles we would be designing.

In the beginning the tanks would act like characters, the face of the factions. The Colonials ultimately took on the look closer to the allies of World War 2 but early inspiration was drawn from all tanks of the 1900's. The A25 Hopkins inspired the sketch that led to the final design.

The early pitch for the game was an endless war where people didn't get smarter but armour and weapons got bigger. There was an idea that the scale of tanks might be bigger, and a light tank might look closer to a medium or heavier tank. That idea was dropped eventually but it inspired some early sketches.

*Early tank concepts*

Colonial tanks almost ended up with the Warden grey colour scheme.

*Early colour exploration*

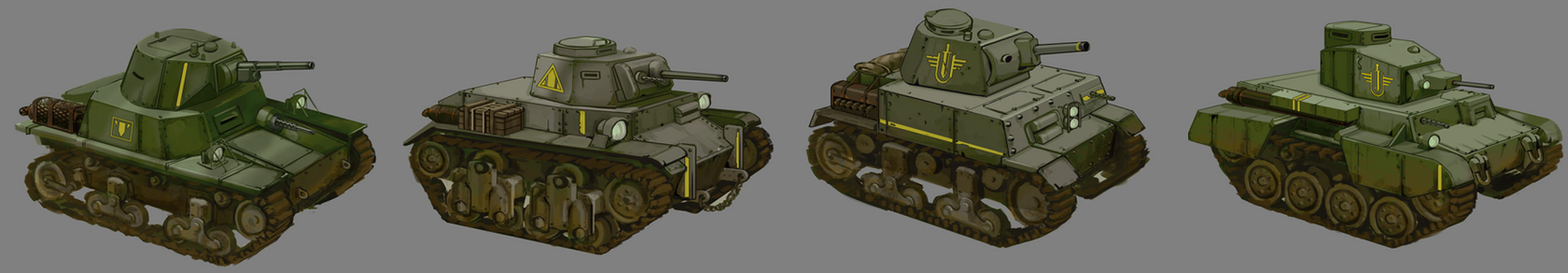

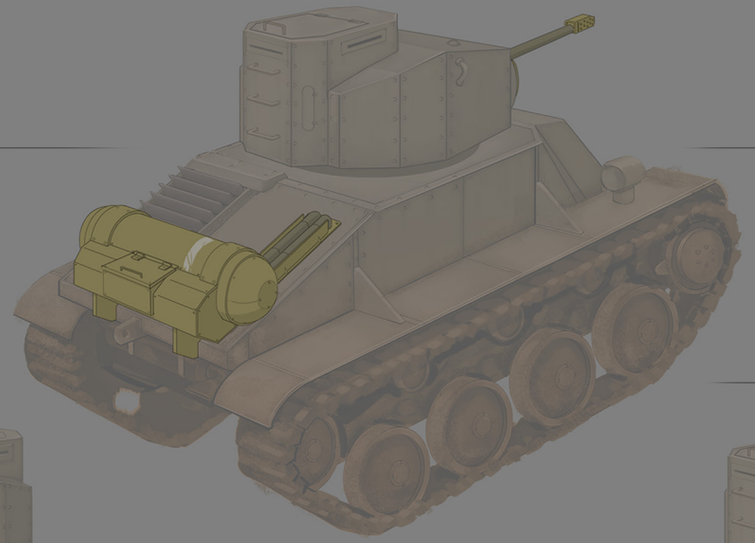

*H-19 Vulcan*
In the Inferno update, the Colonial light tank was the perfect chassis for a fast moving, light flamethrower tank.

*H-8 Kranesca*
When the idea of what a vehicle variant would even mean, the Kranesca was originally pitched as a more heavily armored and slower tank that could boost its speed to compensate at the cost of fuel. There was a push for ideas beyond just a turret swap.

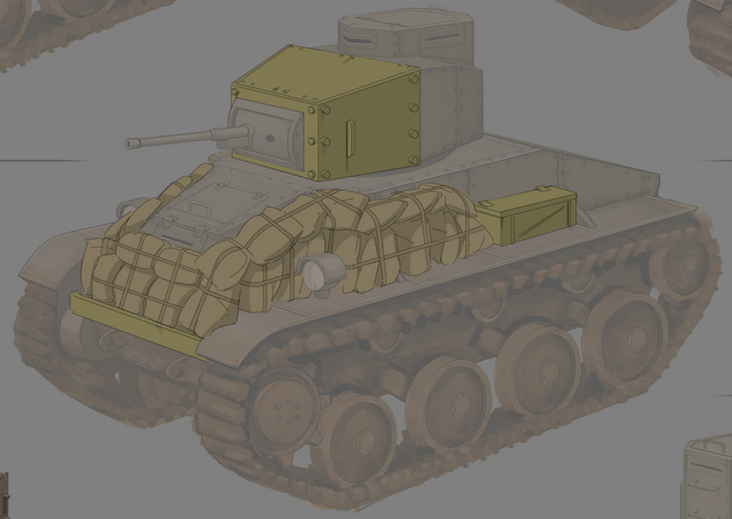

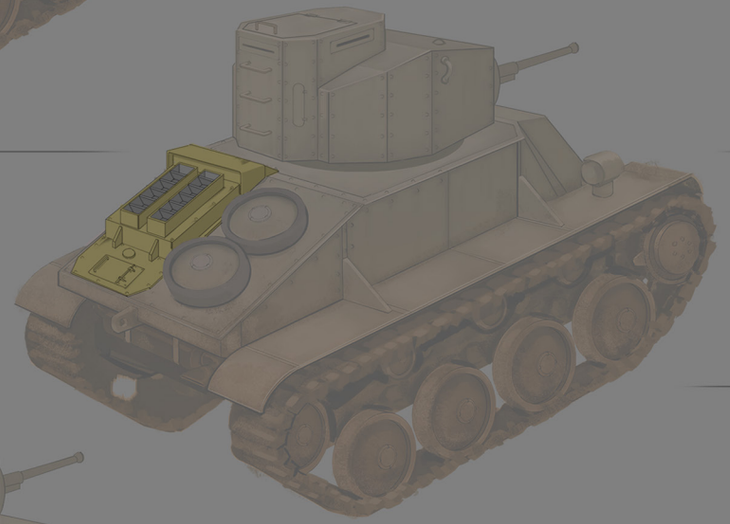

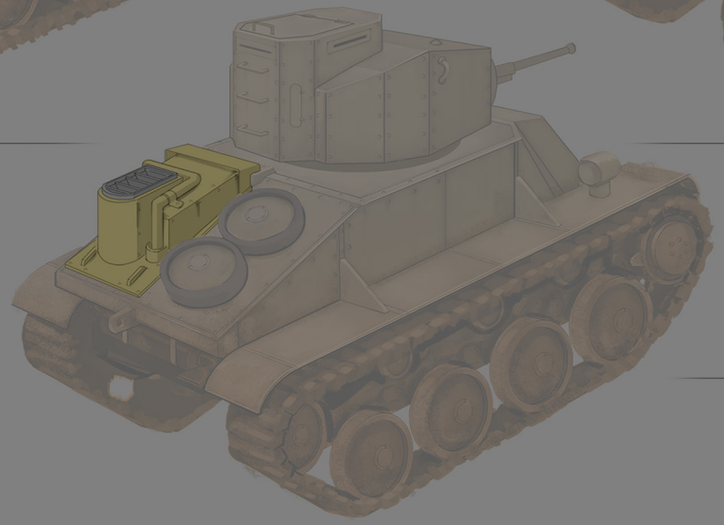

An alternate design for an armoured light tank. Throughout the production of the game a number of spaced armoured variants were pitched but never favored.

## Light Tank Destroyer

The design of the Pelekys came about in the early stages of exploring faction asymmetry; it was chosen as a replacement for a Colonial AT half-track. Visually, it was a fun exploration of how far we could push an existing chassis. A debate was had if the tank should actually drive backwards in game. Additionally, a few people on the team really like open topped tank designs, especially in a game all about team work.

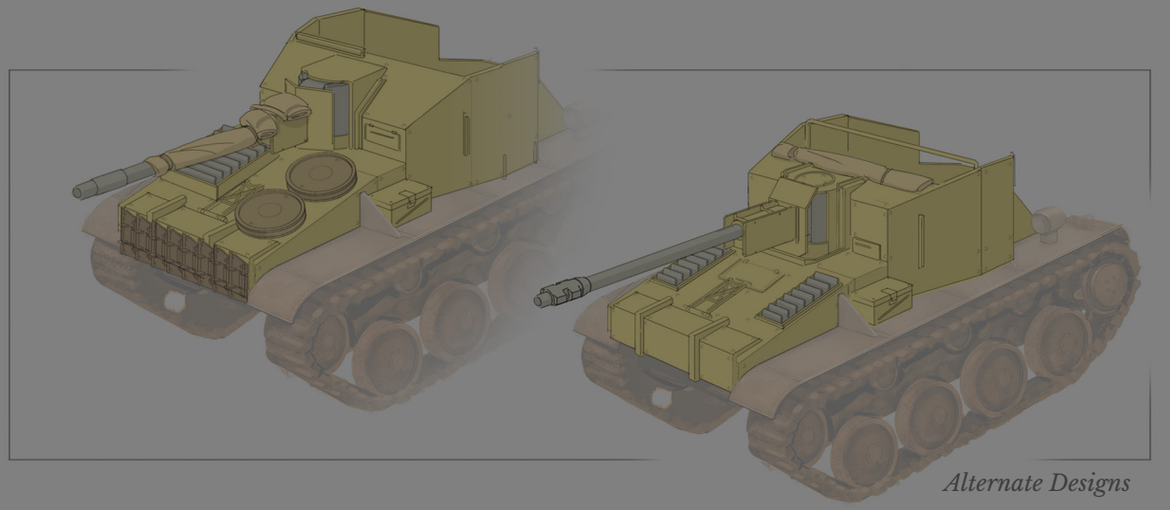

*Alternate Designs*

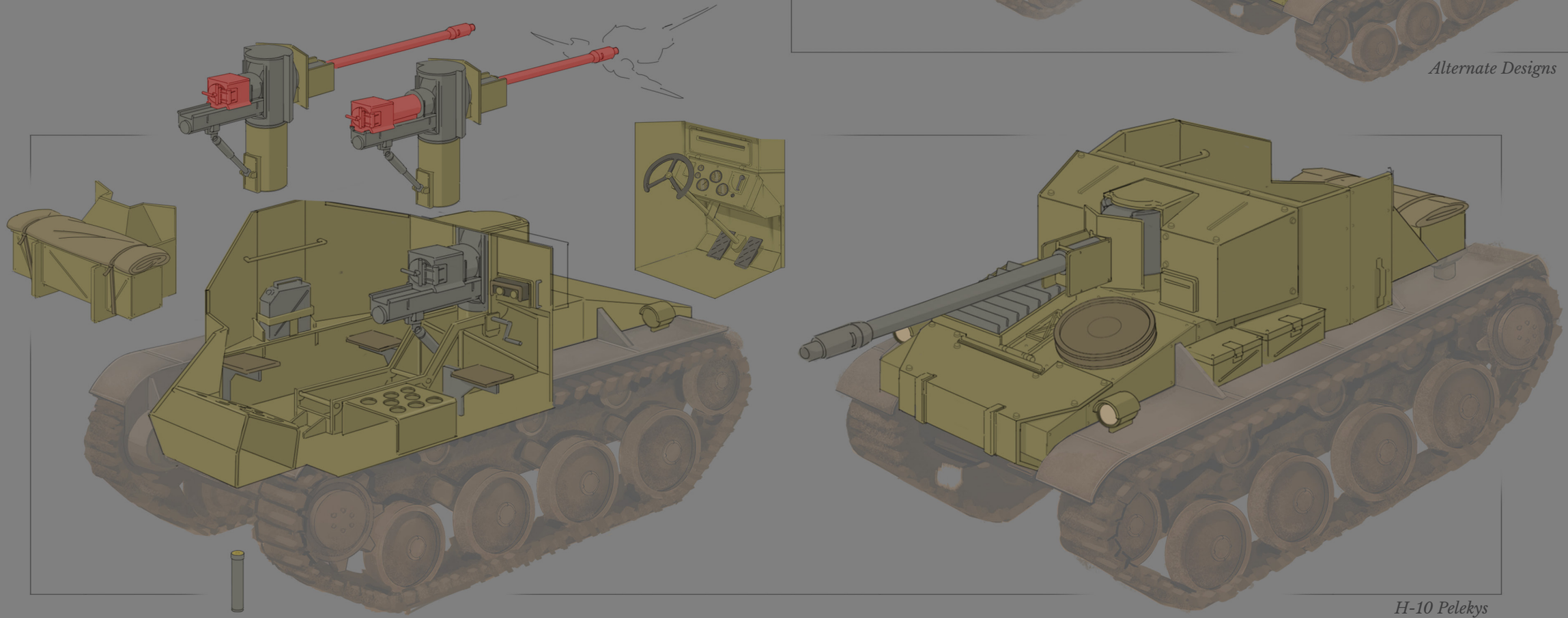

*H-10 Pelekys*

*Devitt MK. III*

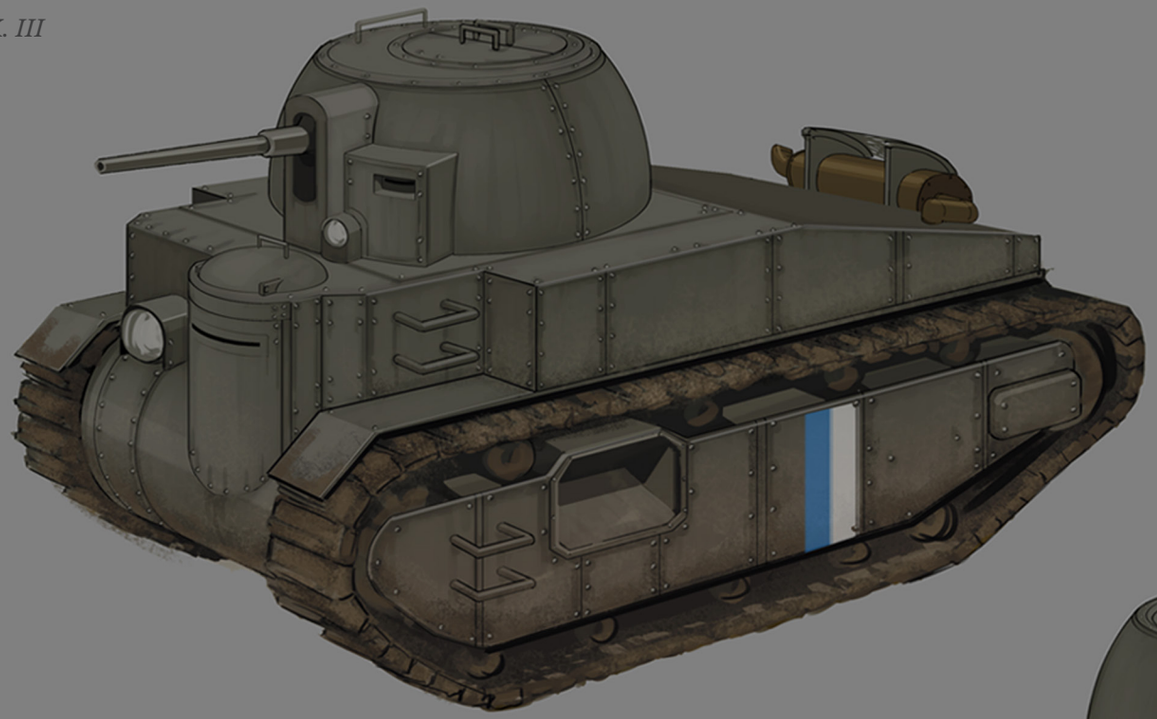

It has been asked a few times what the large opening on the side armour is. This element of the design came from referencing a British prototype test tank with an added escape hatch. The shape language was interesting, and it was adapted to the Light tank design.

In the concept, the tank has more running wheels for the tread. To save resources, at the beginning of the project the wheels from the Colonial tank were reused. The model has four large internal wheels, which is technically incorrect. Additionally, early on the tank models also didn't have bottoms to save on poly count.

*Exhaust designs*

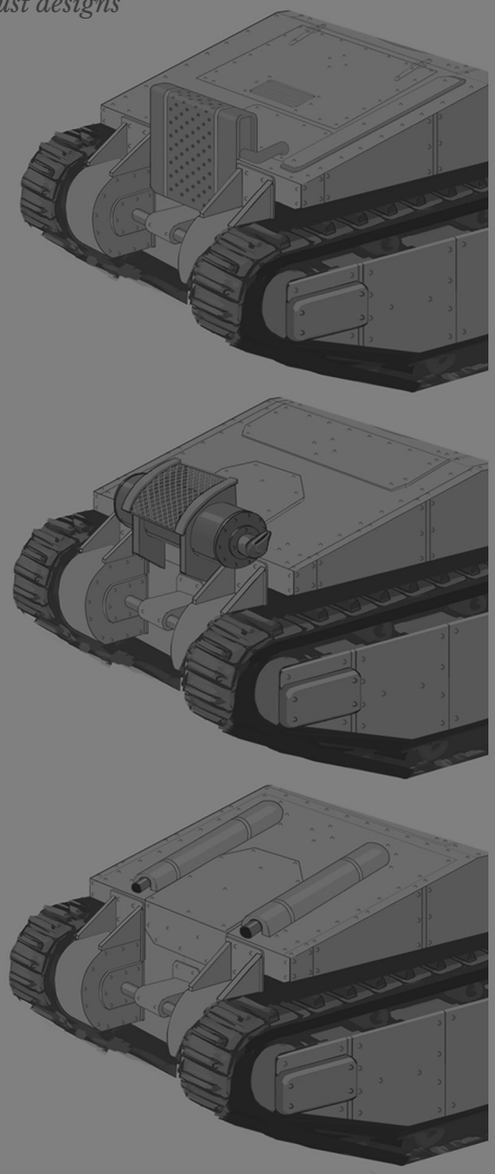

## Warden Light Tank

The second major design of the game is the Warden Light Tank. A major breakthrough for the tank design was the idea that Wardens see their vehicles with pride. A Warden soldier looks upon one of their tanks with cultural reverence. To Wardens, their vehicles are art, which is subjective but they think it's true. This narrative led to a 'pompous' look to the tank with a prominent forward positioned round turret, cylindrical front end and pronounced exhaust. The side armour over the drive wheels was chosen to help distinguish the two factions at a glance, with the Colonial having exposed wheels.

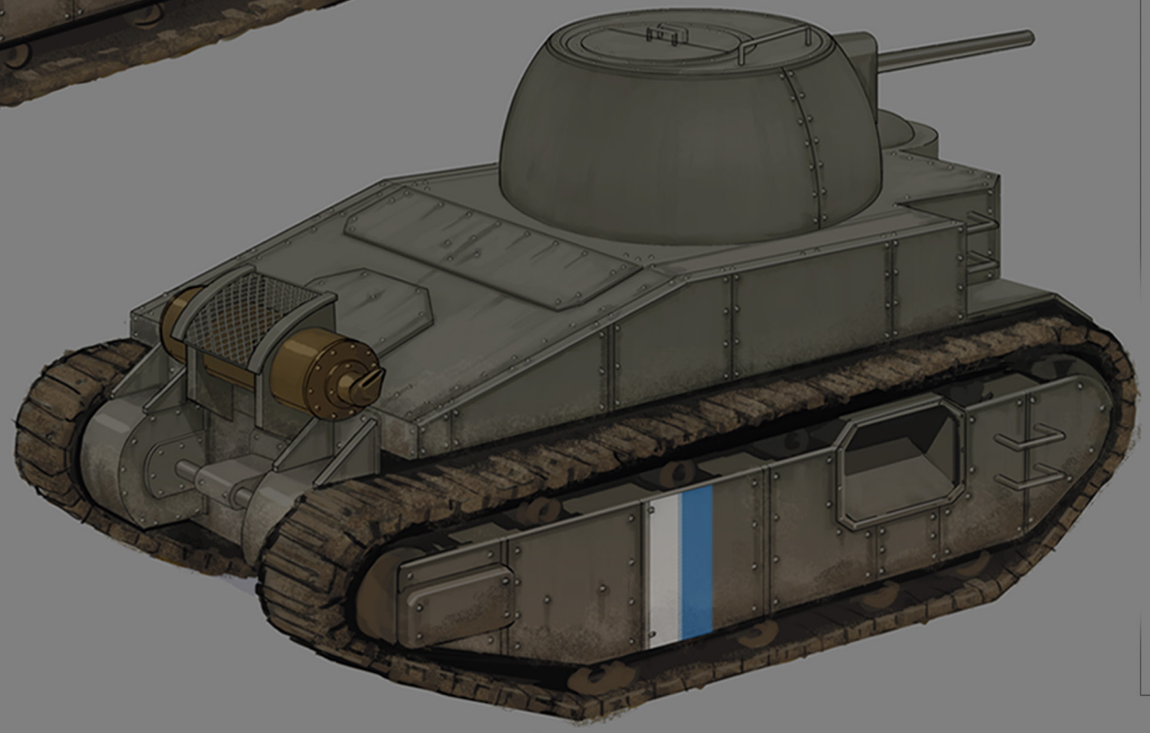

A design philosophy I have enjoyed throughout the project is the idea that, in the games' world, the tank designers of both factions were not perfect and could themselves create a bad, un-optimal design. This logic felt real to me. It would add character to the designs, and the game as a whole. Imperfection was embraced. - Julian.

The idea of a war that never stopped escalating and tanks are all larger than they would otherwise be was still being explored with a lot of the light tank sketches looking closer to medium tanks. Thematically, Warden tanks took on an older look than Colonial tanks; this was to sell the time period as some time equal to the 1930s interwar era.

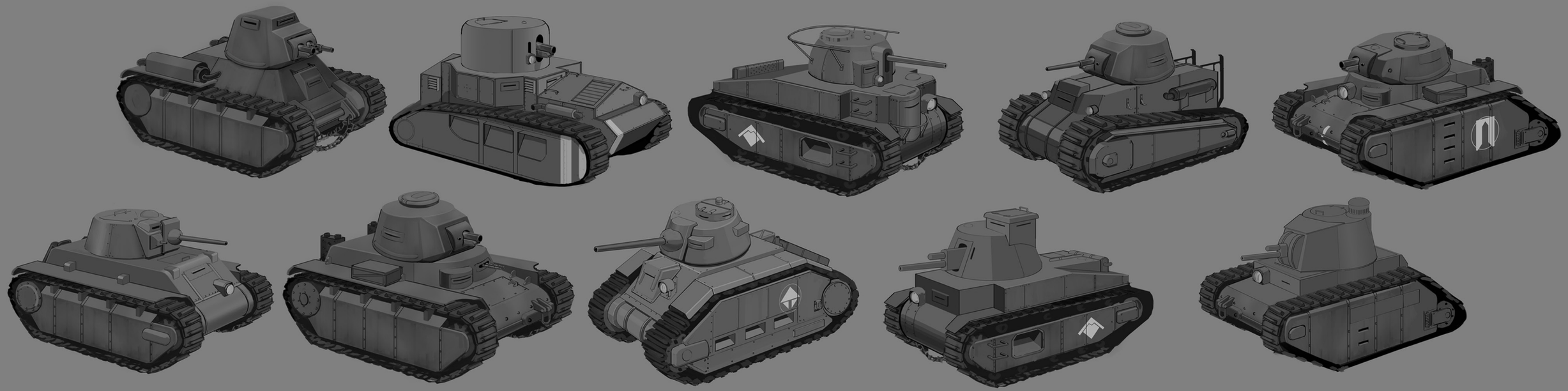

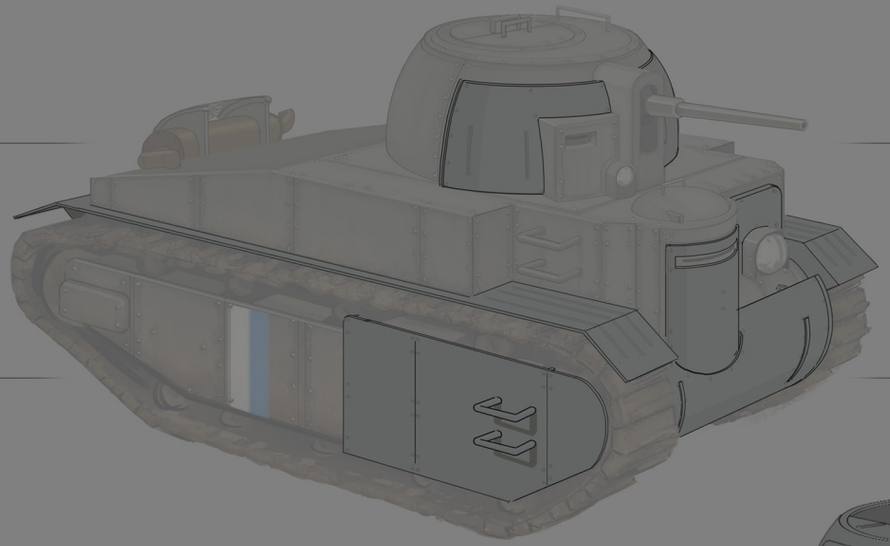

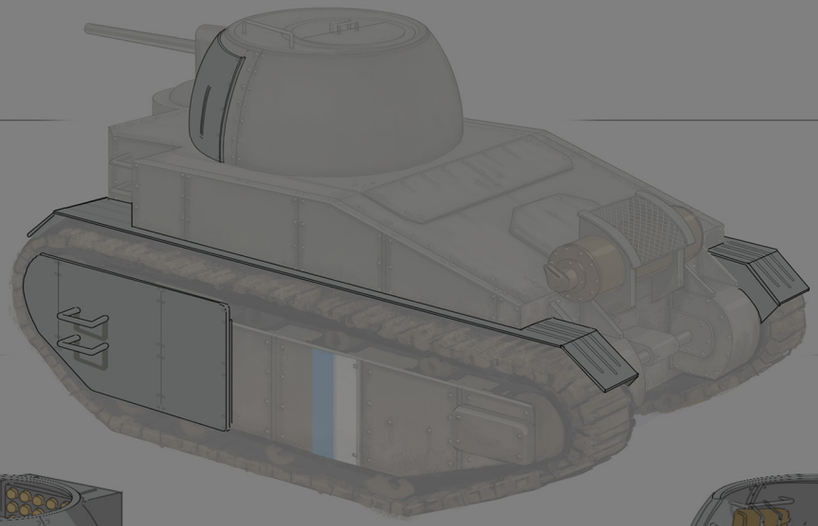

*Devitt Ironhide MK. IV*

*Devitt Caine M. IV*

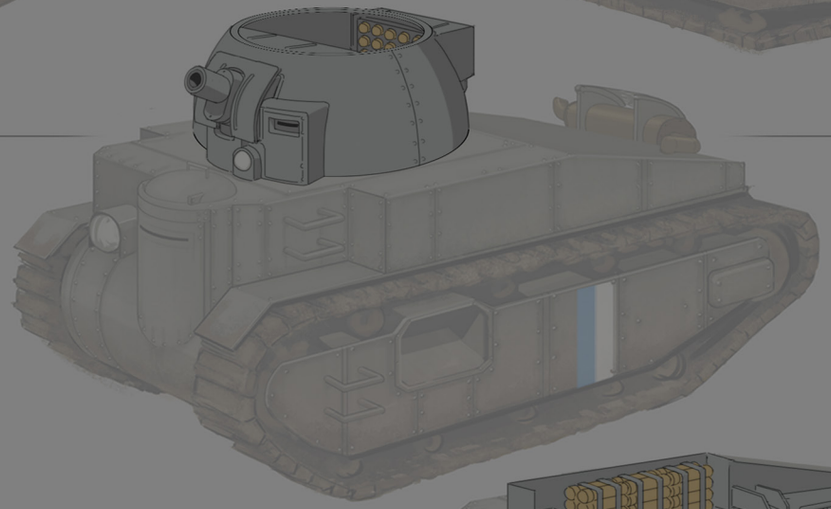

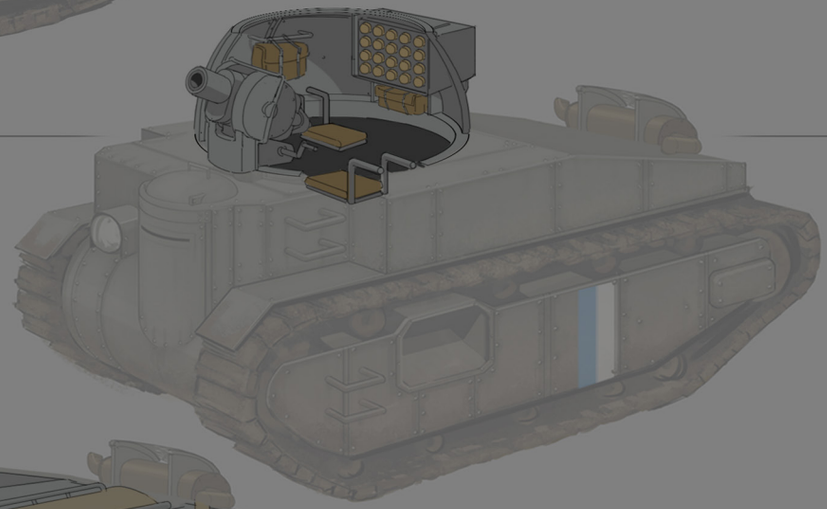

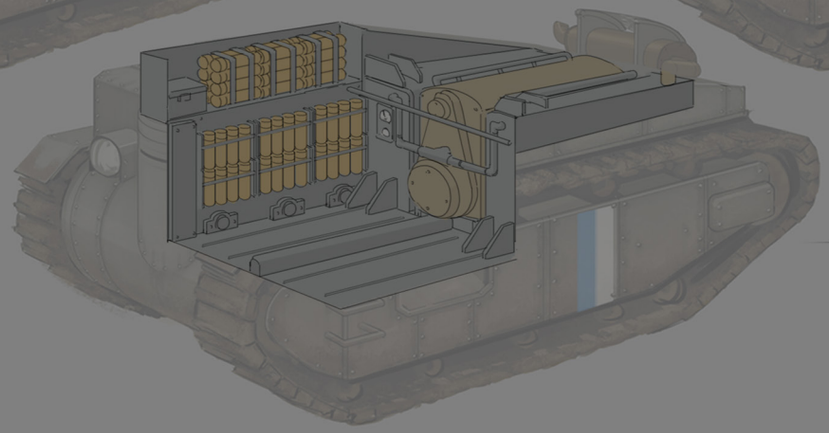

The interior of this tank was fully designed, but it was unsure how much would be actually visible. The modeler was allowed to make a call on what to omit to save on poly count.

*85K-b Falchion*

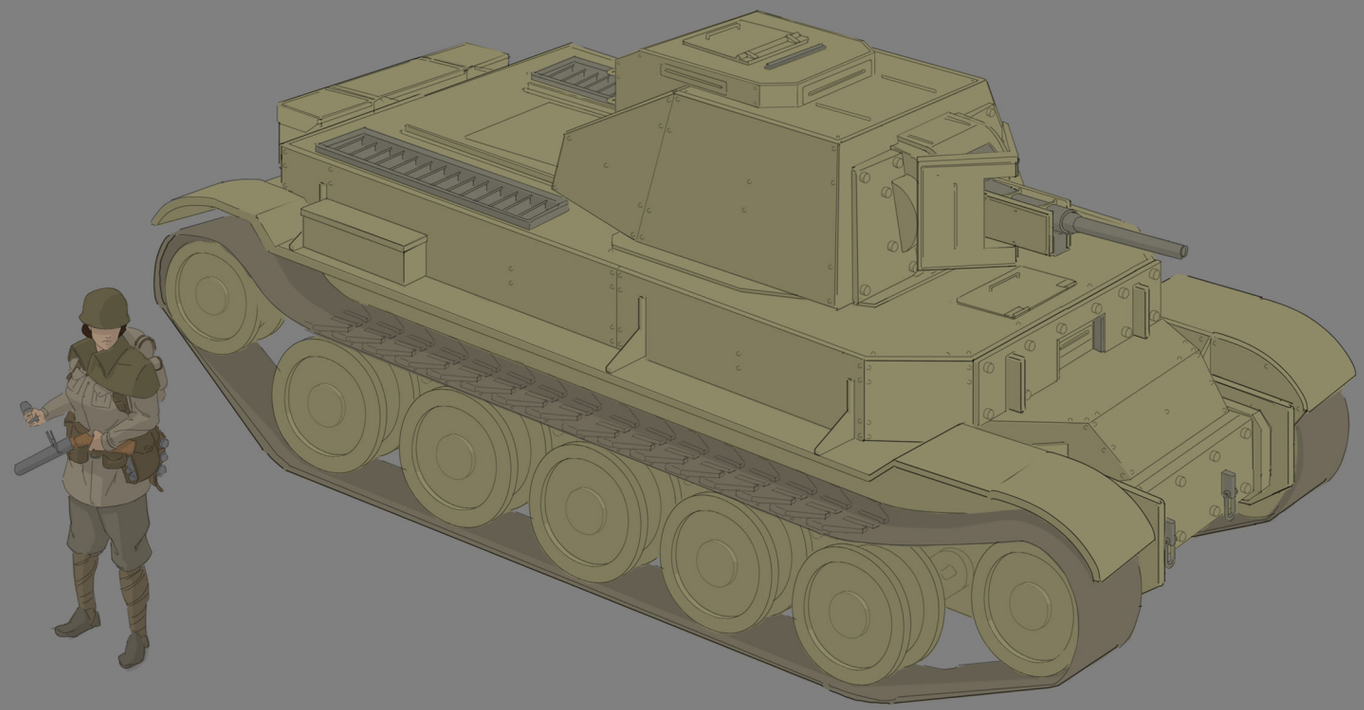

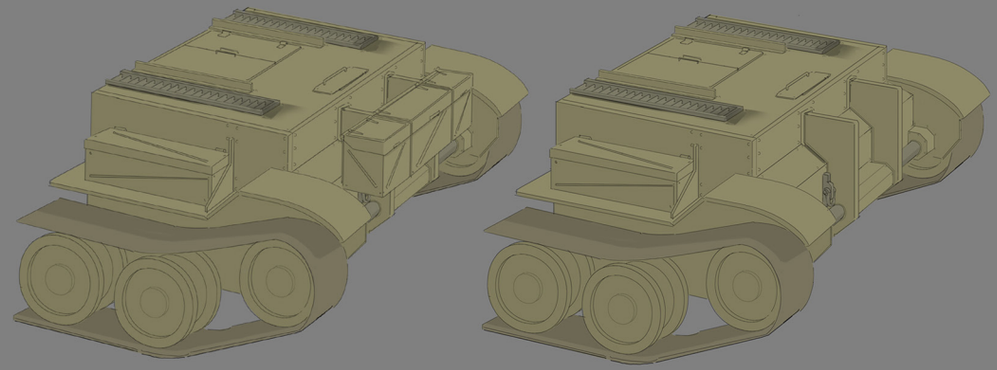

## Colonial Medium Tank

The medium tanks came later in development, and by this time core ideas like vehicle variants and faction asymmetry were figured out. The challenge for the designing the Falchion was that functionally, it was very close to the light tank. There was a big ask from parts of the team that the Colonial tank should feel more mundane in overall disposition and armament, far closer to real reference. Later in its development the mass production feature was added and it became core to the personality of the tank.

The chassis was also initially envisioned to be thinner, and there was an internal debate about widening it at the block-in stages. The final in-game tank is the wider version.

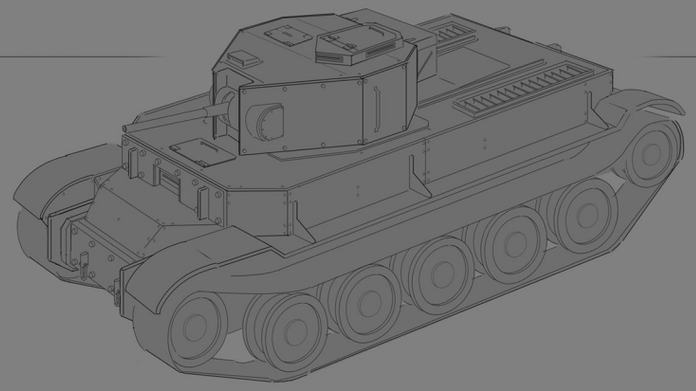

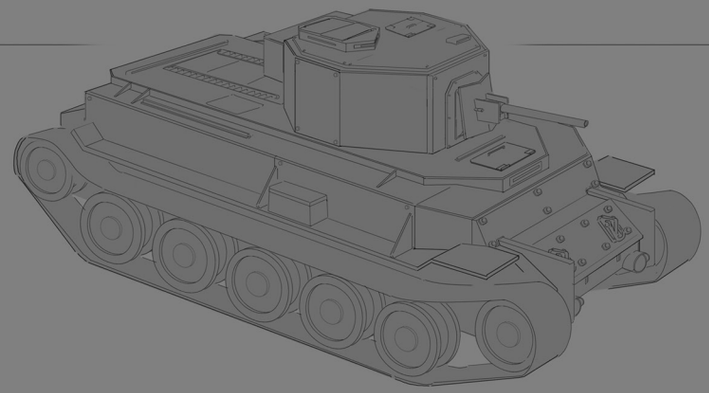

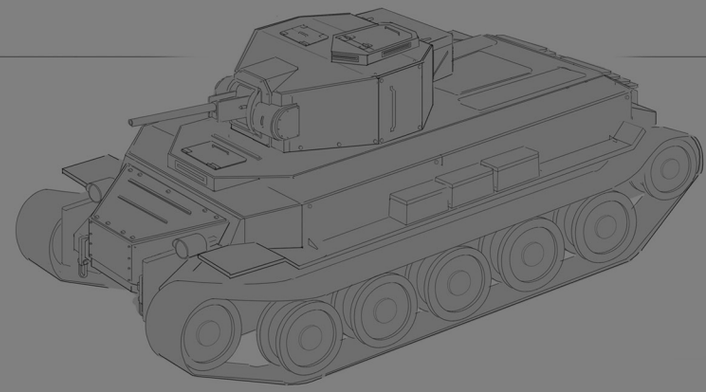

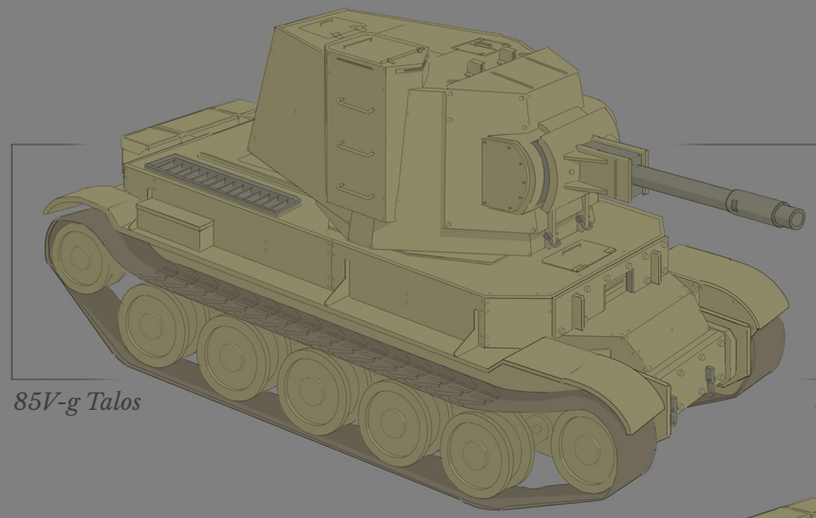

*85V-g Talos*

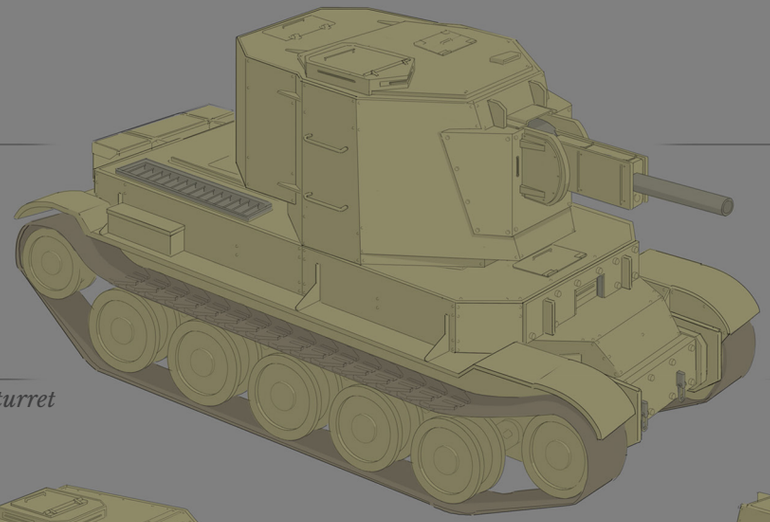

*Alternate turret*

The mass production gameplay concept created a lore idea. The Colonial Legion draws from its 16 member states and the Falchions chassis was the part of the tank that could be produced en masse then each state would add their turret and armament design making the different variants in the game.

Part of the thought that the turrets would be designed by the individual states of the legion was the idea the chassis would be overstretched and pushed to its limits. This is seen with the giant Talos turret.

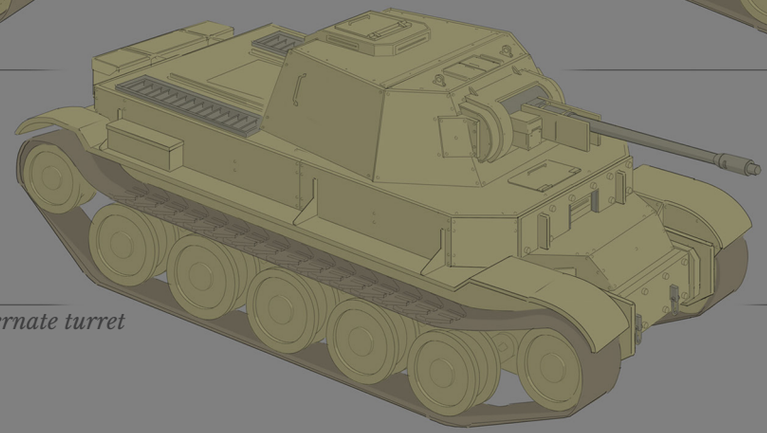

*Alternate turret*

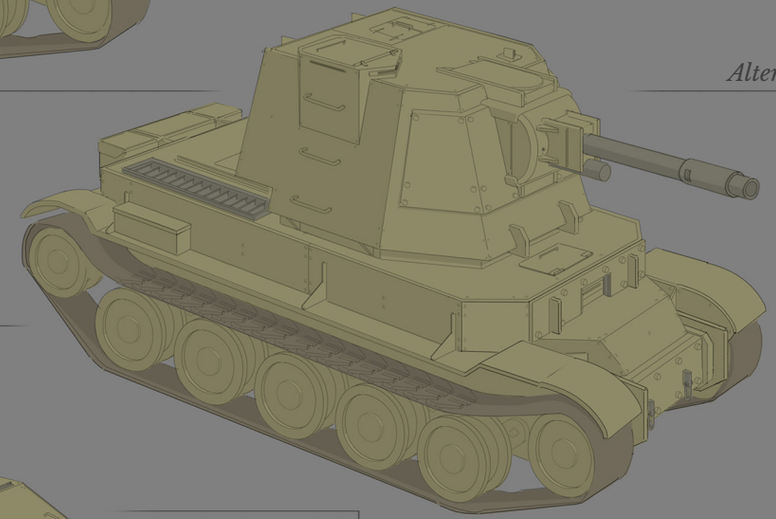

*Alternate turret*

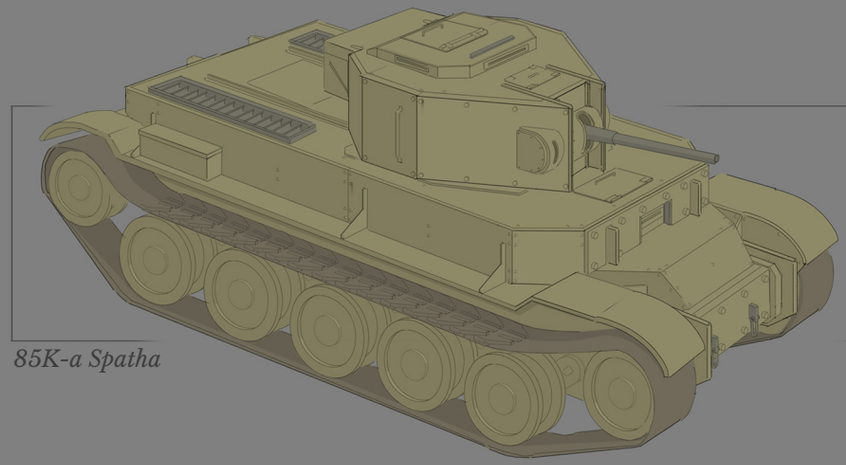

*85K-a Spatha*

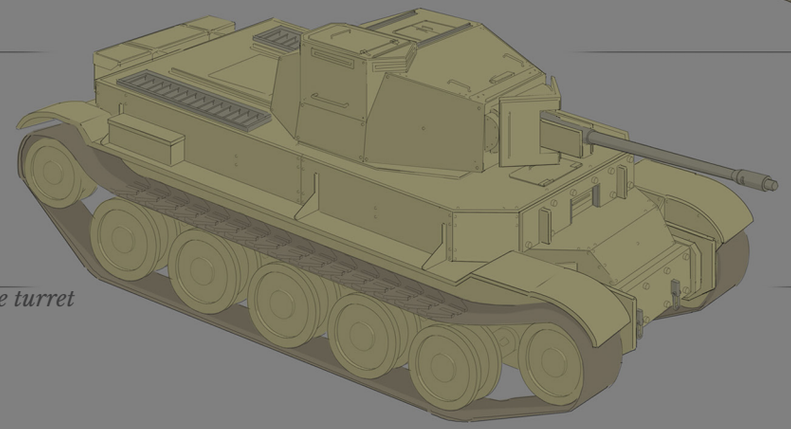

*Alternate turret*

Working on concept art creates a lot of lore ideas. Most of those don't end up in the final game, but they fuel the visuals and add to the character of the final design.

*86K-a Bardiche*

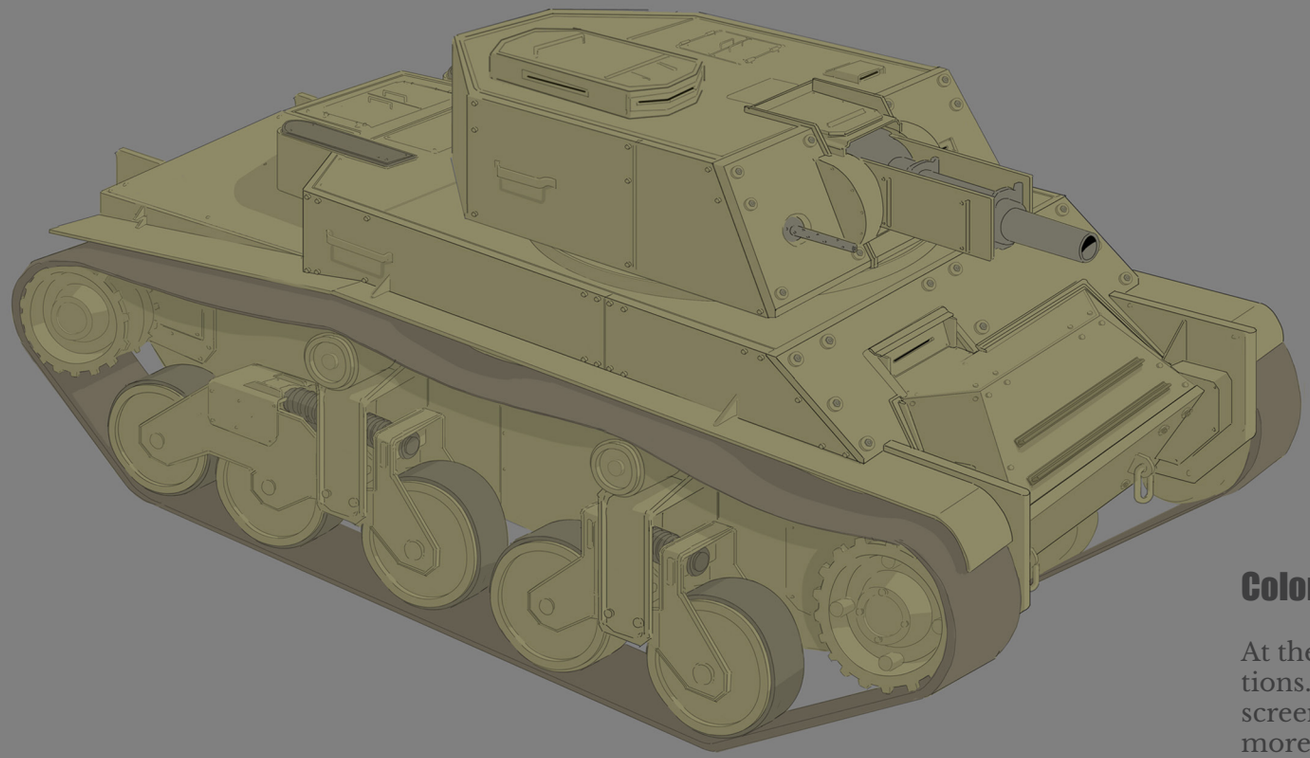

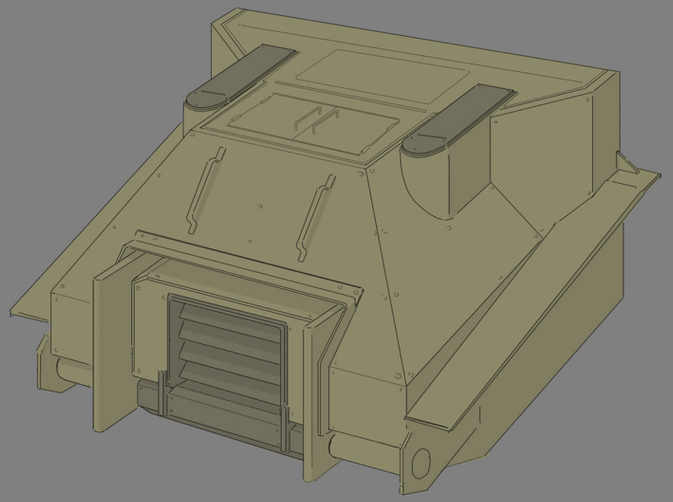

## Colonial Medium Tank 2

At the time there was a push to expand the roster of tanks for both factions. The goal was to expand the combat vehicle tech tree and to make any screenshot of the front line more varied. The Bardiche's development was more explorative, with no clear goals from the game designer other than maintaining the theme that Colonials want function over form.

An extensive list of gameplay roles were concepted and explored. Inspired by the Sherman Jumbo and 40M Turan tanks, the ideas that took off were: A larger chassis to challenge the battle tanks in size, a line breaker that could push forward and pressure enemy formations, a short barreled cannon with a fast reload to force conflicts, and thick angled armour to give the crew the feeling they can take hits. The idea that the commander would operate one of the guns in the turret was an attempt to make the crew need to interact in new ways.

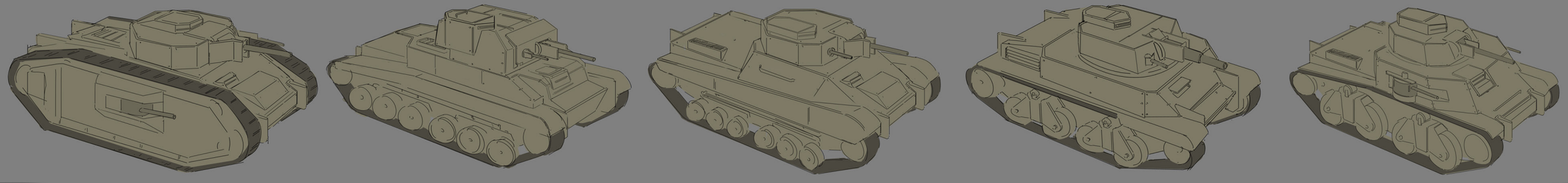

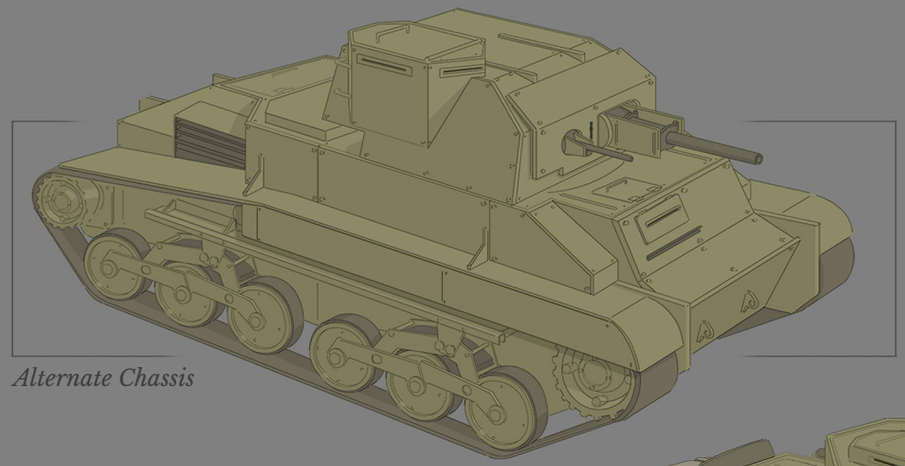

*Alternate Chassis*

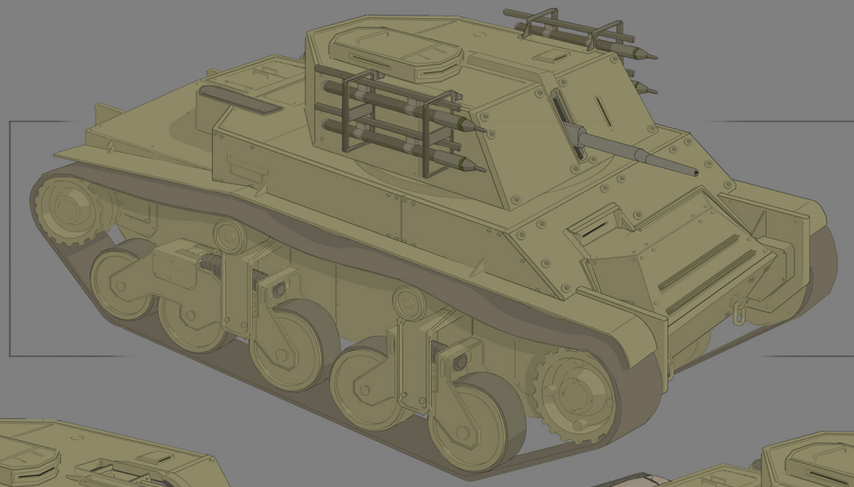

*86K-c Ranseur*
What became the Ranseur started out as an attempt to make a front line tank that didn't have a main cannon, while still feeling historically referenced.

*Unused design for a smaller caliber cannon with a long range. At the time, long range tanks would cause a lot of trouble in balancing the game.*

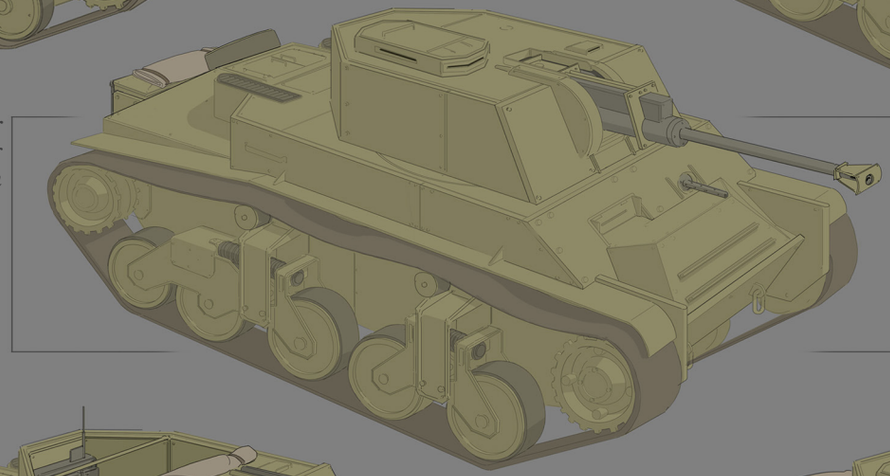

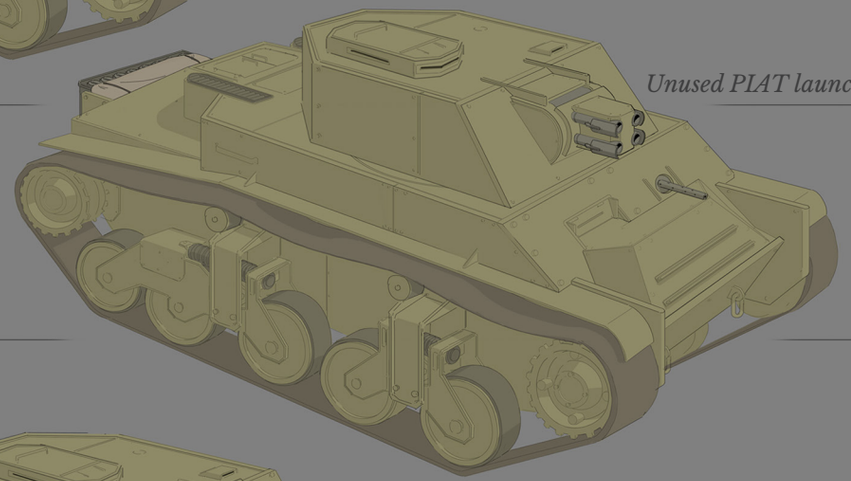

*Unused PIAT launcher.*

*Unused AA turret. Designed years before planes were possible. It didn't serve much of a front line role.*

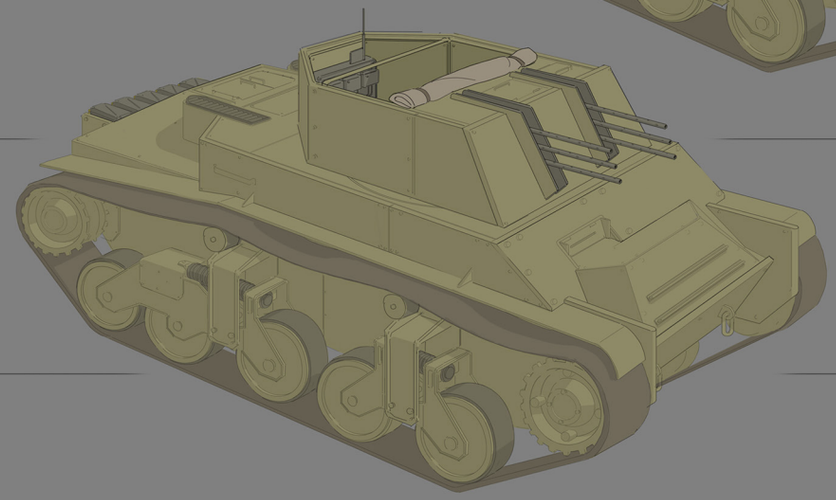

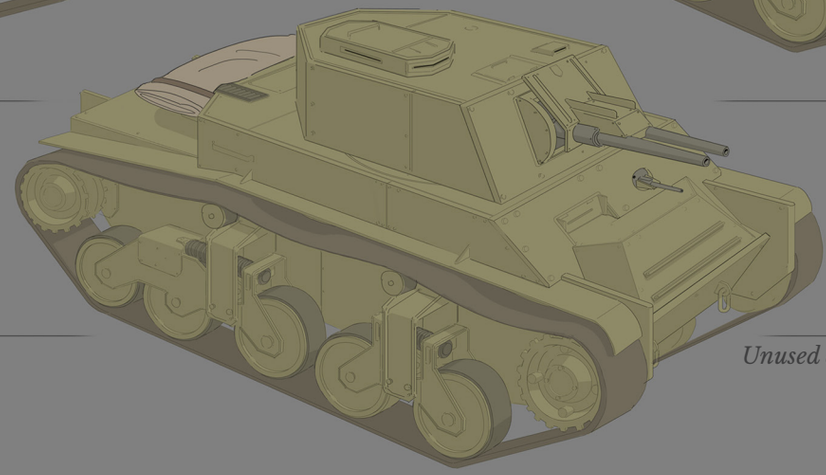

*Unused double 40mm turret.*

*90T-v Nemesis*

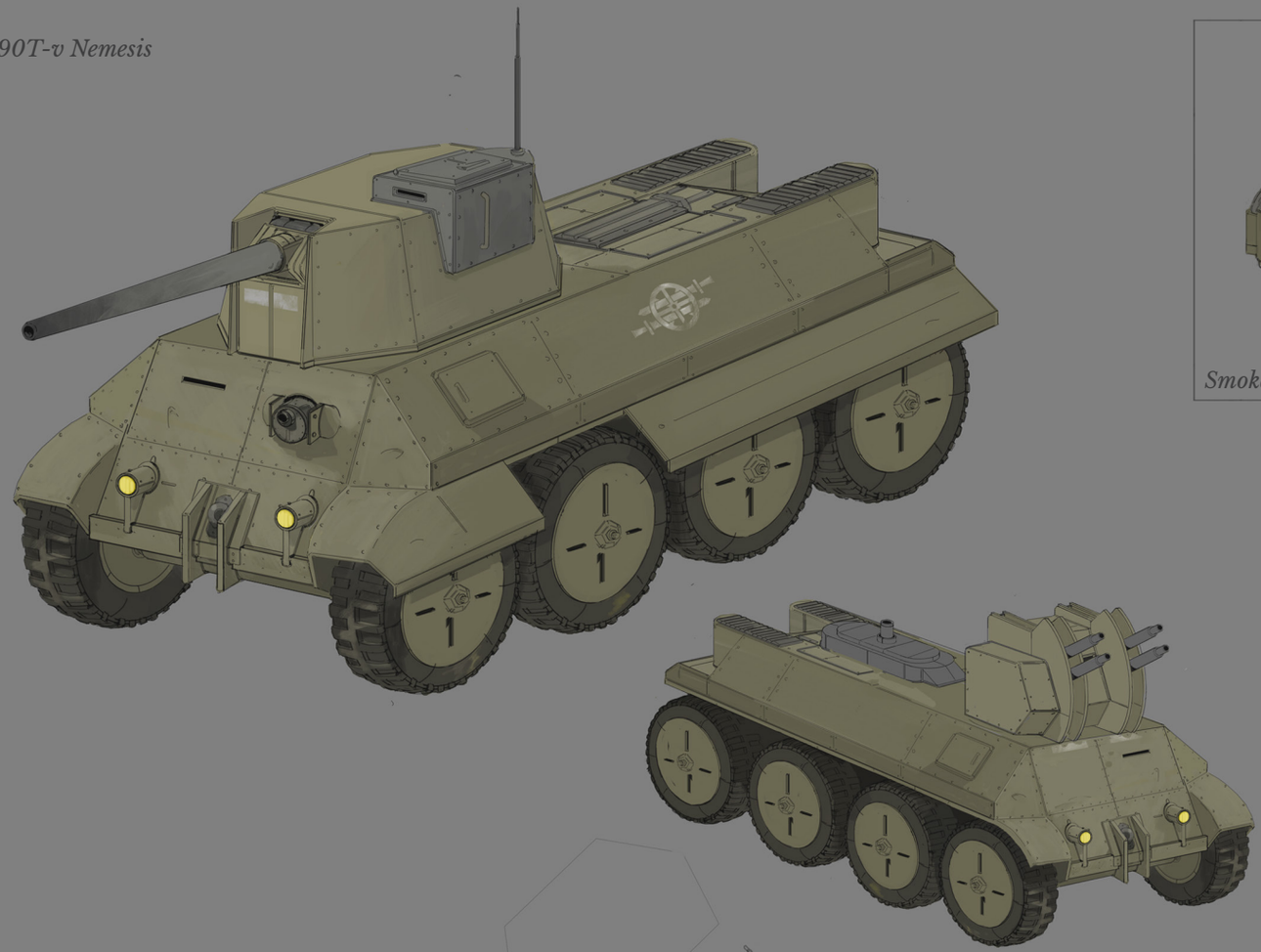



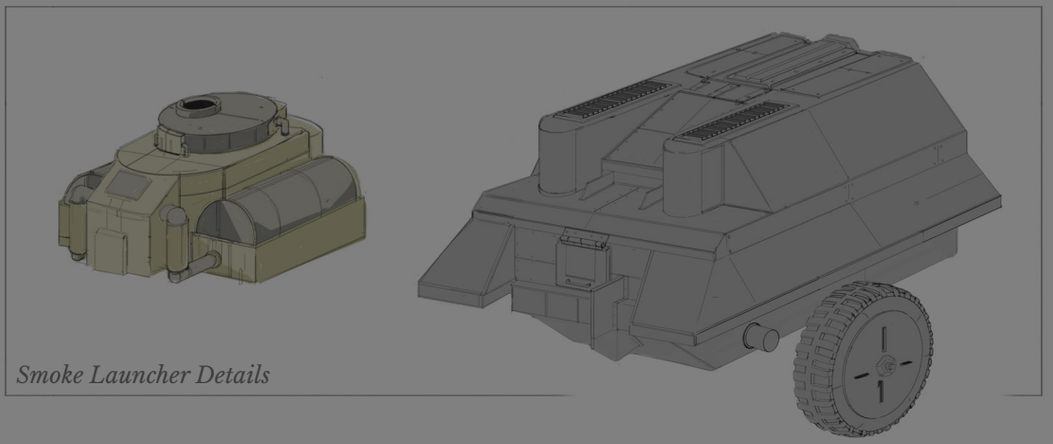

*Smoke Launcher Details*

## Colonial Medium Tank 3

The Nemesis was given to Luke to see what fresh ideas he could bring to the faction. A focus on good off road capabilities was a theme. Both tracked and wheeled designs were considered. What excited the team the most was the idea of blurring the line between tank and armoured cars. Six or Eight wheeled combat vehicles had not yet been explored in the game despite existing in the 1940's. Different gameplay functionalities were also proposed like new intel radio equipment and a unique smoke launcher system. This was postponed as low priority at the time.

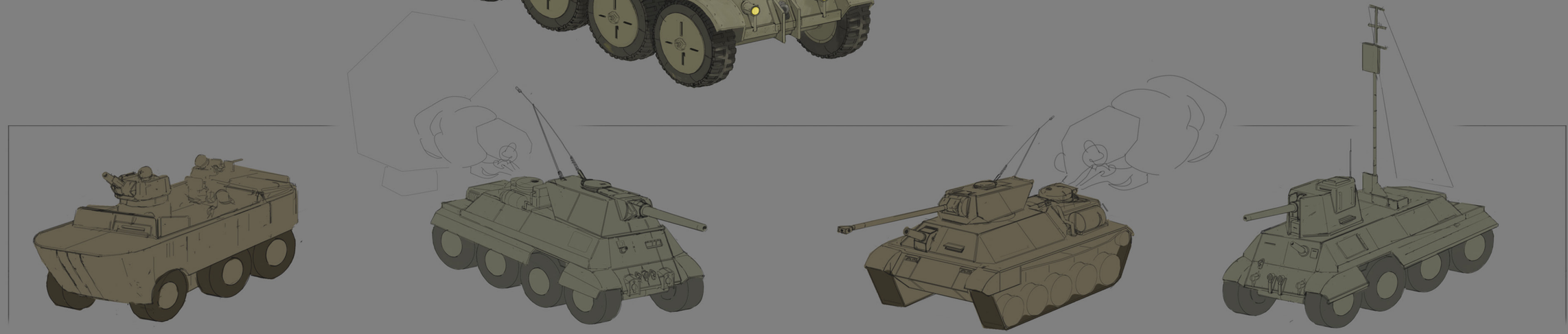

*Silverhand - Mk.IV*

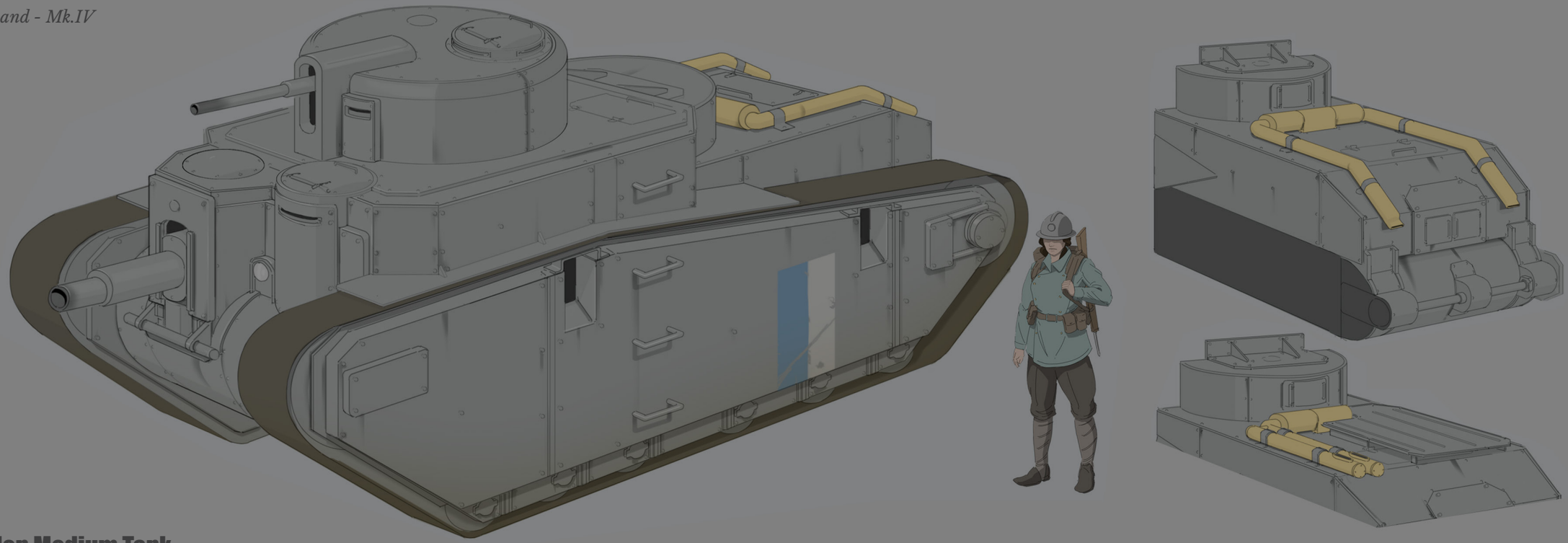

## Warden Medium Tank

At the time the Silverhand was developed, faction asymmetry was fully embraced as the way forward for the project. The Silverhand was a pitch to show how far we could push it. We wanted to make something that would define the Warden battle line while retaining the pompous, overly engineered feel of the faction. Referencing the Char B1, the idea of a tank with two main guns at the cost of agility was motivating and stood out. Later, when the idea of variants was prominent the Silverhand was a fun chassis to explore.

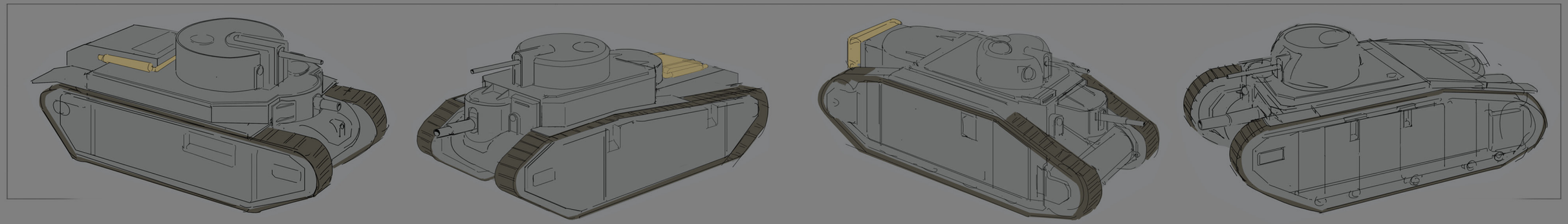

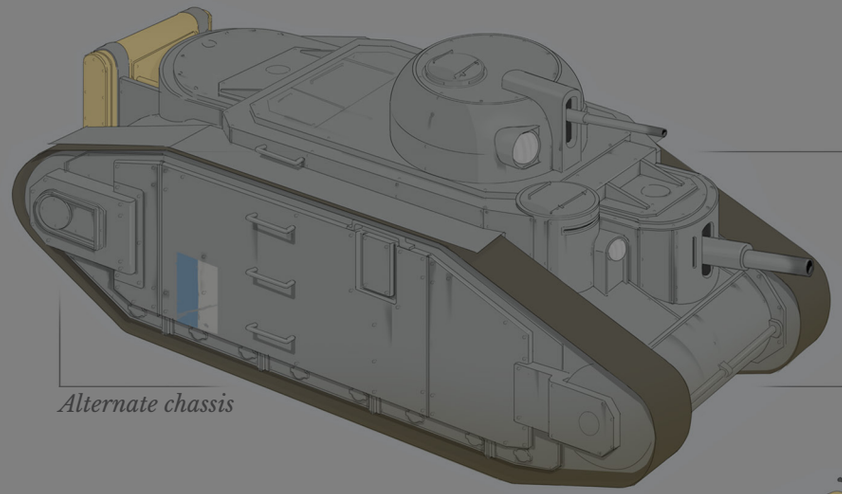

*Alternate chassis*

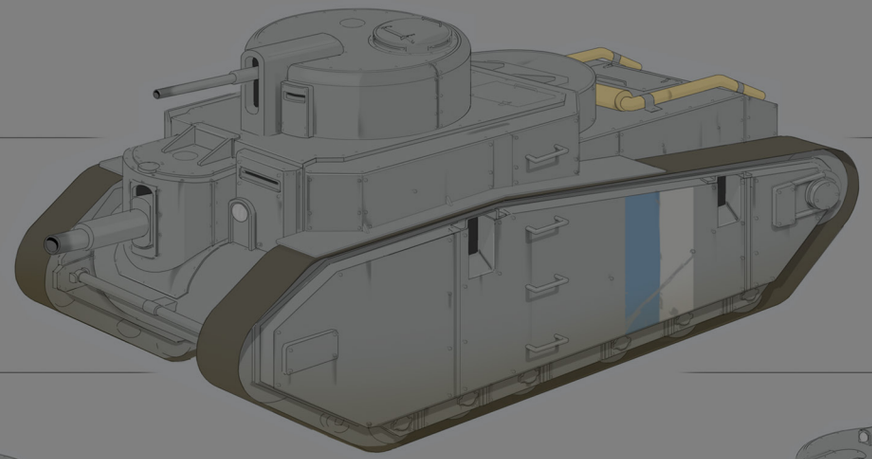

*A slight alternate track design.*

*Right: Unused lightly armed variant. This included three turrets with as many 20mm guns as we could fit.*

*Below: Unused lightly armed variant. The hull mounted gun was pitched as a rapid 40mm clip-fed repeating cannon.*

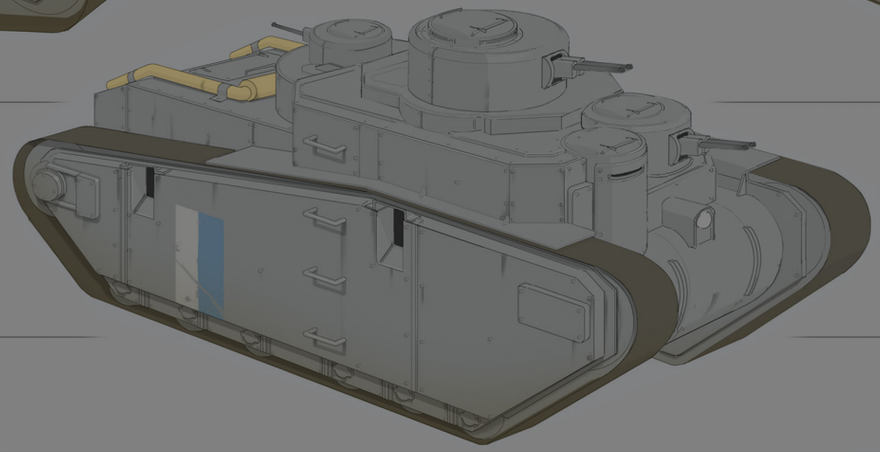

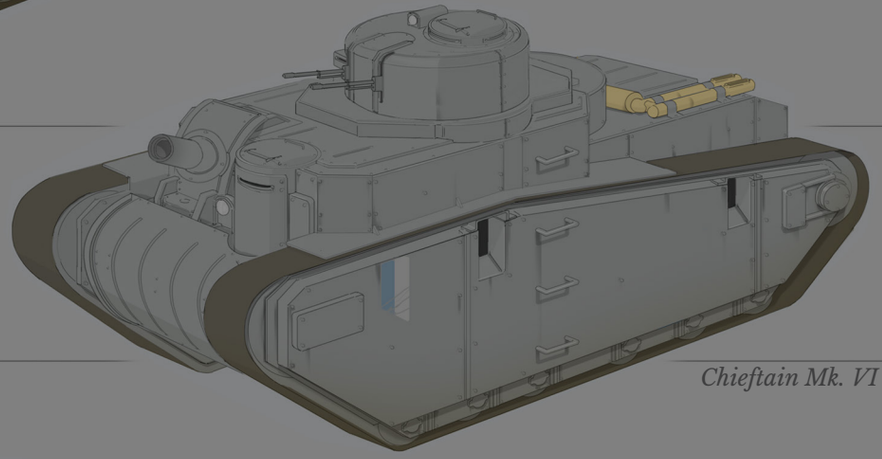

*Chieftain Mk. VI*

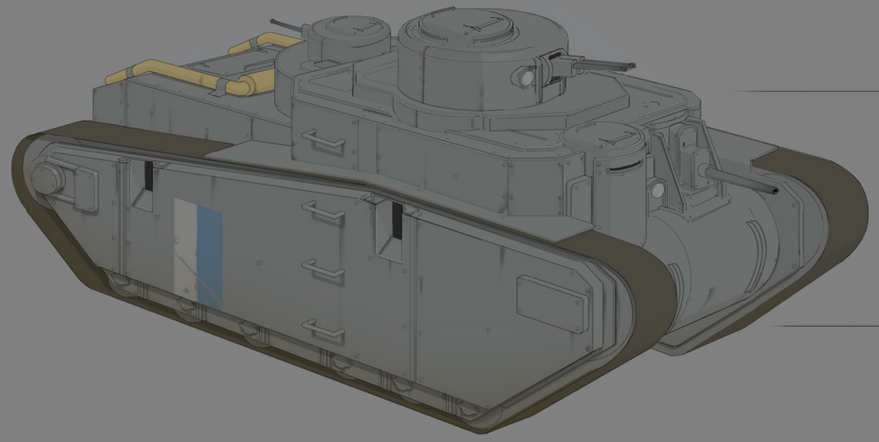

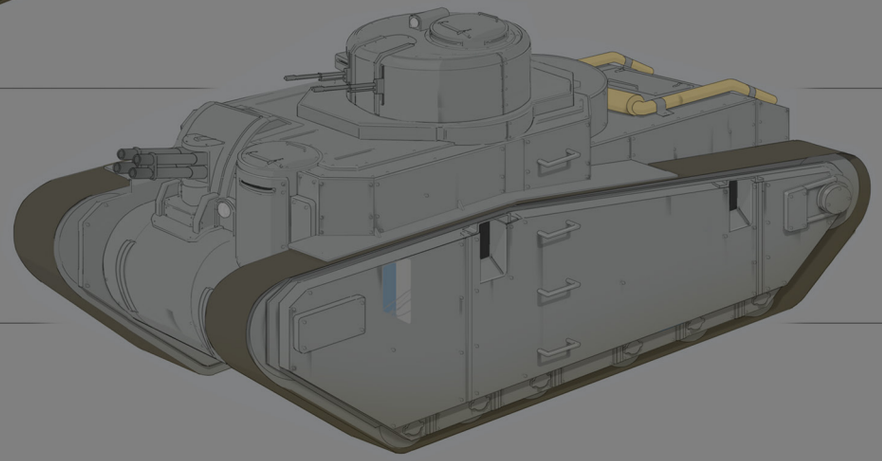

*Unused variant of the Chieftain. A quad 30mm cannon that fired more like a shot gun was pitched.*

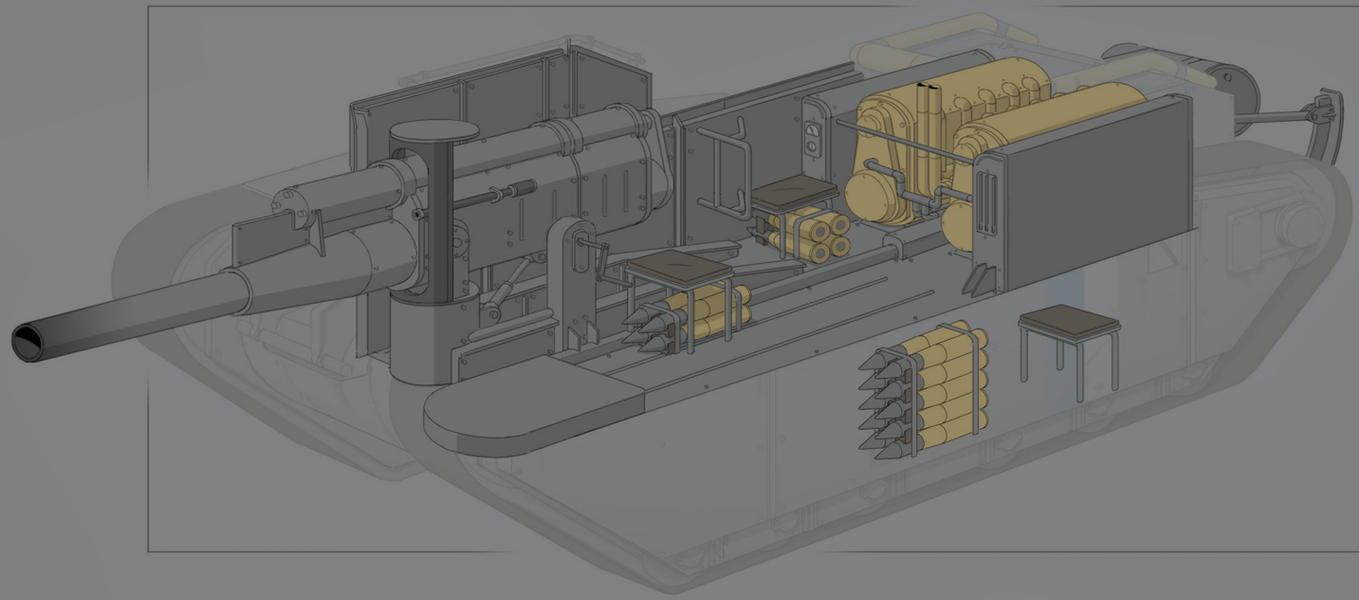

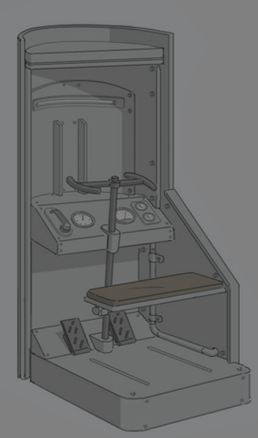

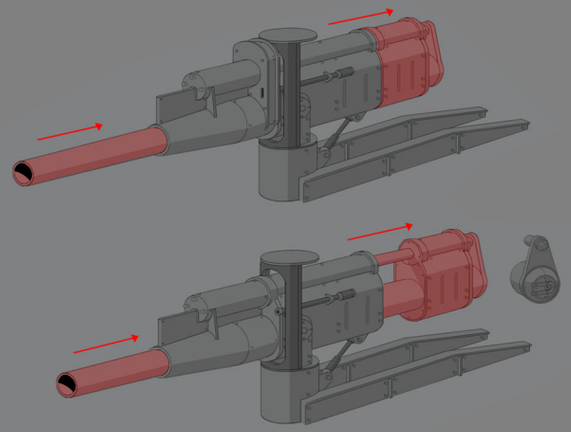

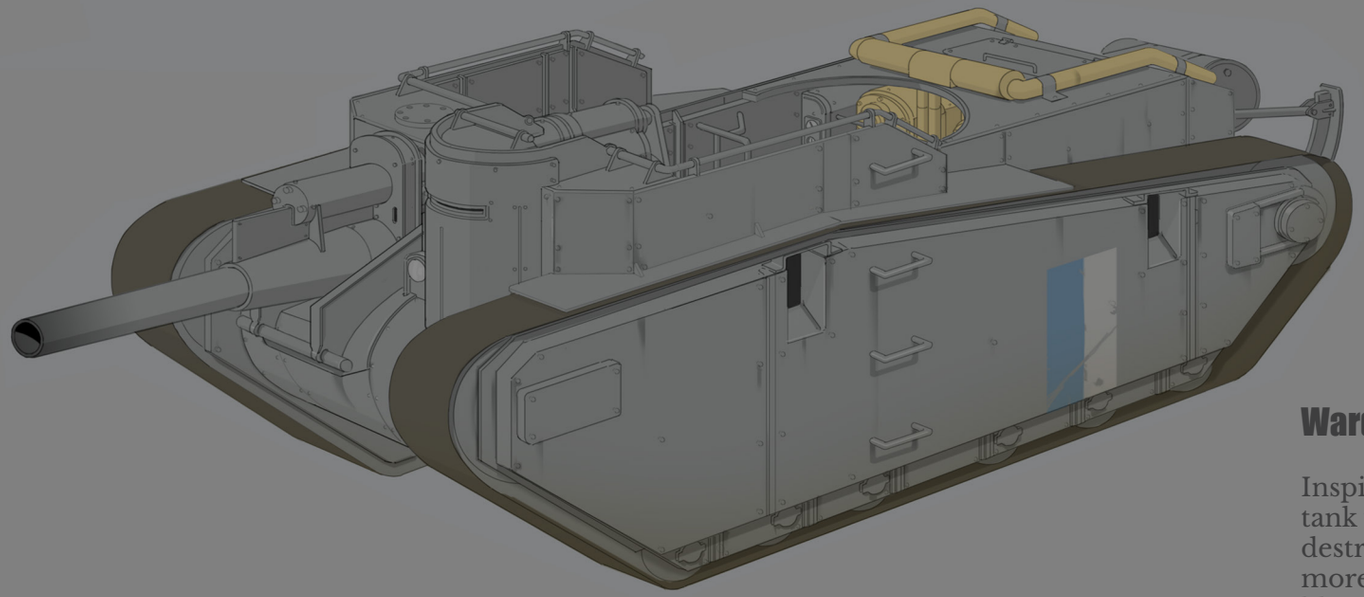

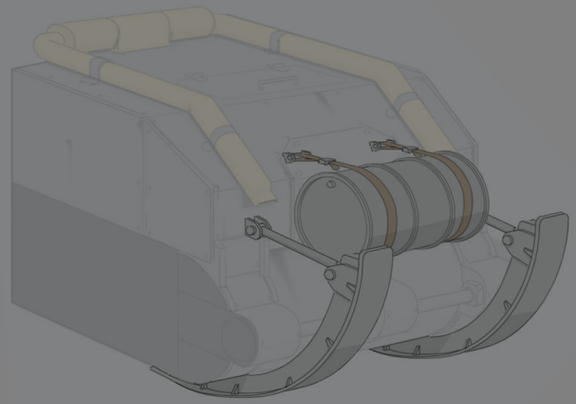

SIlverhand Lordscar - *Mk.* X

## Warden Medium Destroyer

Inspired by the look of Russian artillery guns aimed down and fired as anti tank weapons, the Lordscar was created to fill a need for a large caliber tank destroyer. Throughout development, there are many internal requests for more open topped vehicles, and this was the first vehicle that needed a visible engineer and custom animation were required.

*Gallagher Highwayman Mk. III*

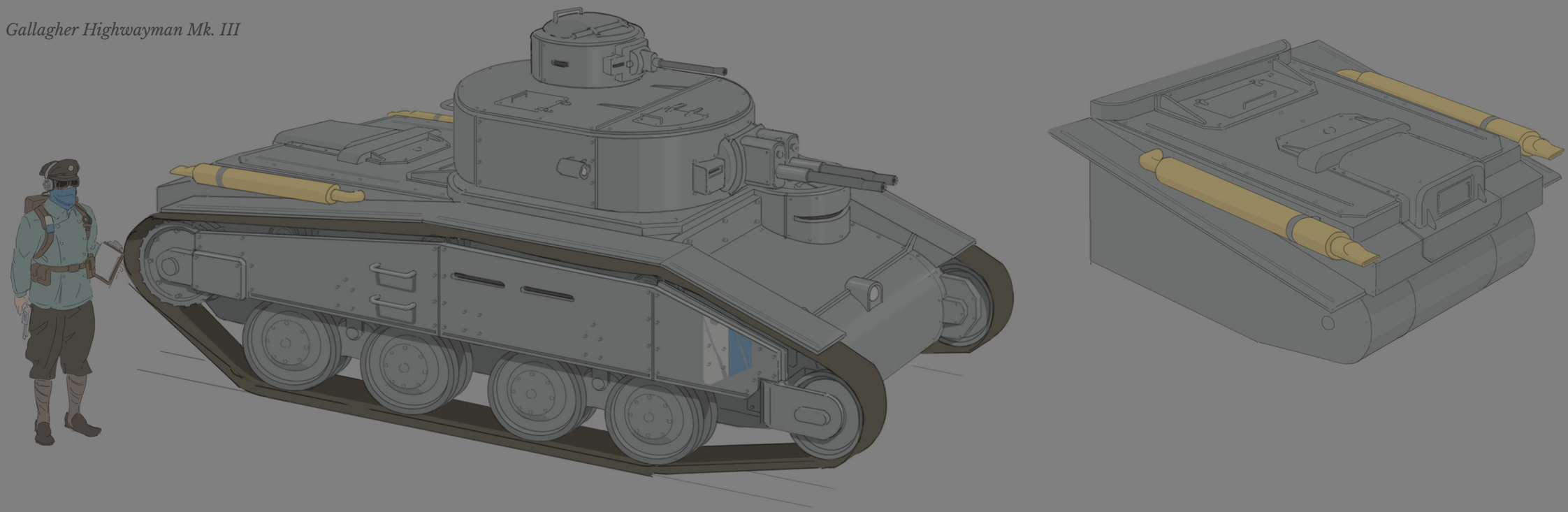

## Warden Medium Tank 2

Around the same time the Bardiche was developed for the Colonials, the Outlaw was developed for the Wardens. At the time the Wardens had the Devitt and the Silverhand. The pitch for them was a Cruiser style, lightly armed, fast chassis. As sketches were produced, an idea formed that this tank would be what the Wardens exported to other fronts of the war before they were pushed back to their own doorstep. What might surprise long time players is that the twin 20mm variant was actually the pitch for the base model. At the time an effort was attempted to make tanks without 40mm cannons, as those were seen all over the battlefield. Similar to the Bardiche, a large number of roles for the chassis were drawn up before the final design was selected.

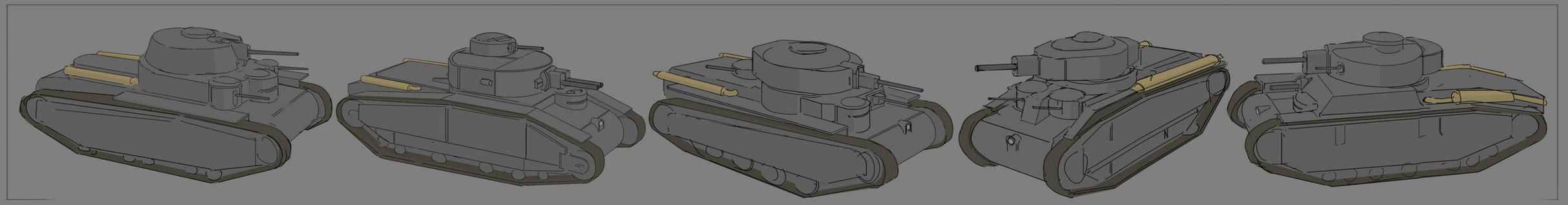

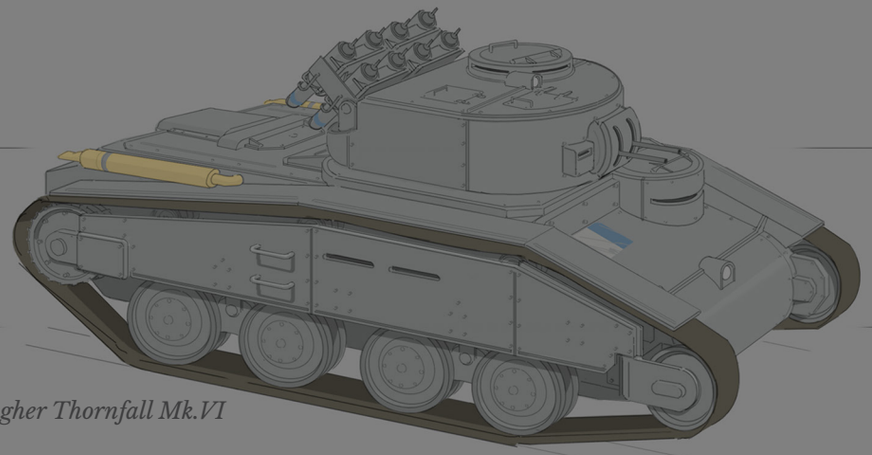

*Gallagher Thornfall Mk.VI*

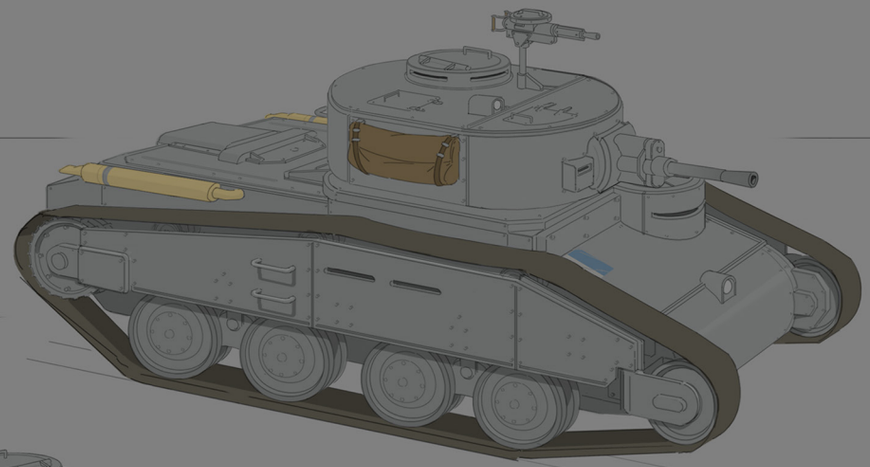

*Gallagher Brigand Mk. I*
What has become the default of the chassis, the Brigand was the last variant designed. There was a big push and lots of debate to get the unique repeating 30mm cannon as its armament.

*Gallagher Outlaw Mk. II*
Chosen at the 11th hour to be the original base vehicle, the long barrel turret and hull mounted storm rifle version of the chassis has now become a powerful variant of the Brigand. An alternate version had the Stormrifle coaxled to the main cannon.

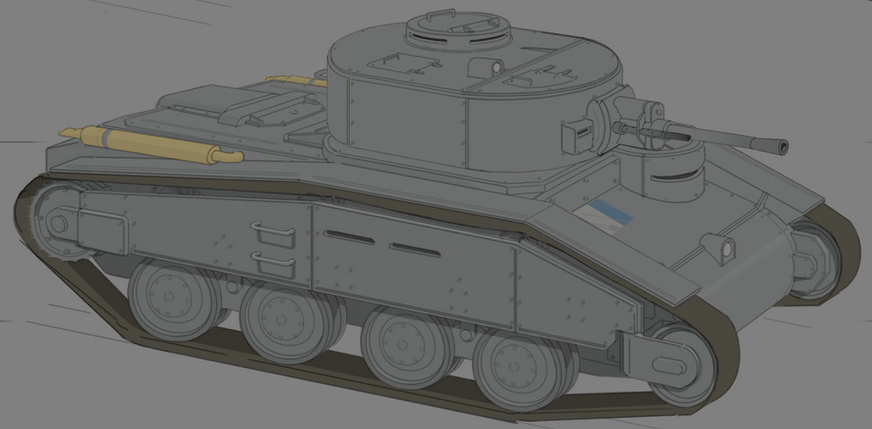

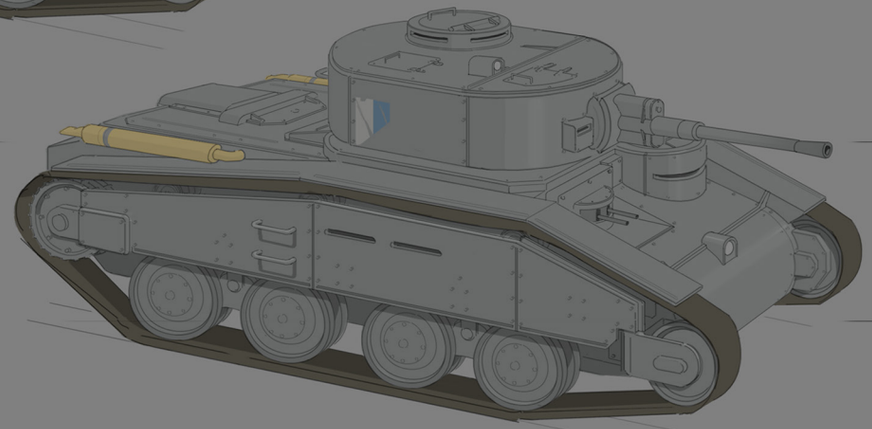

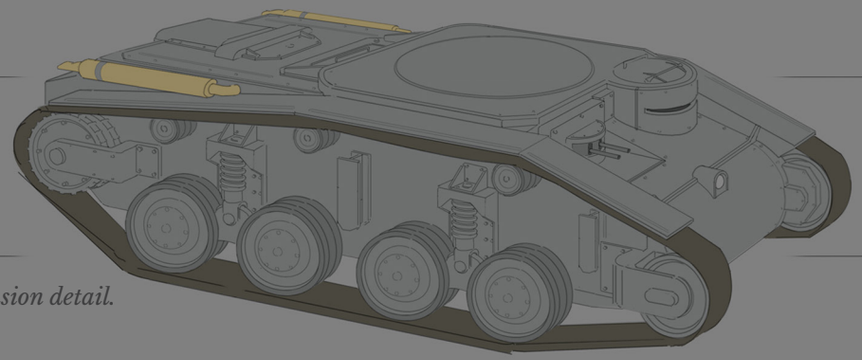

*Suspension detail.*

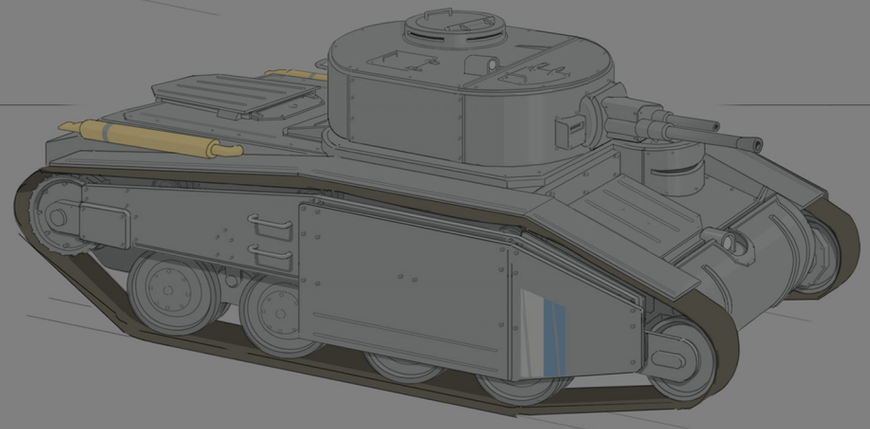

*Unused armoured variant with variable 40mm and 30mm cannons.*

*HC-7 Ballista*

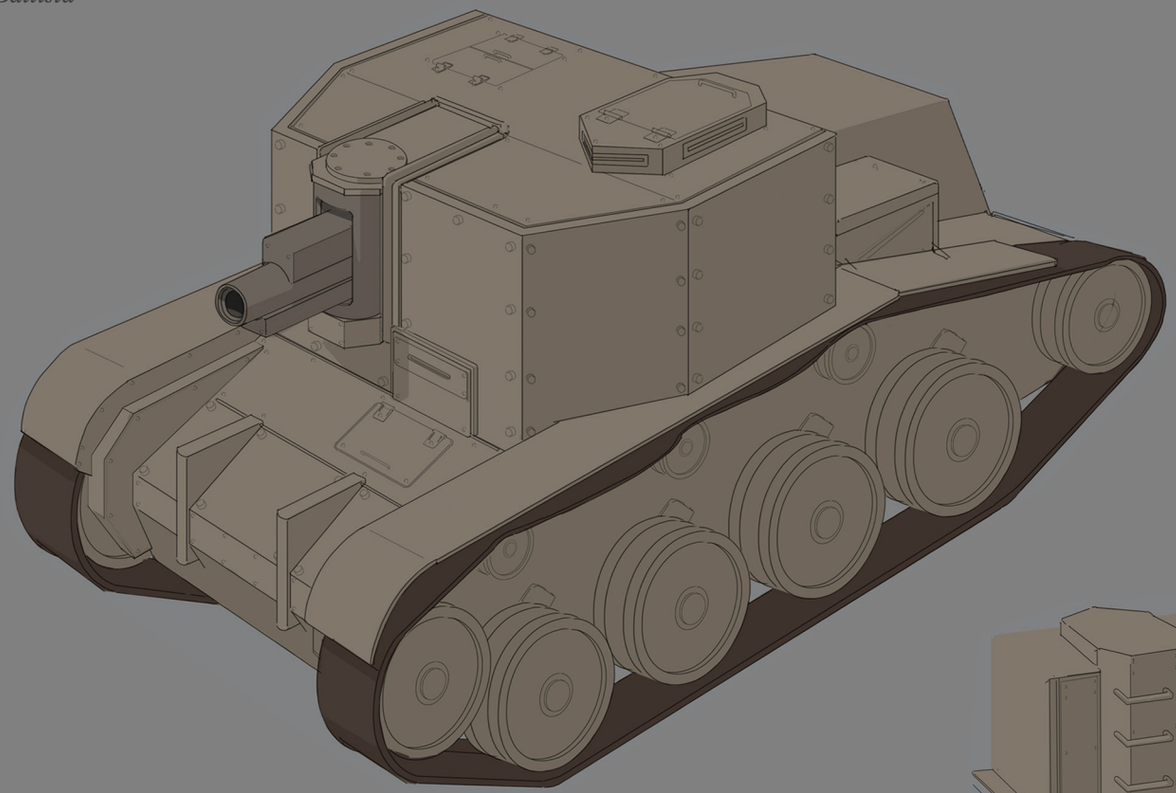

Designed to look thick, heavy and slow, as the visuals were developed there was a debate over if it should be classified as a  light or medium chassis. The debate has never been fully resolved.

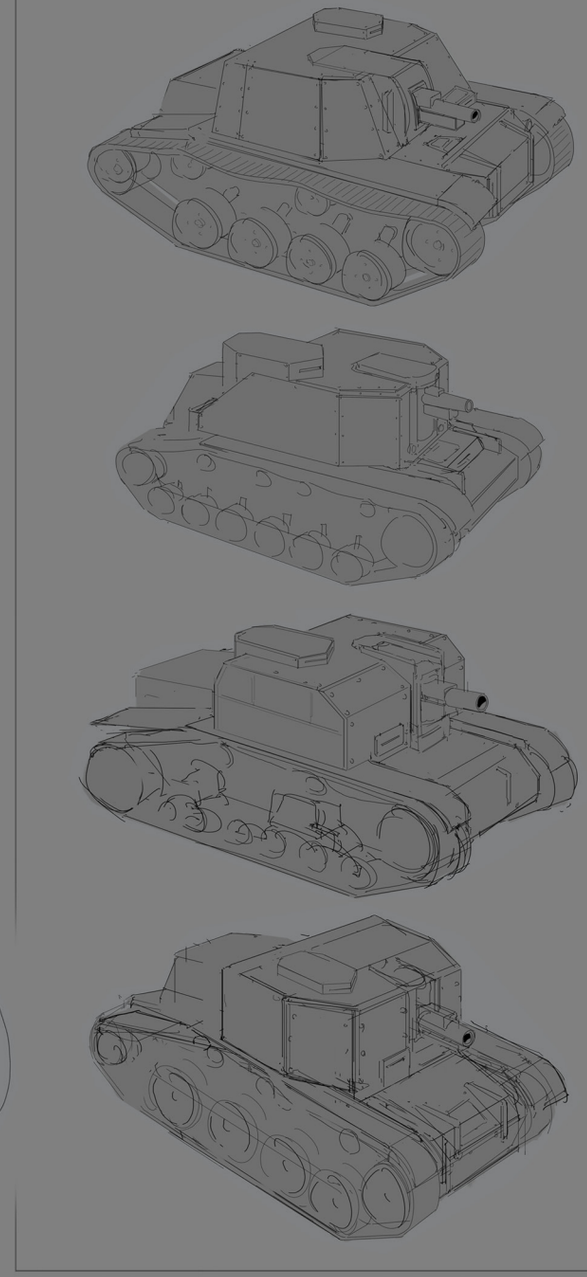

## Colonial Siege Tank

At the time of development, internally, the big exciting new feature was the 250mm ammunition and the siege tank to fire it. Inspired by bunker busters like the Churchill AVRE, the ballista was designed to let players engage defenses and garrisoned buildings. Around this time, the game featured a number of different artillery shells like smoke and gas shells, and part of the hope was that the siege tank might get an expanded set of unique ammunition. As the game developed, the idea of different ammunition was dropped. Worse yet, at release the tank felt underwhelming and the team learned a big lesson about the player's first reception to a new vehicle. In time, it has found its place in the Colonial line up.

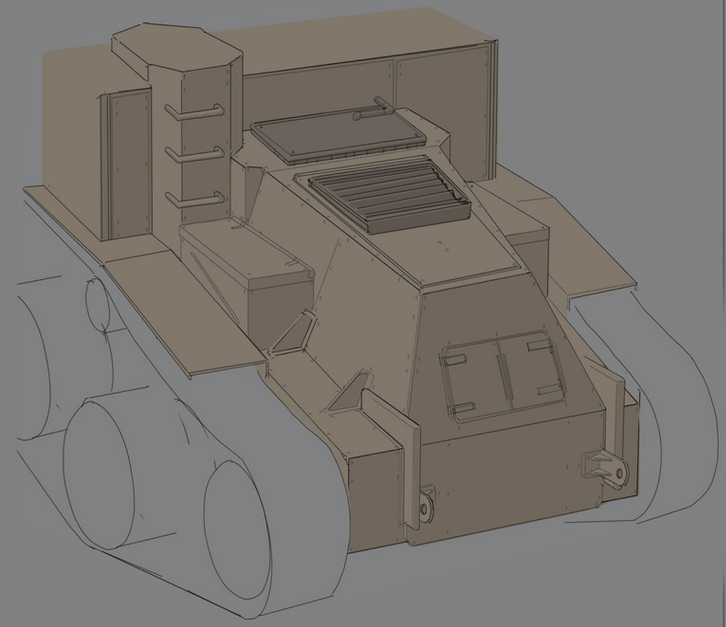

*HC-2 Scorpion and alternate designs*

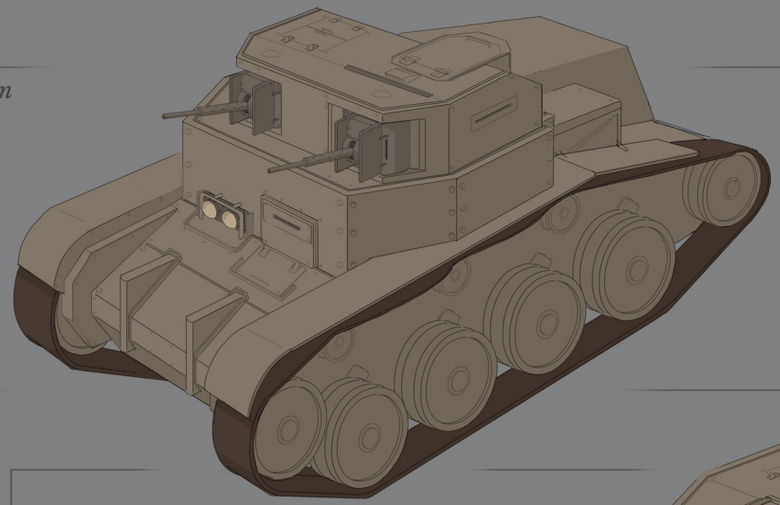

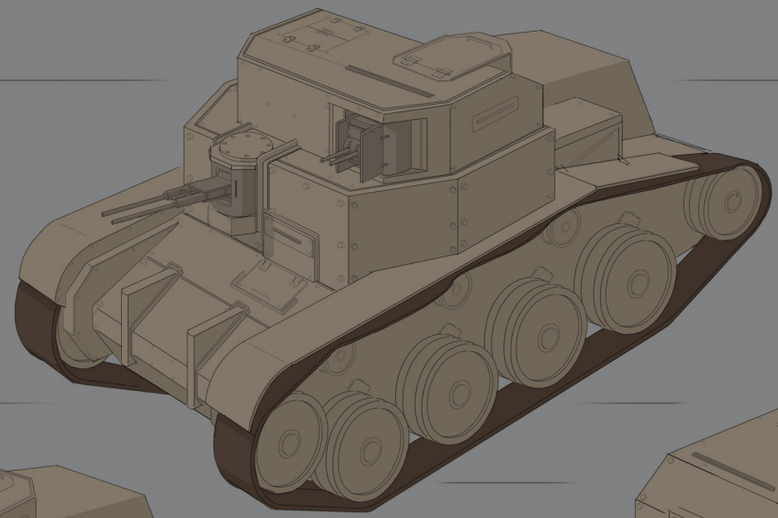

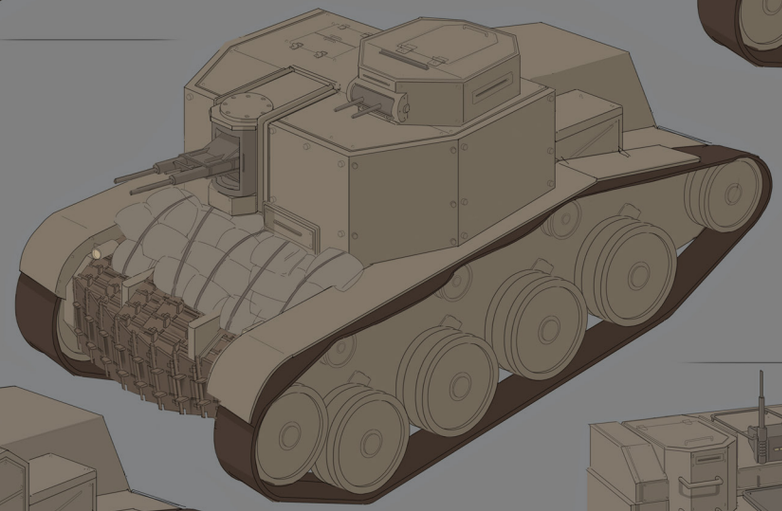

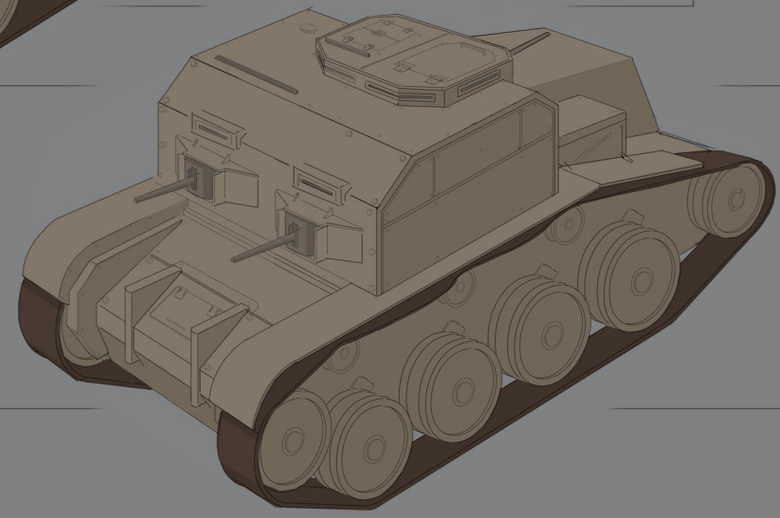

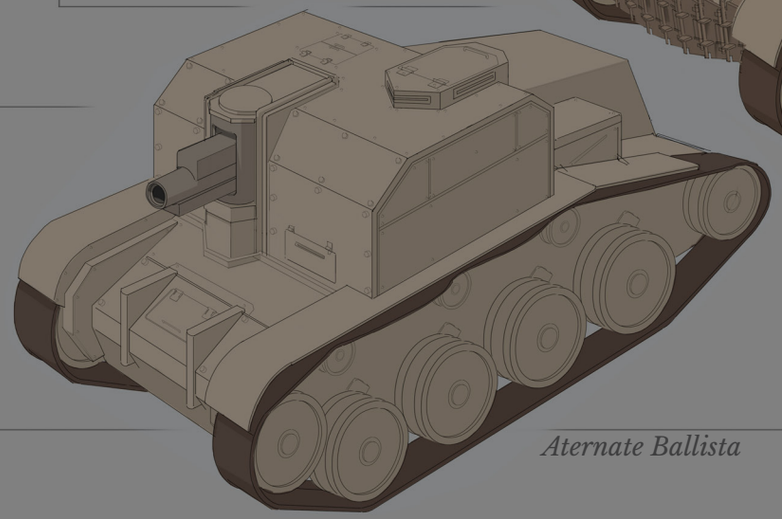

*Aternate Ballista*

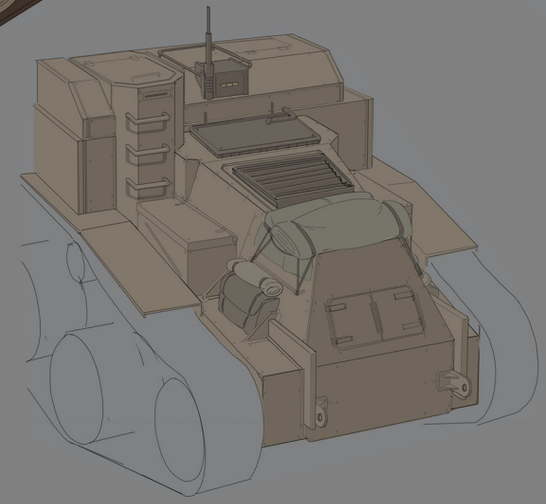

A pitch to make what was effectively a mobile bunker that infantry could fight around and use as cover resulted in the Scorpion. Not meant as a front line tank, its role was thought to engage and pin infantry. There was a late suggestion to let players sit on the exterior. This is an idea we have wanted to propagate to all vehicles in the game, but it has always been low priority.

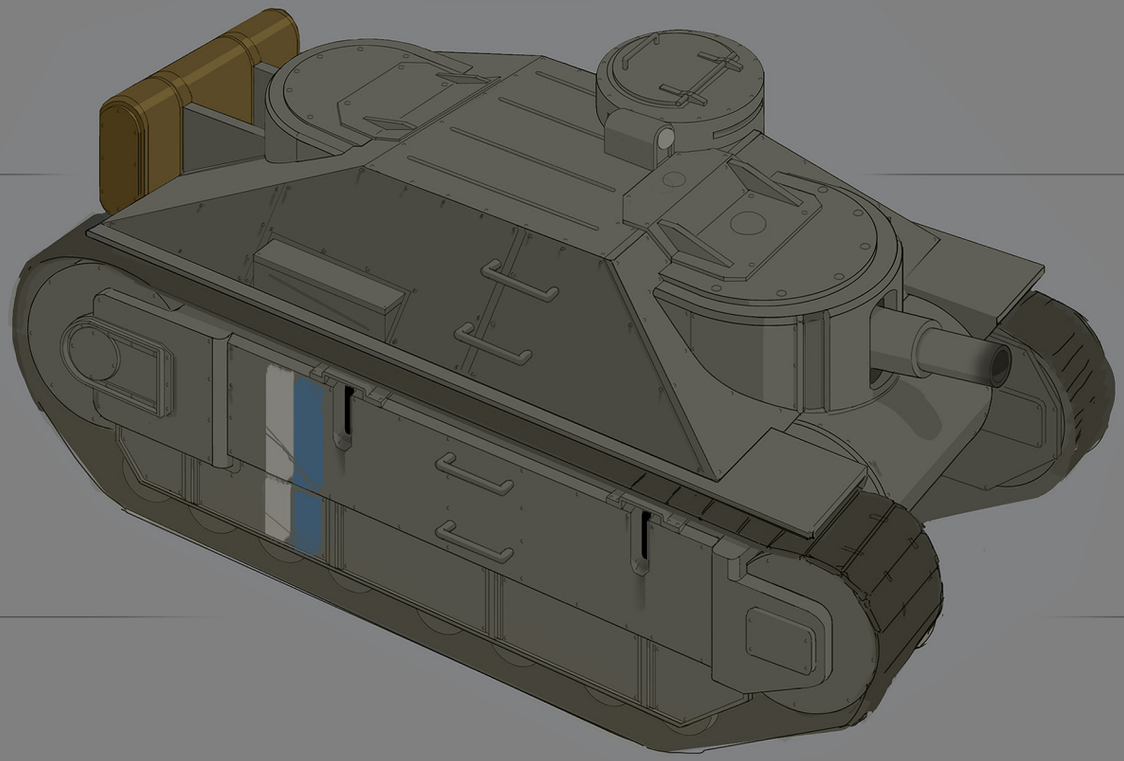

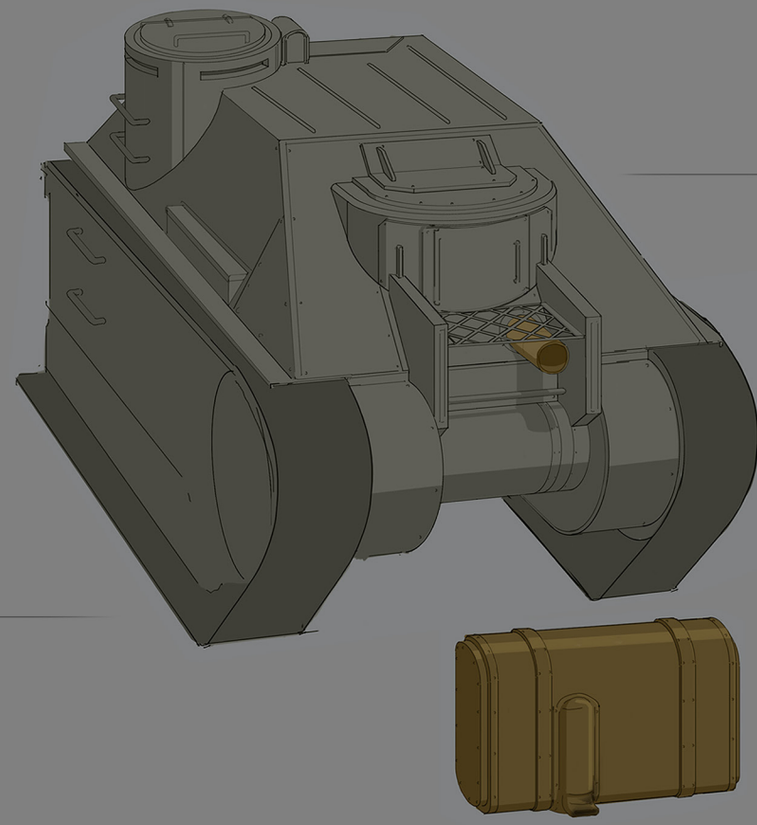

## Warden Siege Tank

What would become the Widow tank destroyer was first designed as the Warden Siege Tank. Both siege tanks were the last vehicles designed before the switch from symmetry to asymmetry. The model was complete and textured before it was put on hold at the last moment.

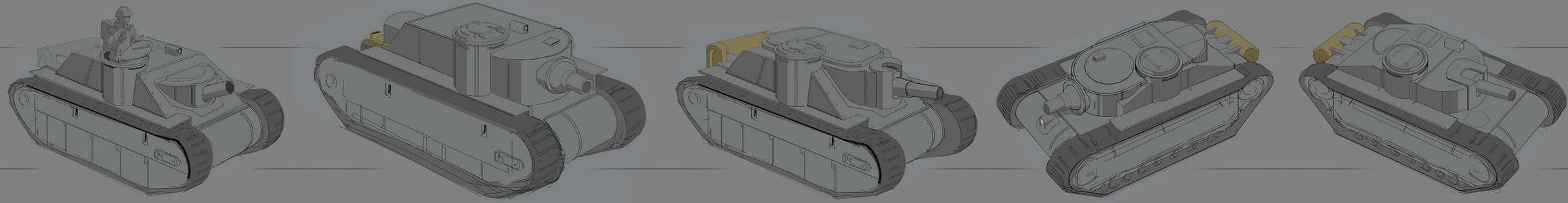

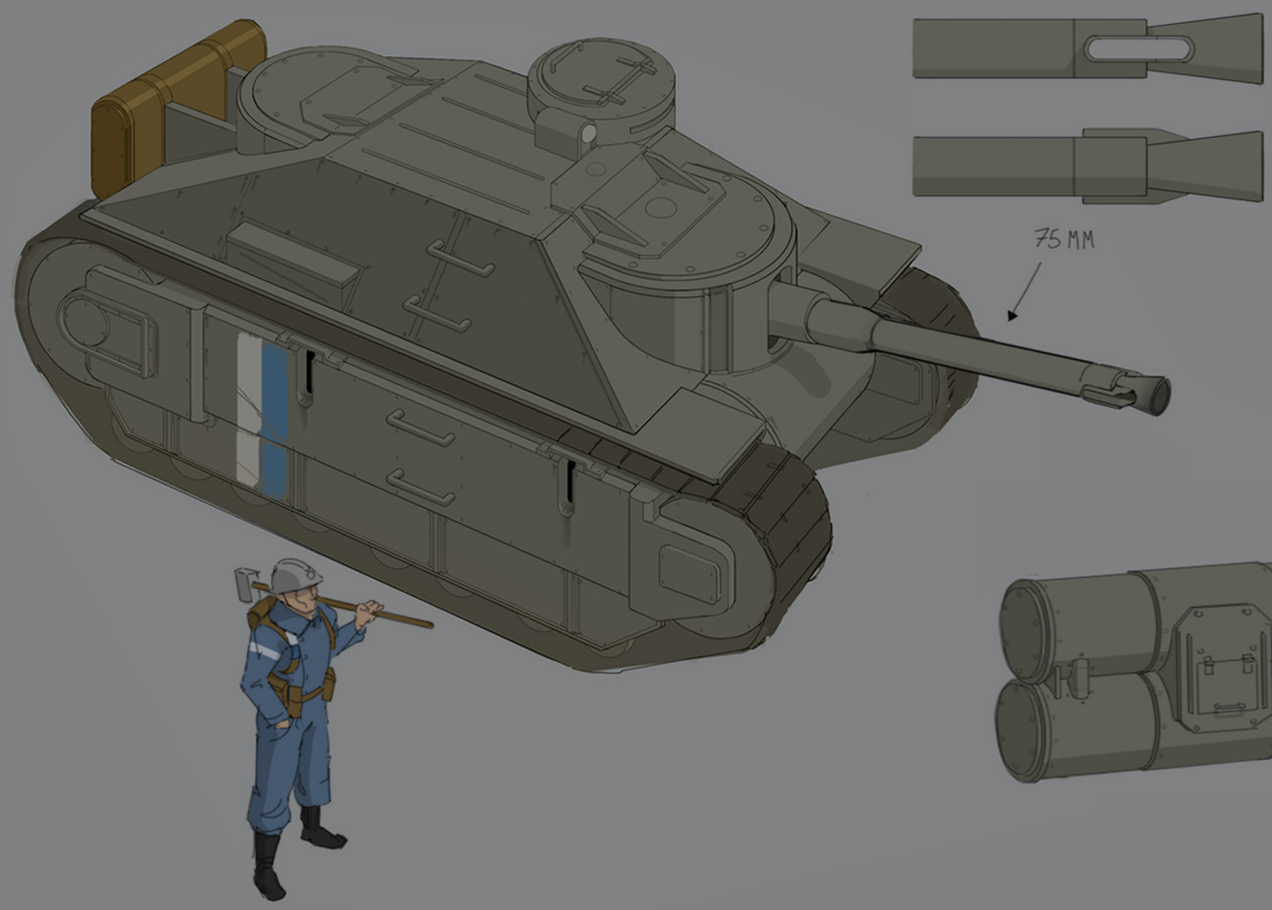


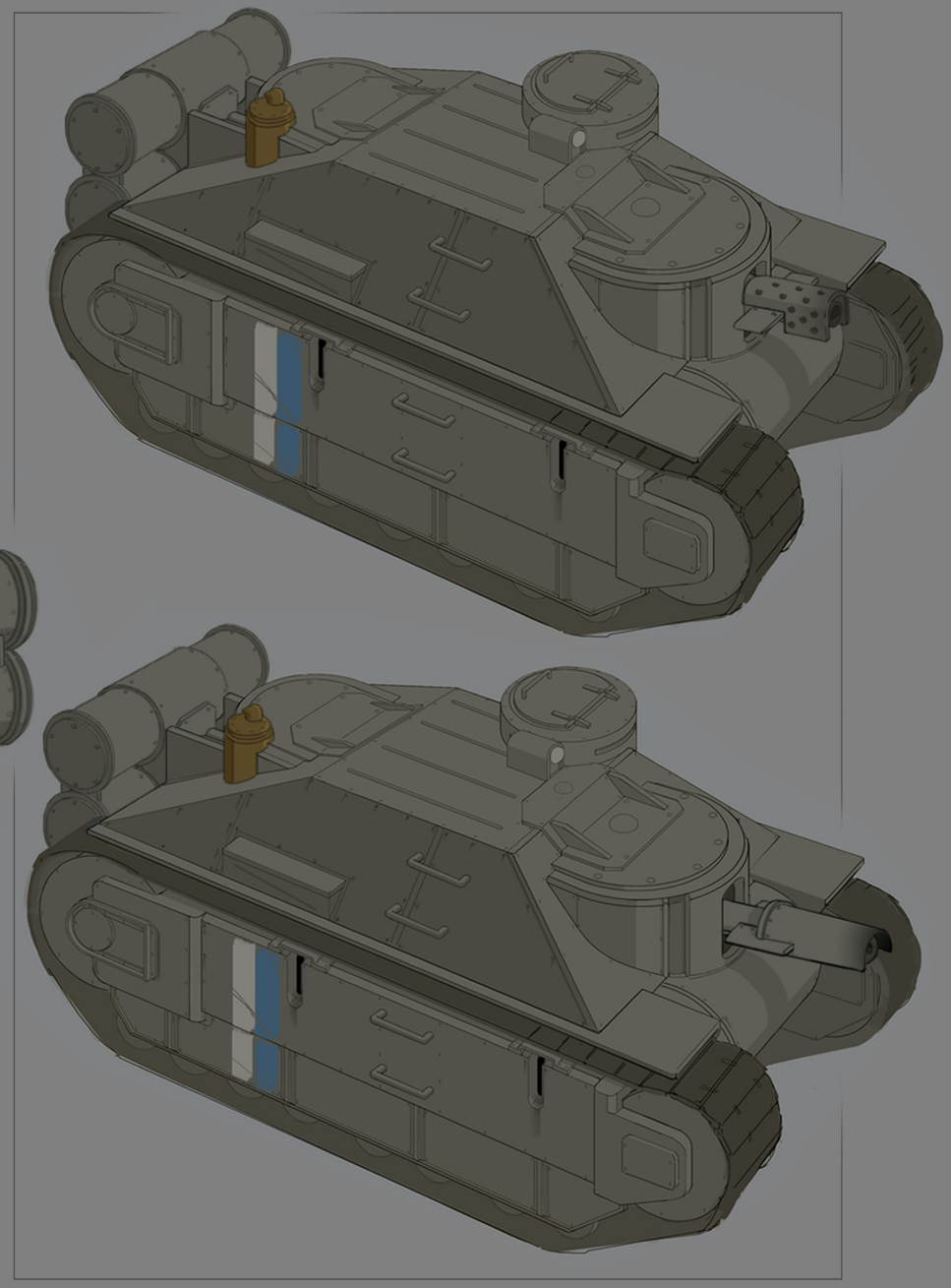

*Noble Widow Mk. XIV*
After waiting in the wings for over a year, the chassis was re-pitched as a tank destroyer. The visual update was designed with the newly added 75mm ammo in mind. However, this was around the same time as the development of high velocity ammunition. The high velocity 68mm was chosen, and the Noble Widow was born.

*Noble Firebrand Mk. XVII*
Designing flame thrower tanks for the Inferno update, the Widow chassis was an easy pick. We knew we wanted the Colonials to have a lighter tank and the Wardens a slower heavier tank. The aesthetics of the chassis gave the flame thrower a solid unstoppable look, similar to its  siege tank origins.

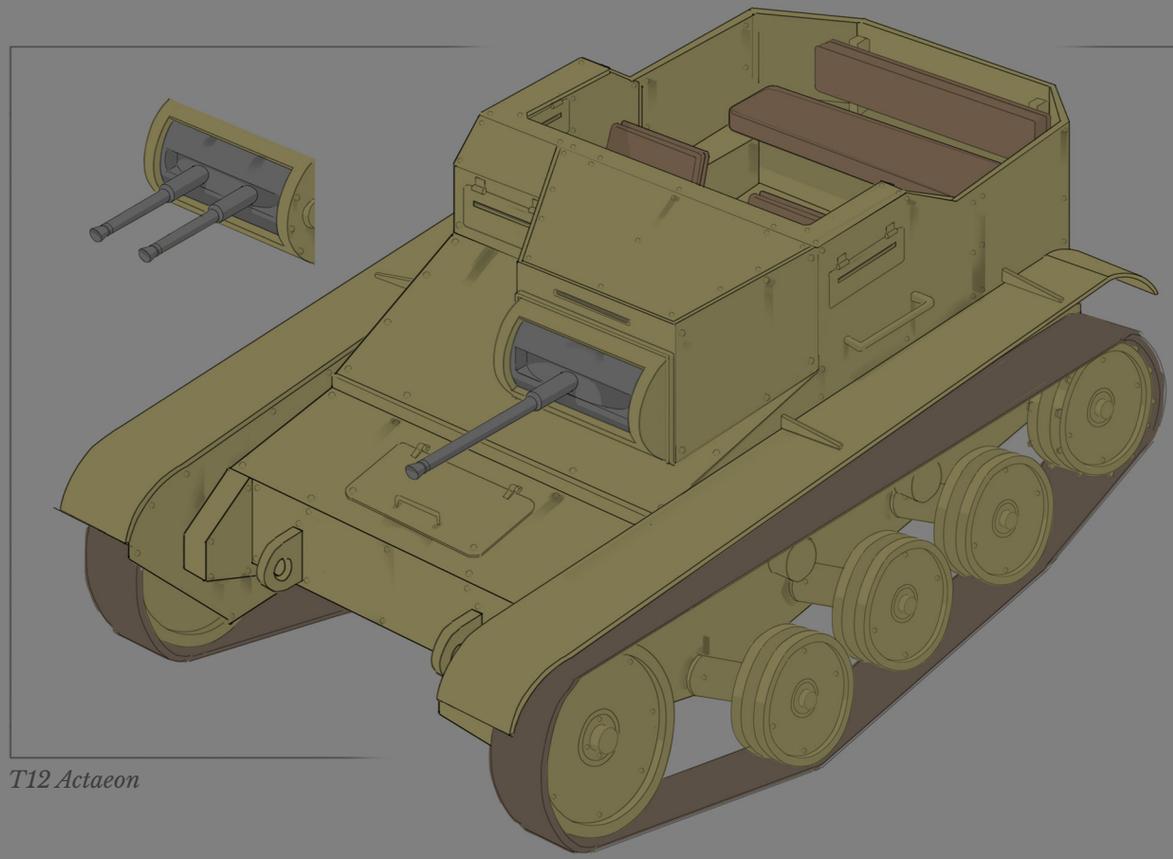

*T12 Actaeon*

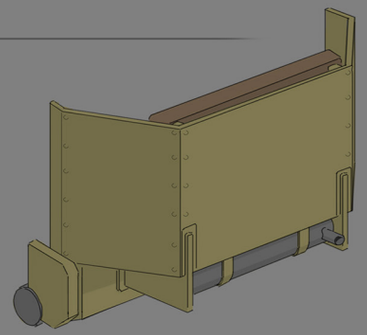

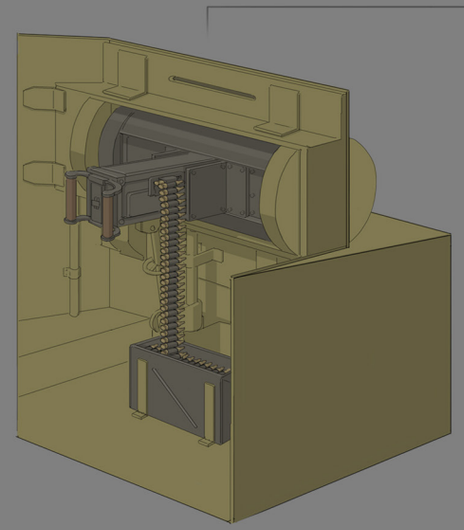

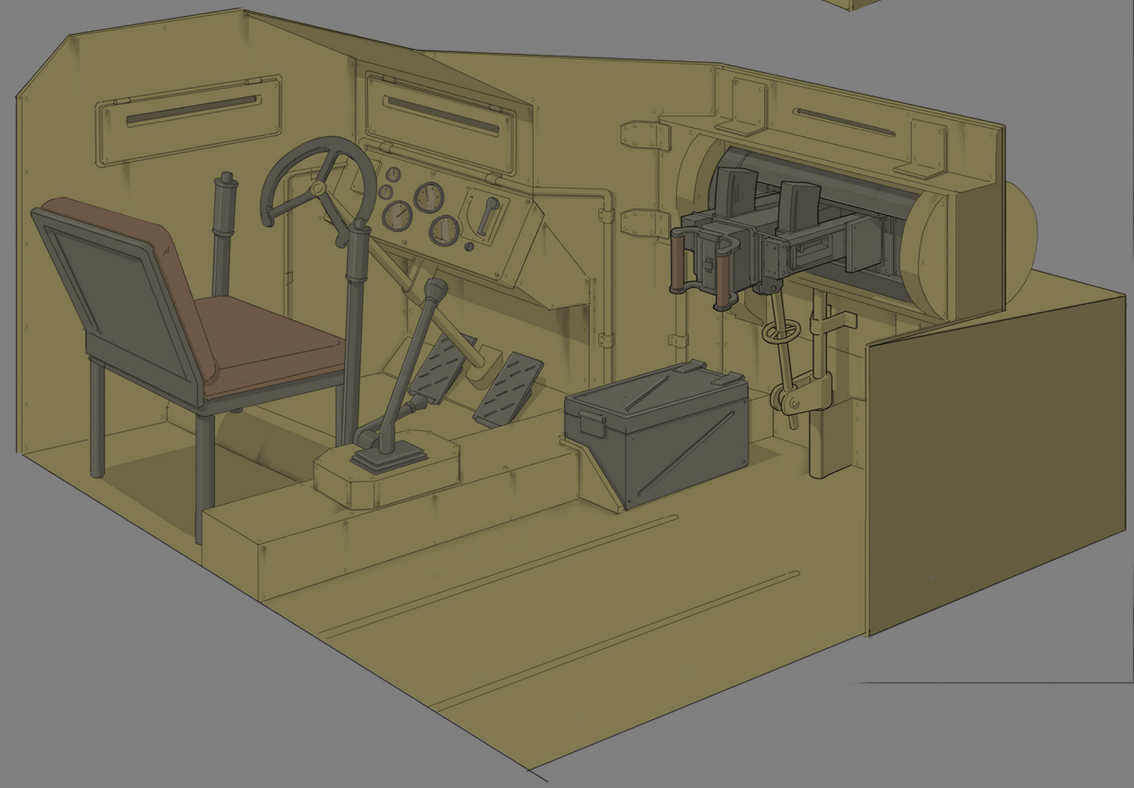

## Colonial Tankette

The Colonial Tankette was the first vehicle designed from the ground up with an interior. At the time, it was not sure how much detail was needed for the interior concepts, and we might have overdone it a little. It was originally pitched as a faster vehicle, but this was changed by game design when implemented.

*Unused Variant*

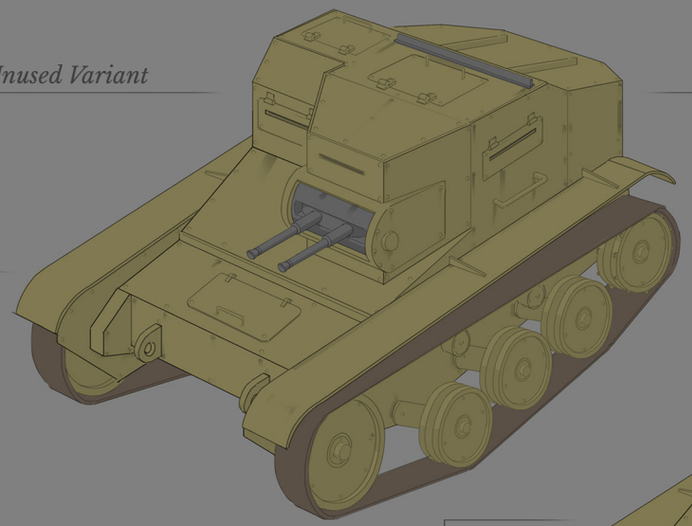

*T20 Ixion*

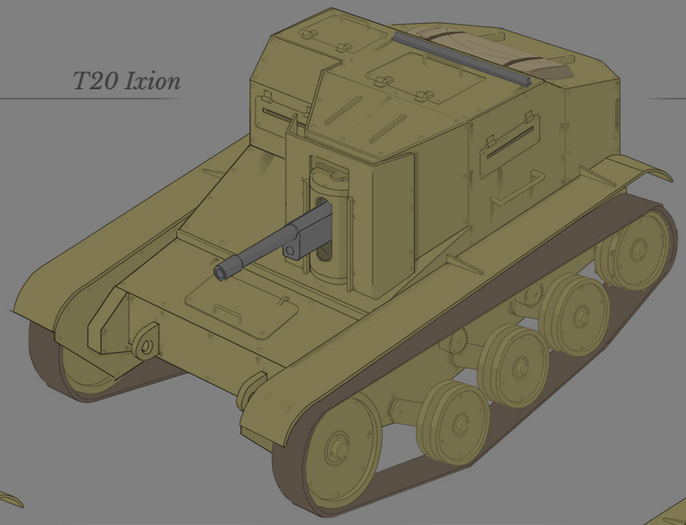

*A few open topped designs were tried for the Ixions 30mm cannon*

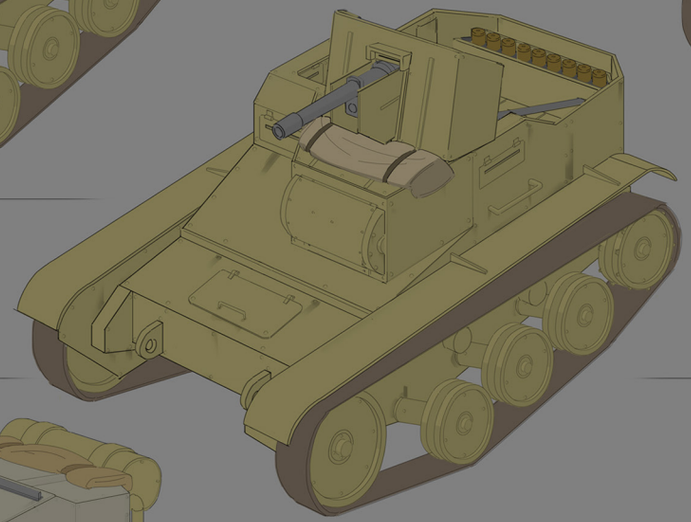

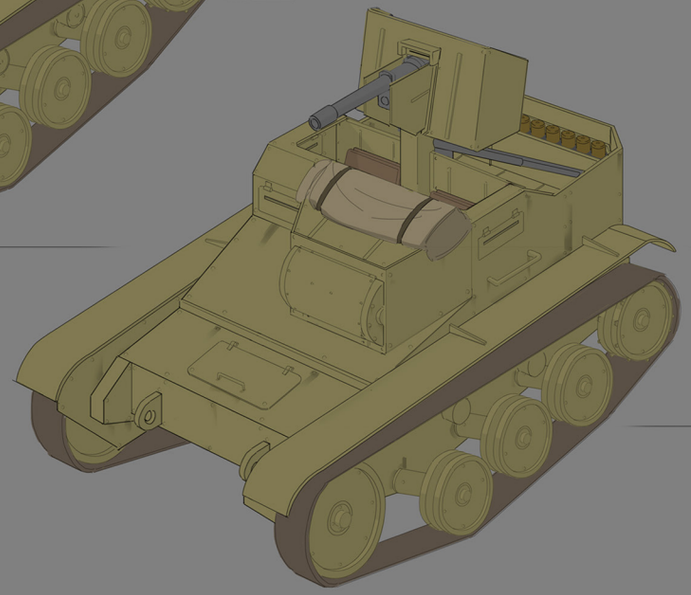

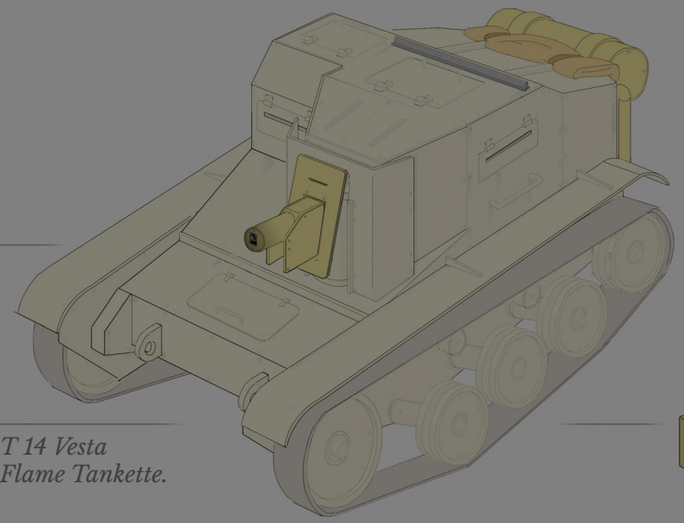

*T 14 Vesta Flame Tankette.*

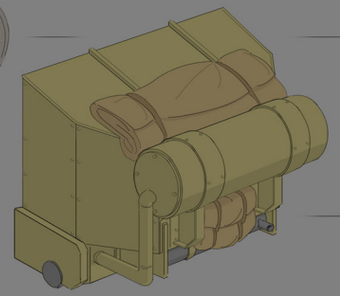

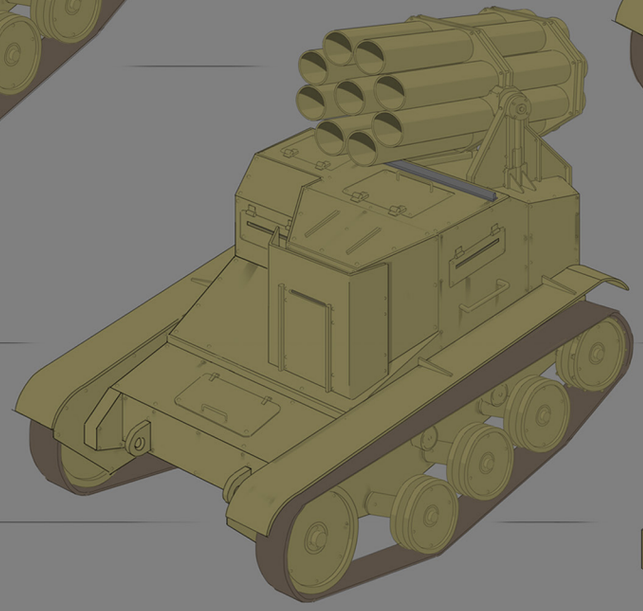

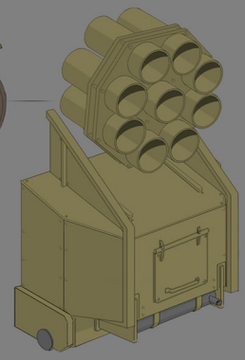

The *T13 Deioneus* was designed to give colonials access to the fire bomb rocket artillery.

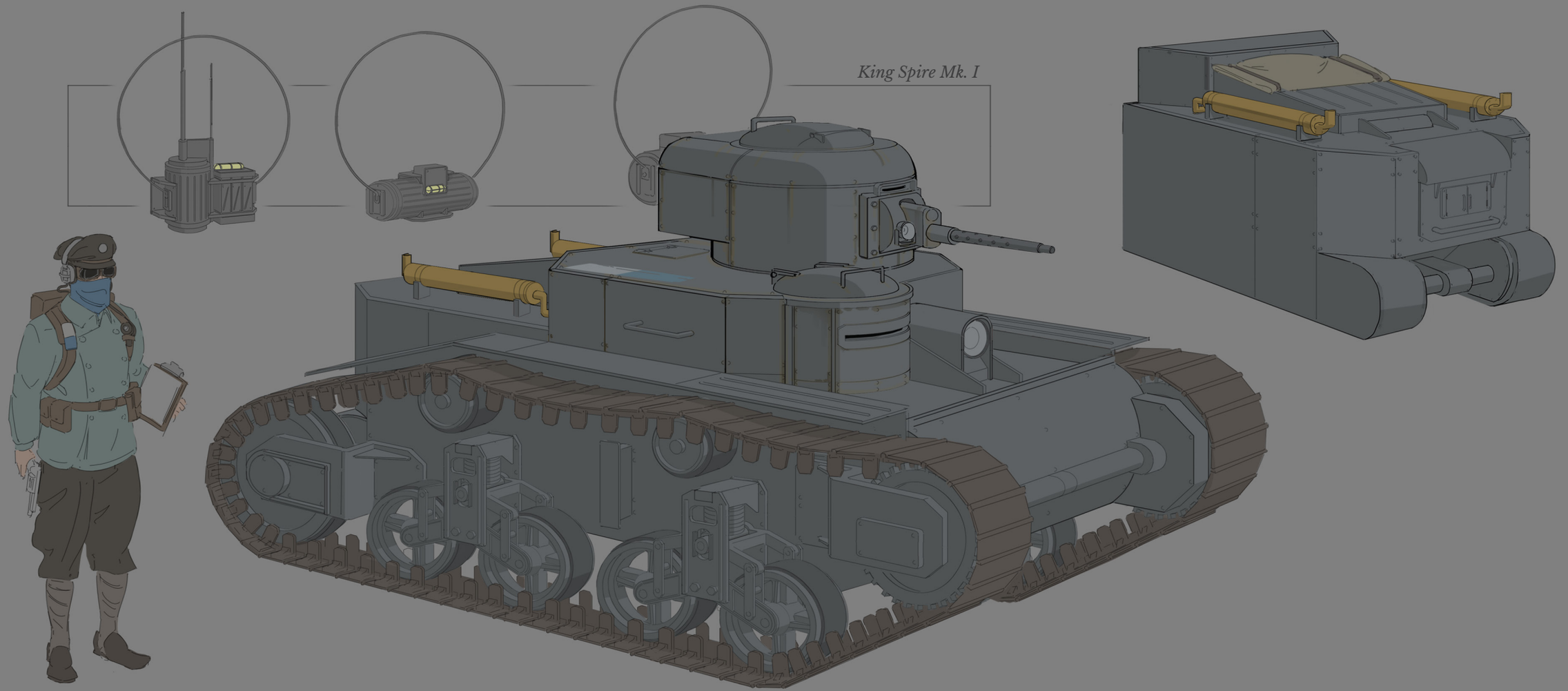


A quick scale model sketch later became the look of the Warden tank crewmen uniform.

## Warden Scout Tank

The idea for the King Spire scout tank originated with the thought to design the ugliest Warden tank. The idea was that it was an older Warden chassis that was used as a test bed for what would become Warden tank design doctrine. It was meant to look small, cramped, out of date and something even the Wardens would not like, but war necessitated its use. The inclusion of the radio antenna and the radio functions of the LUV's completed the look.

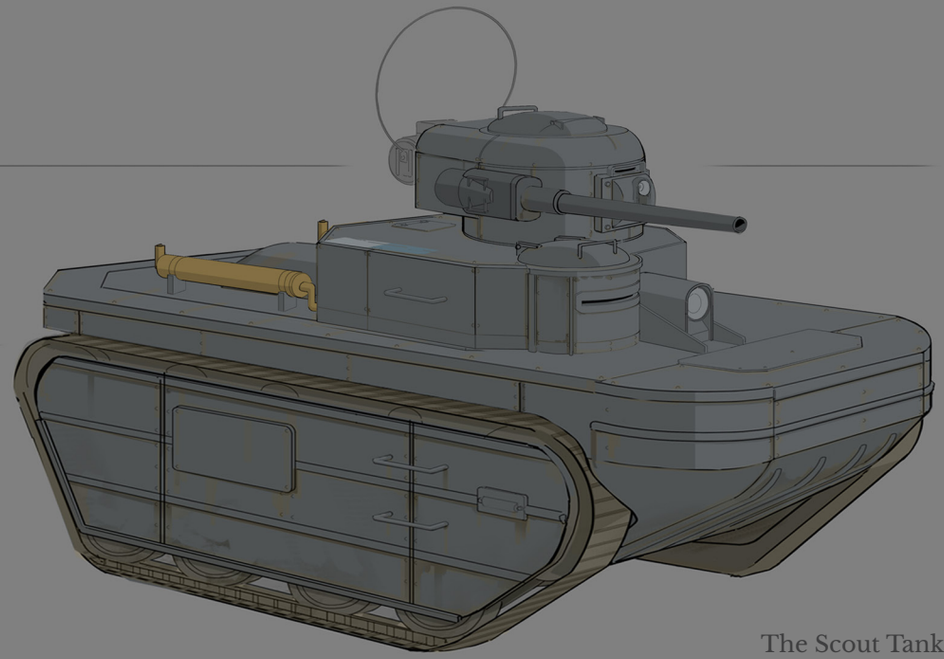

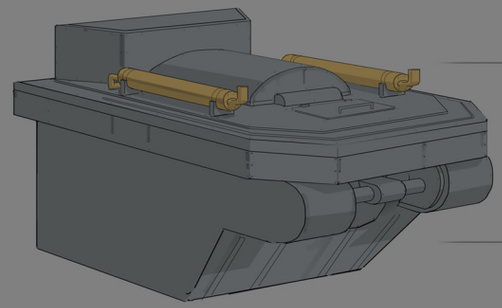

*Unused Amphibious Variant: there was an attempt to gauge the interest in trying Amphibious vehicles a few years after the LAPC's.*

*King Gallant Mk. II*

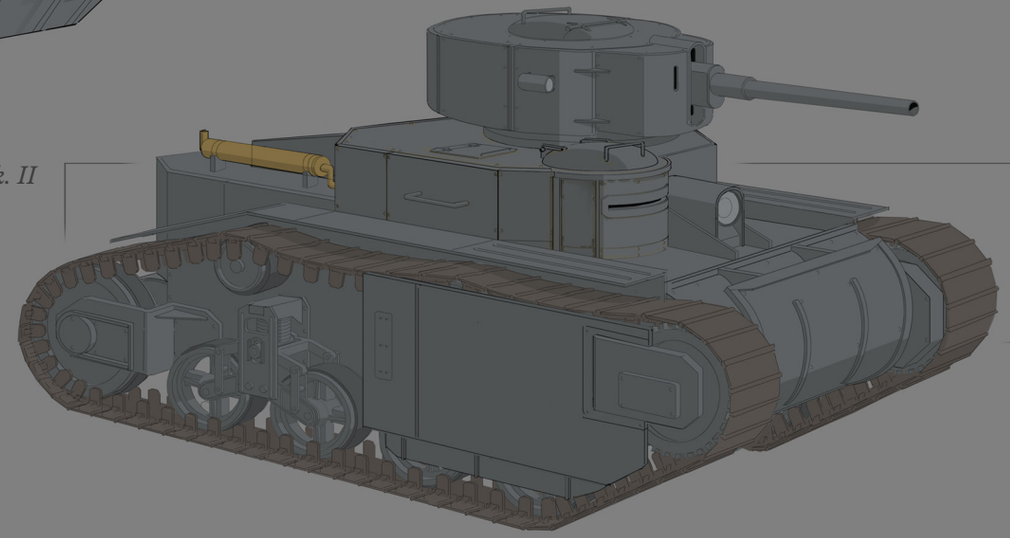

The Scout Tank line up is meant to give the impression that the Wardens use it as a test bed prototype for other vehicles.

*King Jester Mk. I-1*

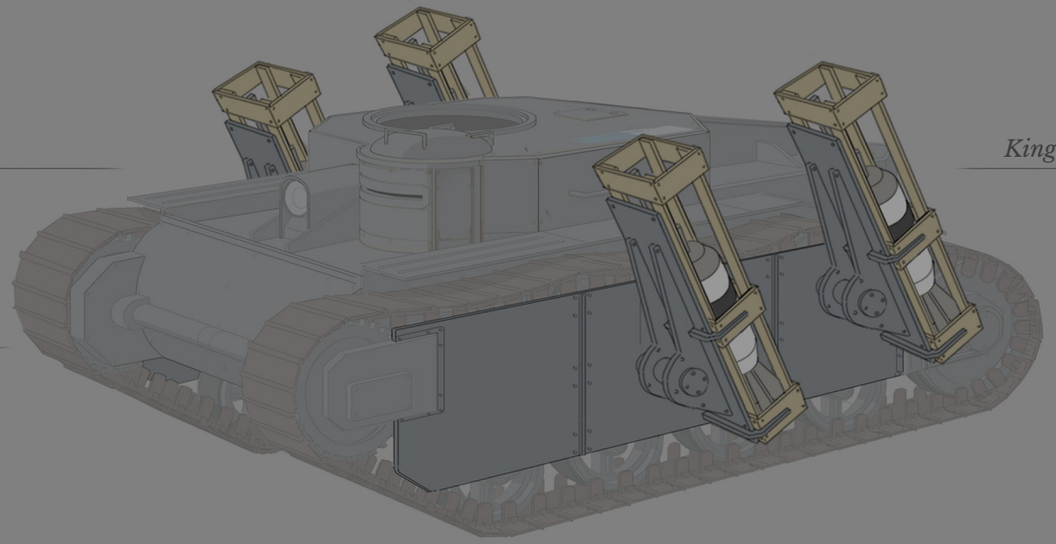

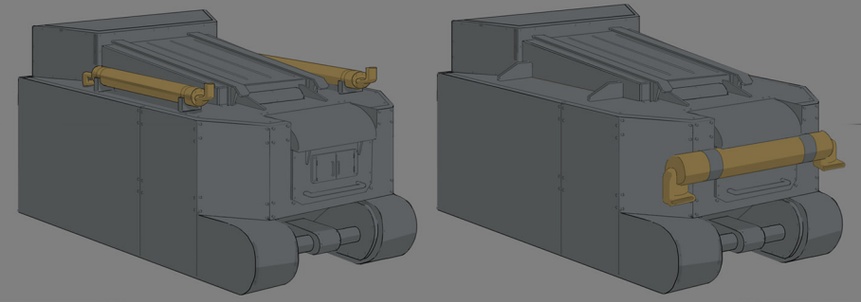

*Lance-36*

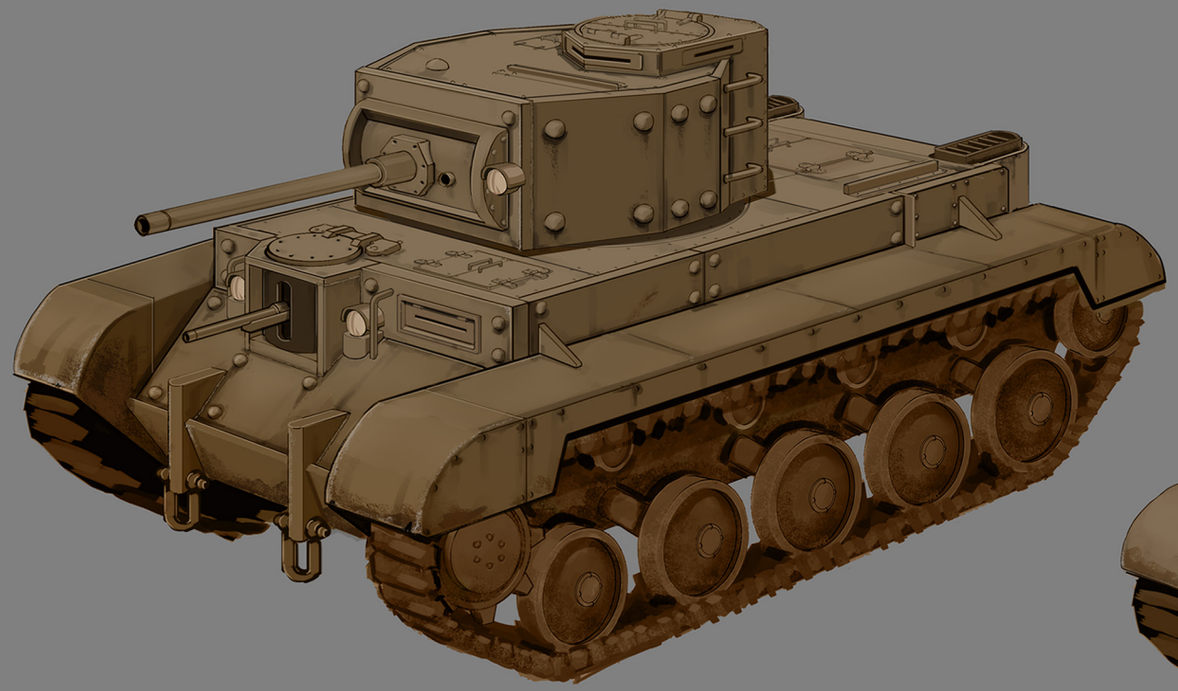

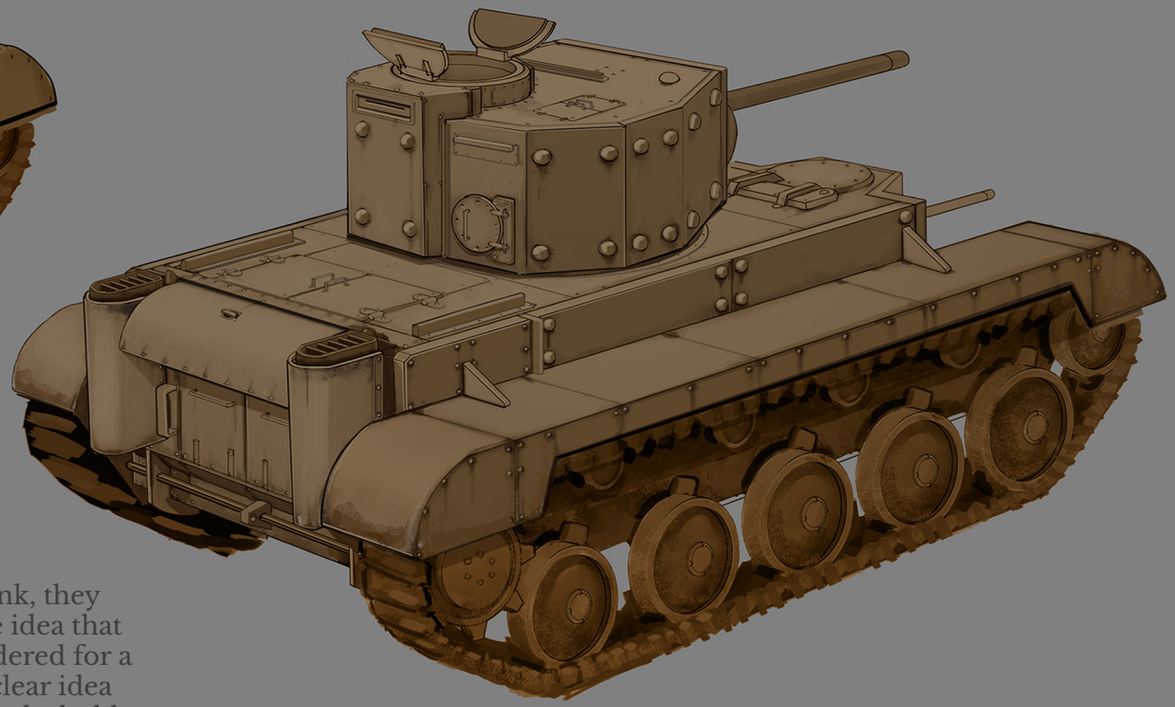

## Colonial Battle Tank

In 2018 the battle tanks were the second class of tank developed. A large jump from the light tank, they were originally considered medium tanks. Part of the original pitch for the game world was the idea that technology didn't advance, but armour got thicker and guns bigger. This idea was later reconsidered for a more grounded universe, more analog to the 1920's - 1940's. From the beginning, Mark had a clear idea what he wanted for the Colonials; a more modern 1940's look with heavy slabs of armour and bolts holding everything together. The Lance -36 captured his vision and started a lot of the visual language for the faction's vehicles.

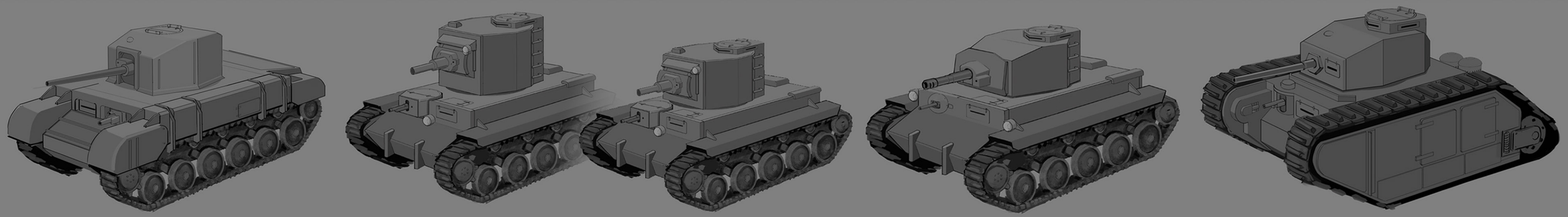

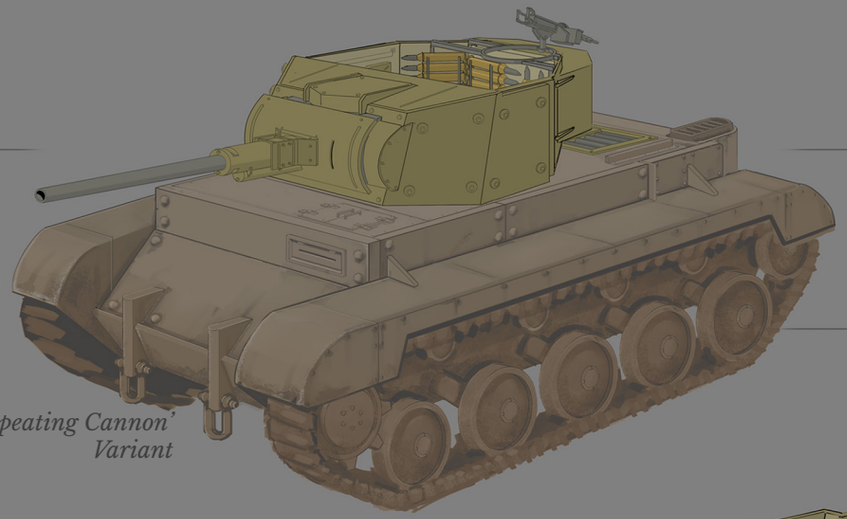

*Unused 'Repeating Cannon' Variant*

*Removed Lance-40 Halberd*

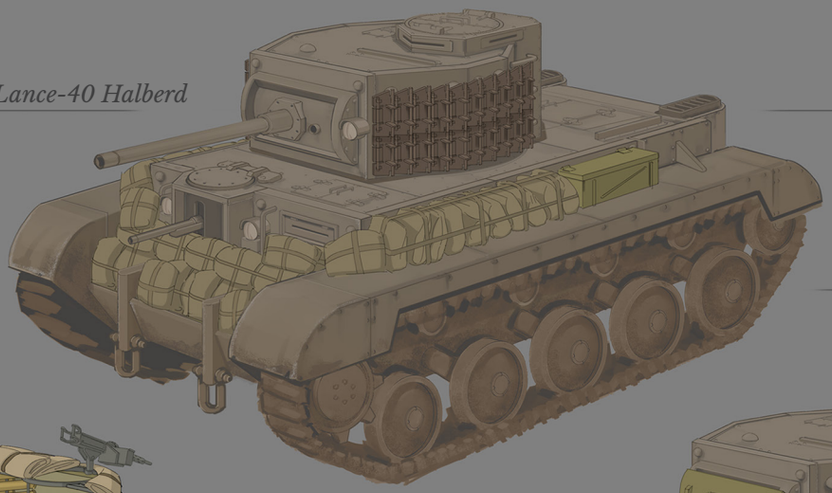

Battle Tanks and their variants were removed from the game at one point to rebalance gameplay. It was clear that we could not properly introduce the medium tanks while the battle tanks were skewing the meta.

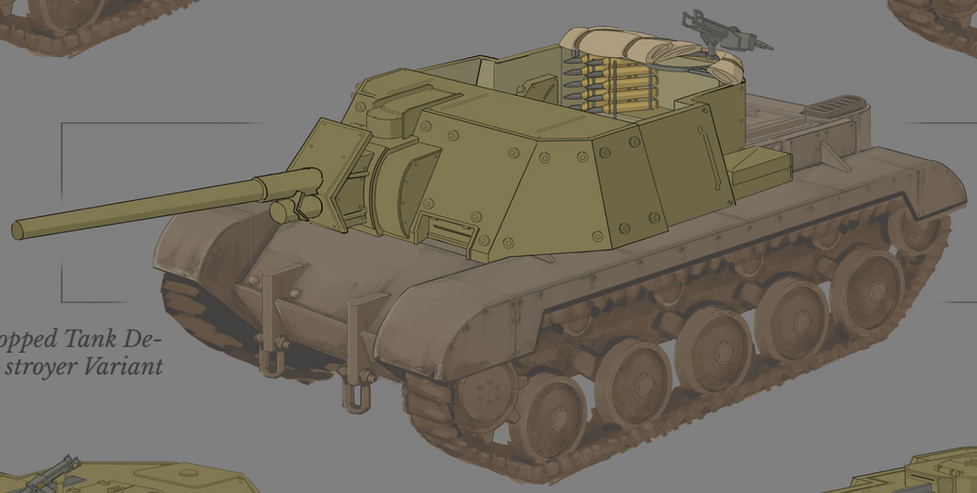

*Unused Open Topped Tank Destroyer Variant*

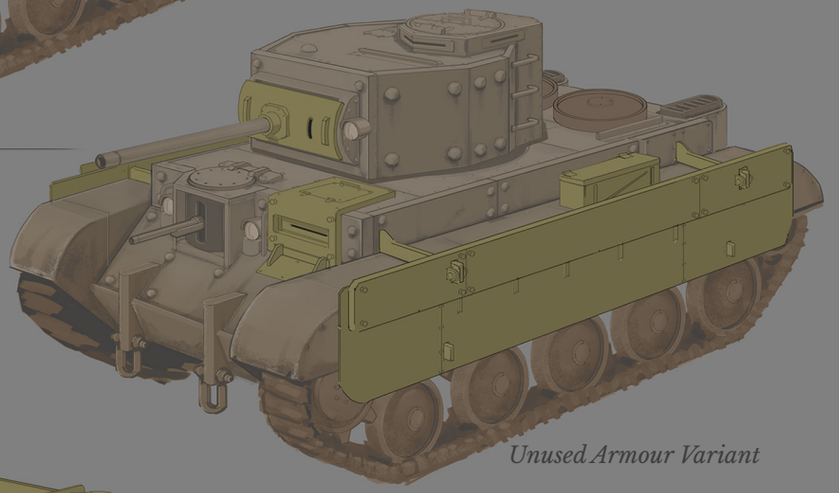

*Unused Armour Variant*

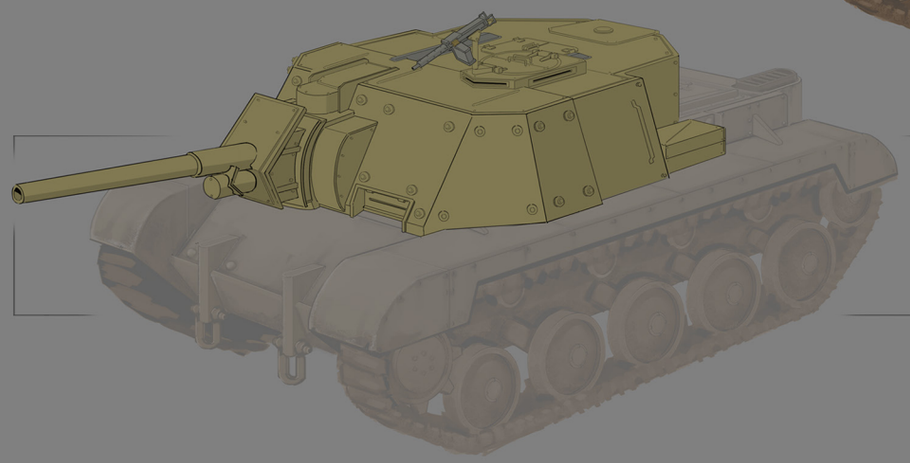

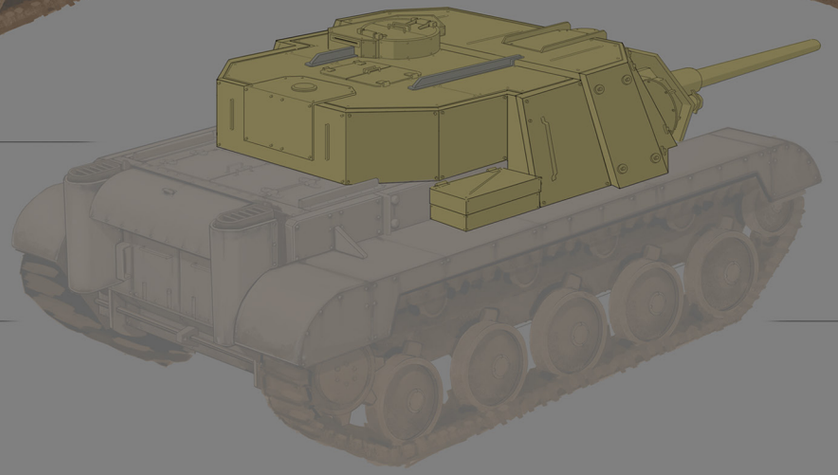

*Lance-25 Hasta.*
At the time the concept was made, there was no tech to support the commander MG and it was removed.

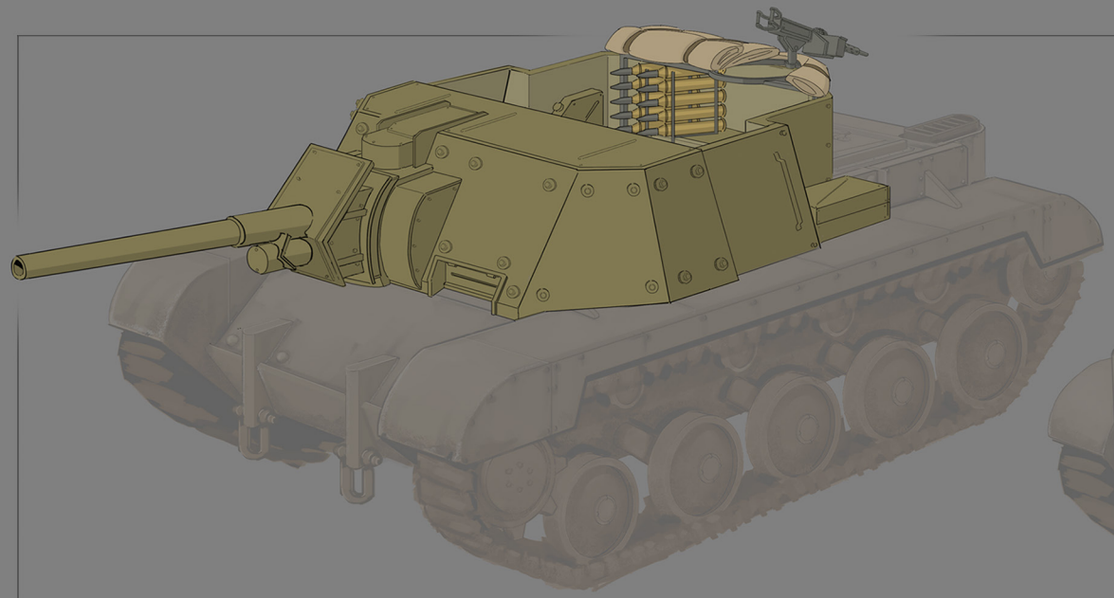

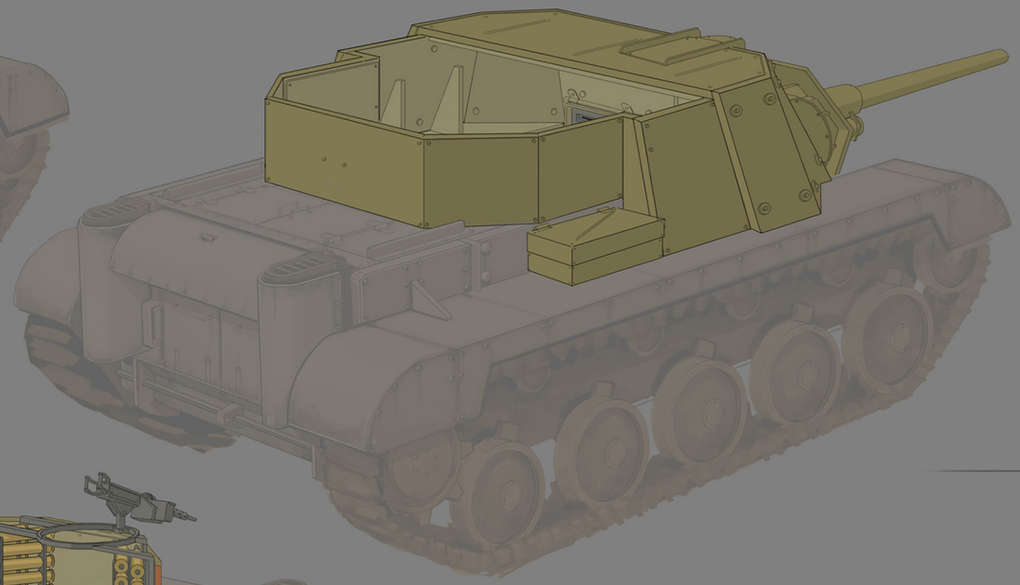

The original outline for the Lance-25 Hasta was an open topped battle Tank. Full concepts were developed. An internal debate raged about the players' perception of the tanks' cost and ease to de-crew.

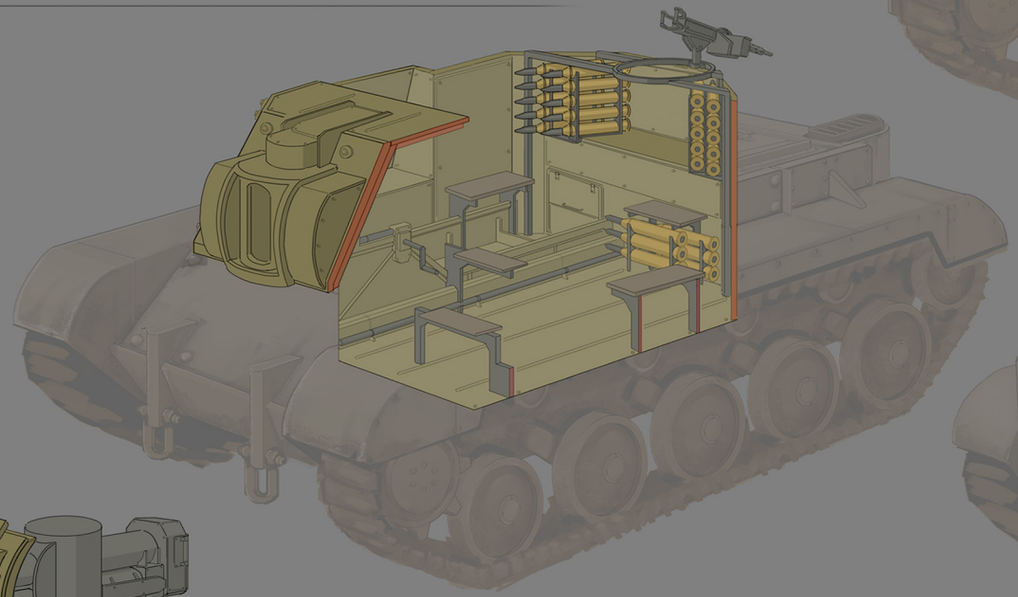

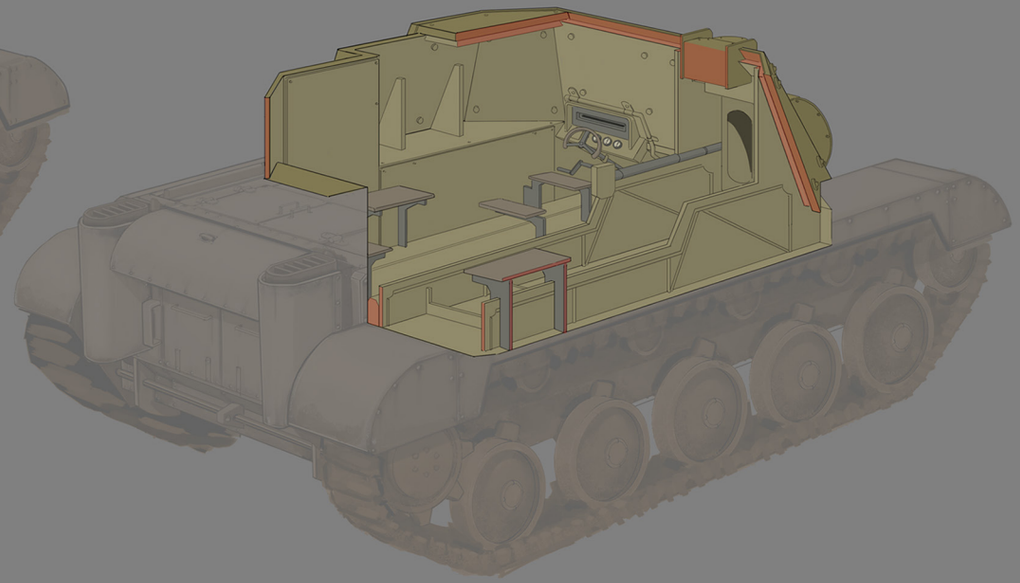

Since the start the game designers really value seeing the player models inside vehicles, but eventually we were allowed to put a roof on the final version. The enclosed Hasta is an excellent addition to the Colonial line.

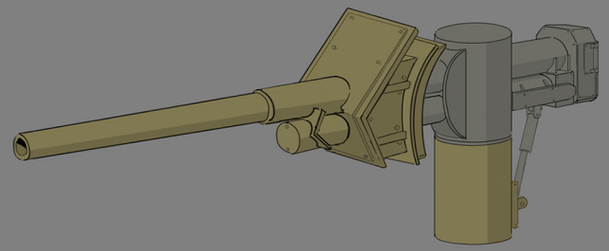

*Flood Mk. I*

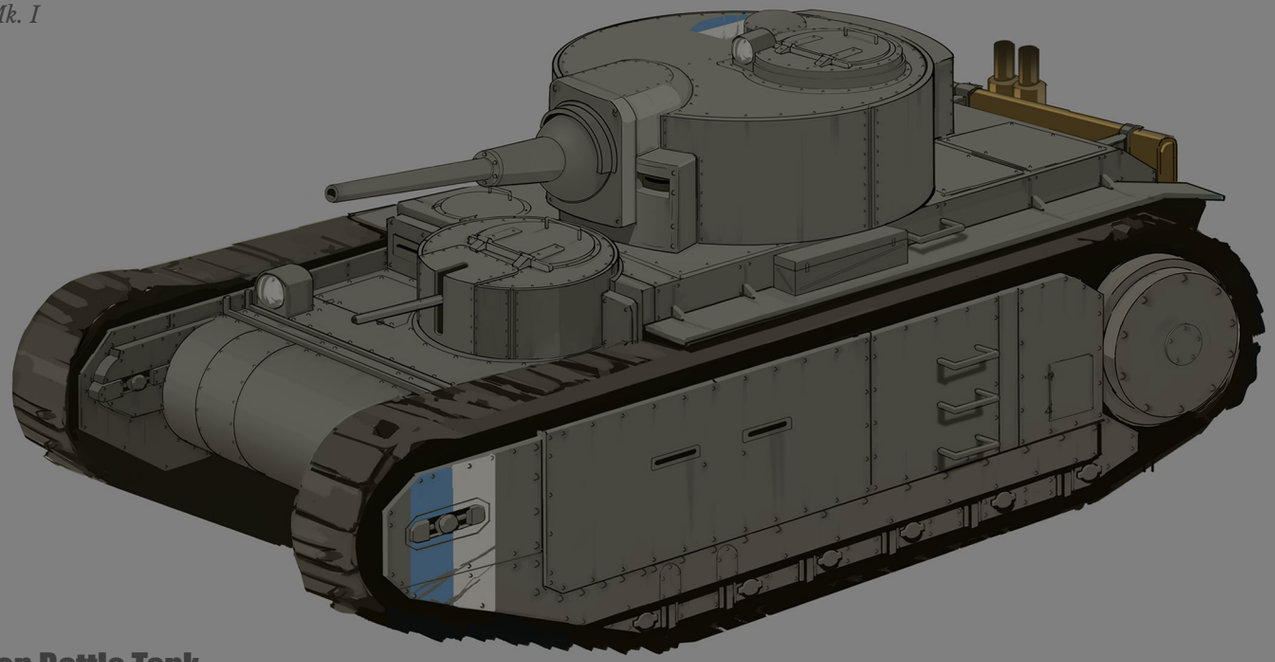

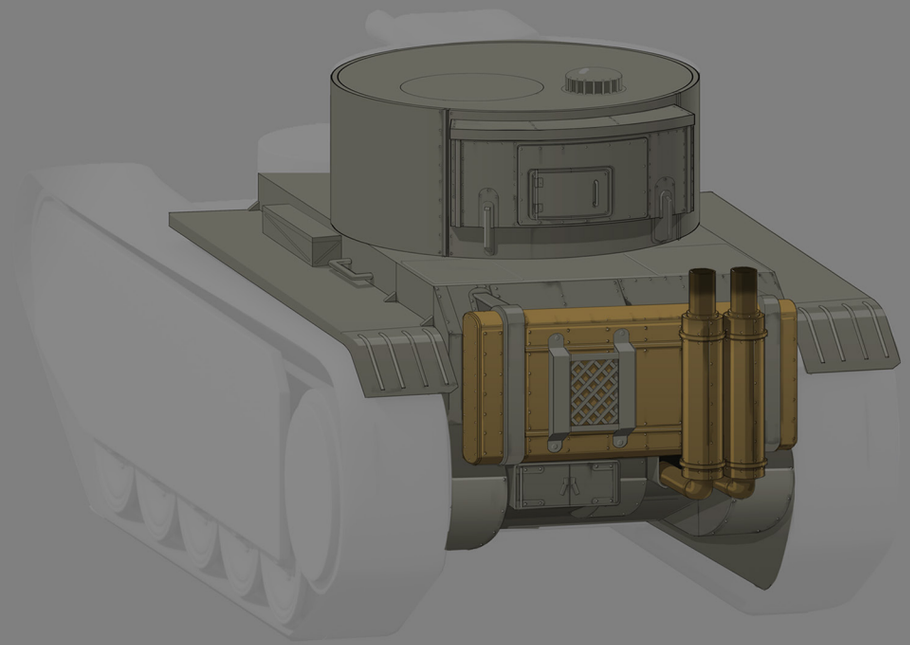

## Warden Battle Tank

Designed alongside the Colonial battle tank, the Warden battle tank was harder to nail down. The Flood Mk. 1 was inspired by a combination of French ARL 44, Char B and a photo of a prototype Tiger with its turret backwards. A few major design choices came from counter picking what made up the Colonial tank. Exposed heavy tread instead of the covered tread, more negative space in the front and back, and the now iconic large exhaust were all designed to make it visibly different at a glance. The tank was also originally envisioned to be thinner, but in the block in phase, and with faction symmetry at the time, there was a concern it looked weaker than the Colonial version, so the tank was widened.

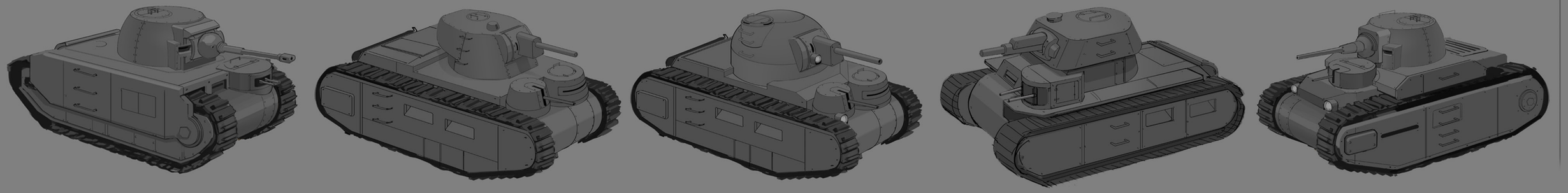

*Unused Commander Mini Turret Variant*

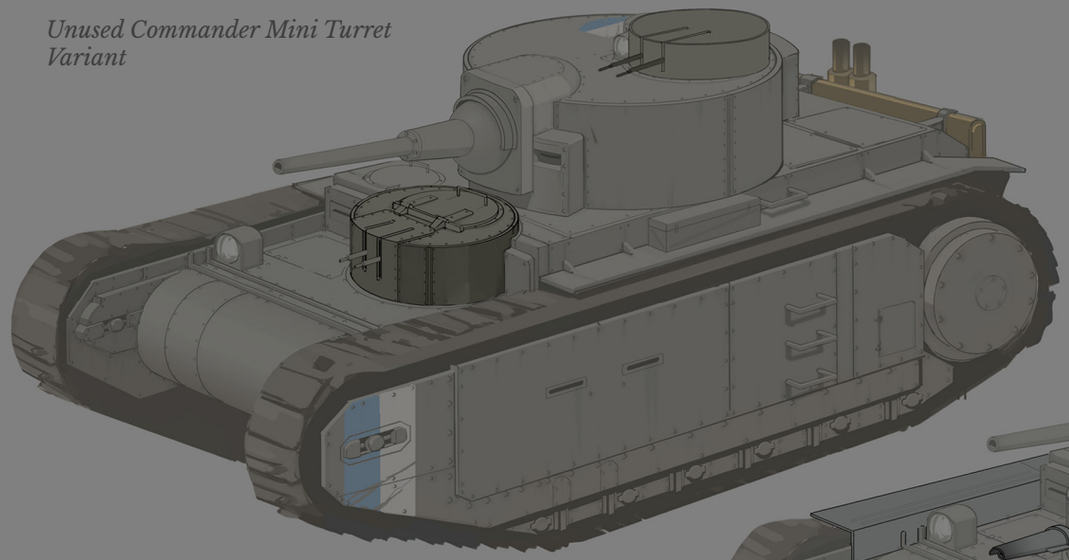

Early lore for the battle tanks played on the idea that they were pretty symmetrical and implied the creator of the Flood stole designs from the Colonials.

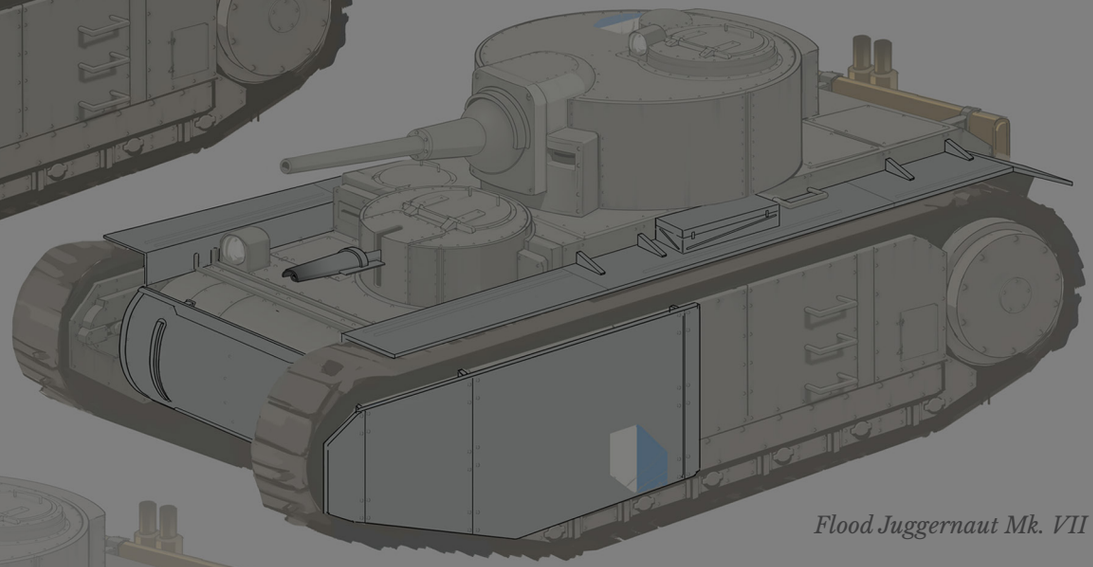

*Flood Juggernaut Mk. VII*

*Removed Flood Ascension Mk. V*

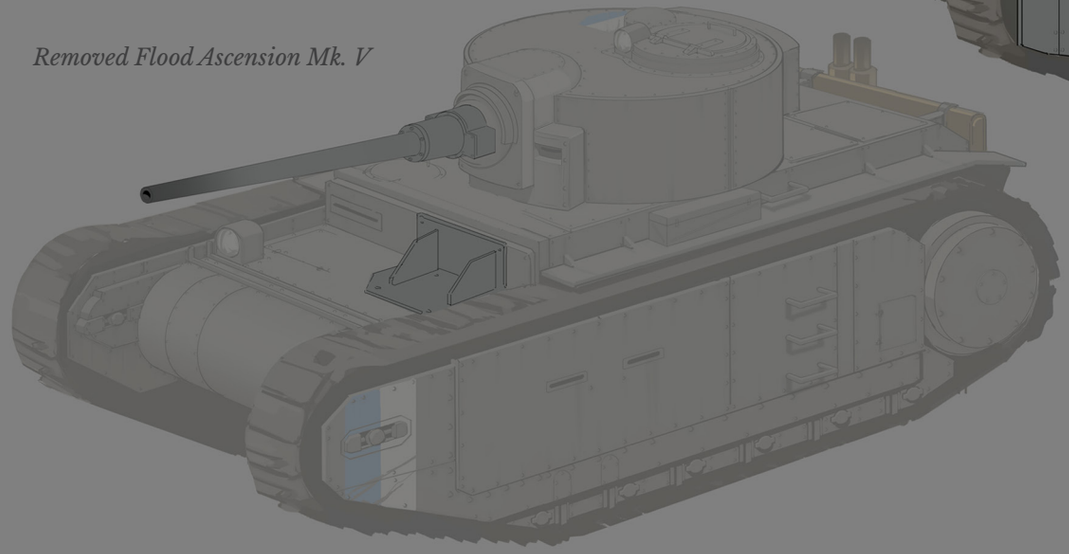

The longer barrel and range of the Flood Ascension proved to be an issue for gameplay balance. The variant was planned to have its front gun removed, but it was simpler to leave it on at the time.

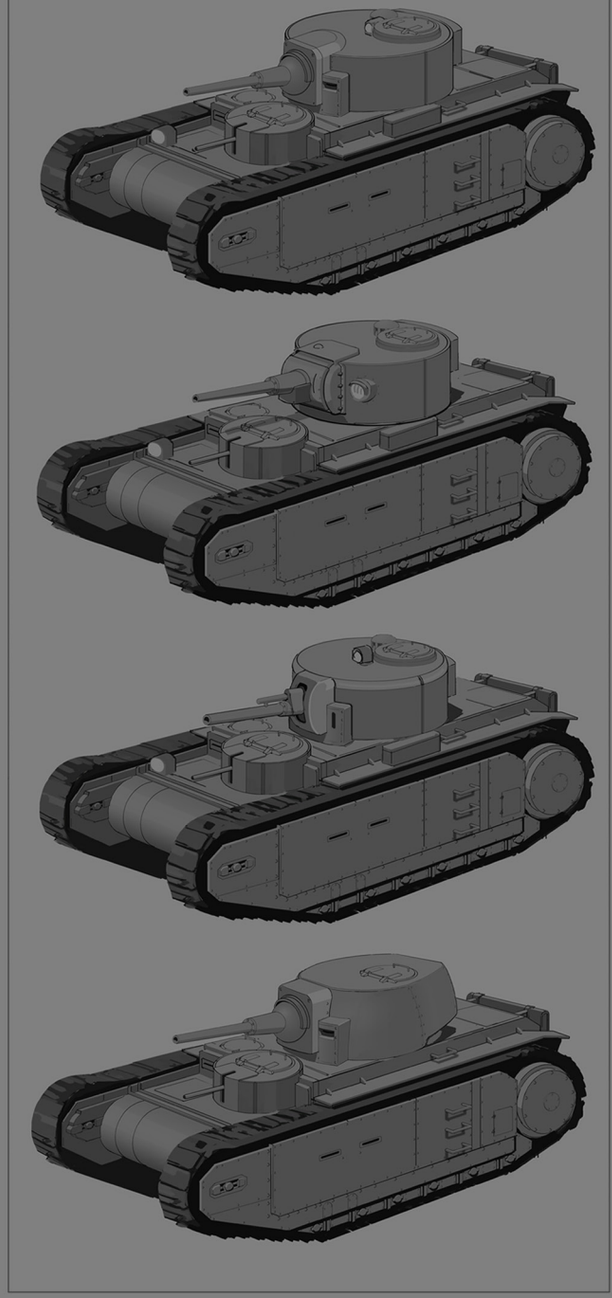

*Lance-46 Sarissa*

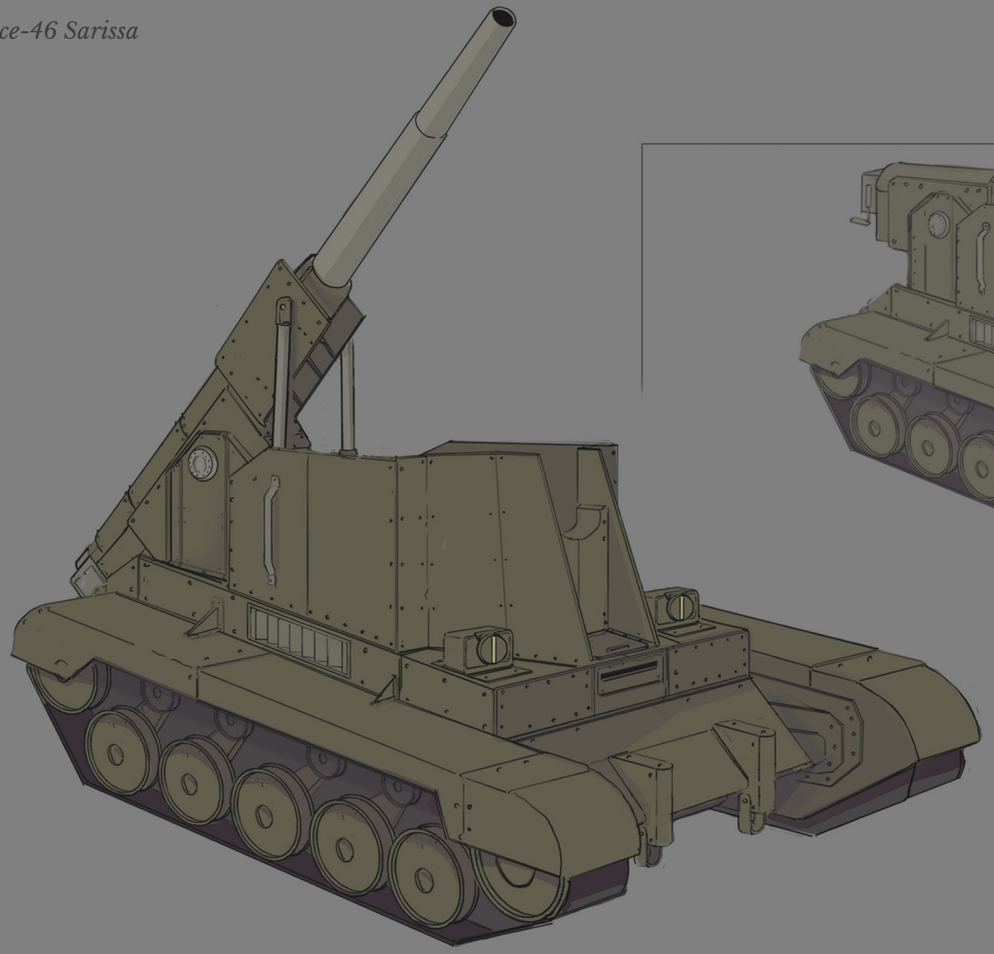

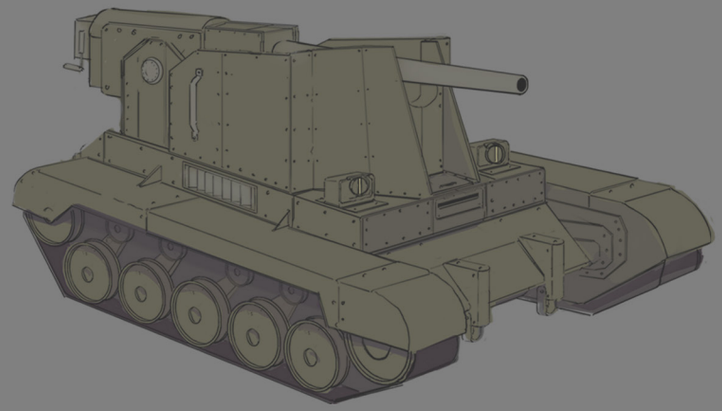

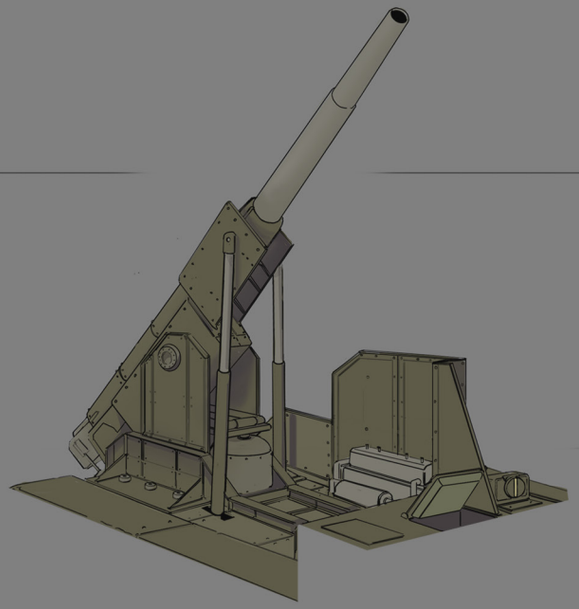

## Colonial Mobile Artillery

Mobile artillery was a matter of when, not if. There was a perceived issue of how it would affect the artillery meta. We wanted to get the emplaced artillery gameplay loop down before we considered what the mobile artillery would be. Six years into the project, we hired our second concept artist, Luke, and his first assignment, his 'trial by fire', was the mobile artillery. The visual challenge was to match the feel of the factions while bringing something new. The Lance-46 Sarissa took on a life of its own when it started to look like a piece of heavy construction machinery, a tool for the Colonials.

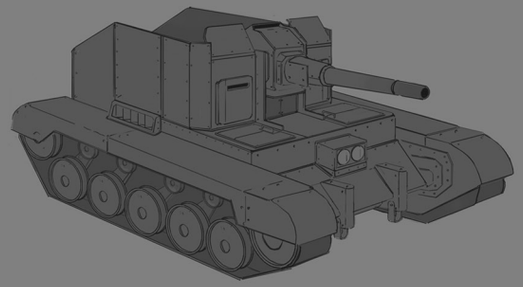

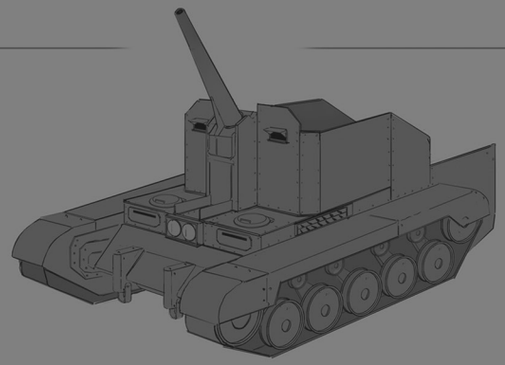

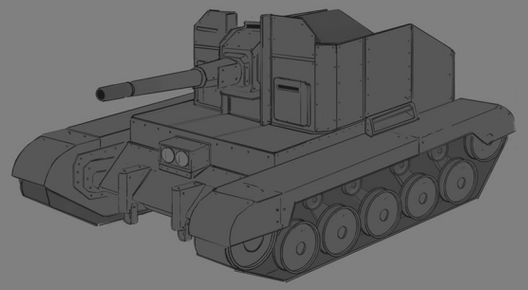

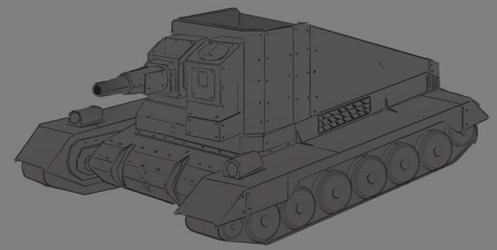

*Flood Mk. IX Stain*

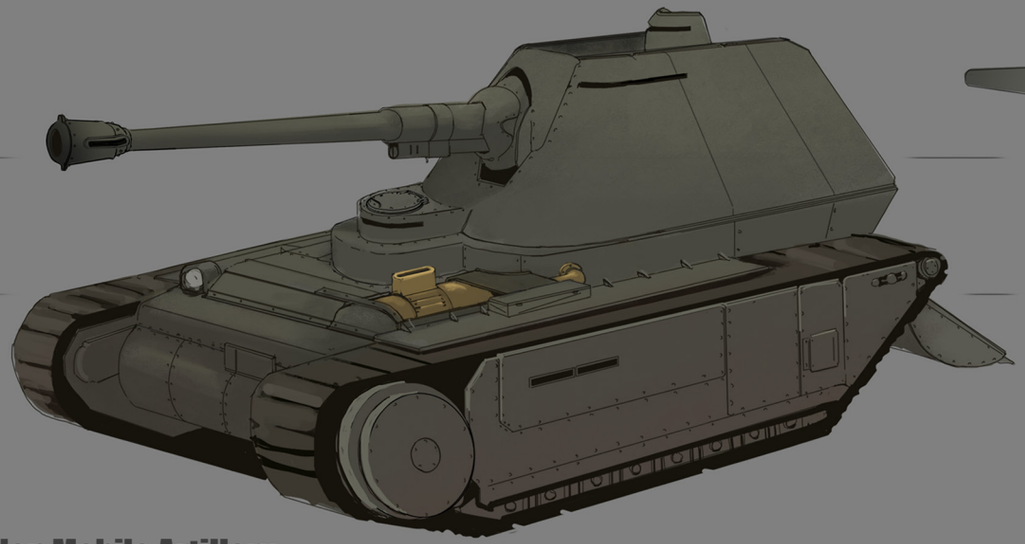

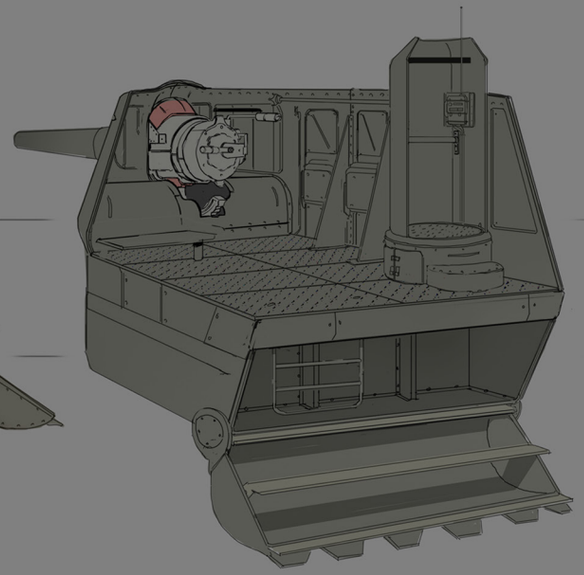

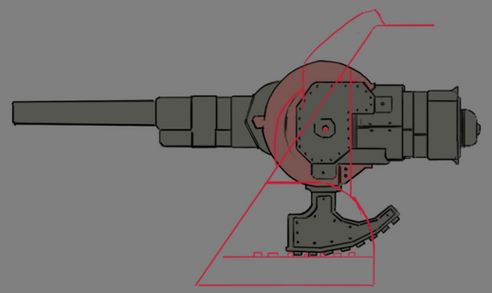

## Warden Mobile Artillery

The Flood Mk. IX Stain captured the refined engineering and pompous attitude of the Wardens, while not looking like a clear variant of the Flood line. It has its own personality. It also was inspired by the Colonials' backwards facing Pelekys, a fun nod to the lore of the stolen battle tank design.

A heavy mortar design was considered for a while to make the two faction approach to mobile artillery visually further apart.

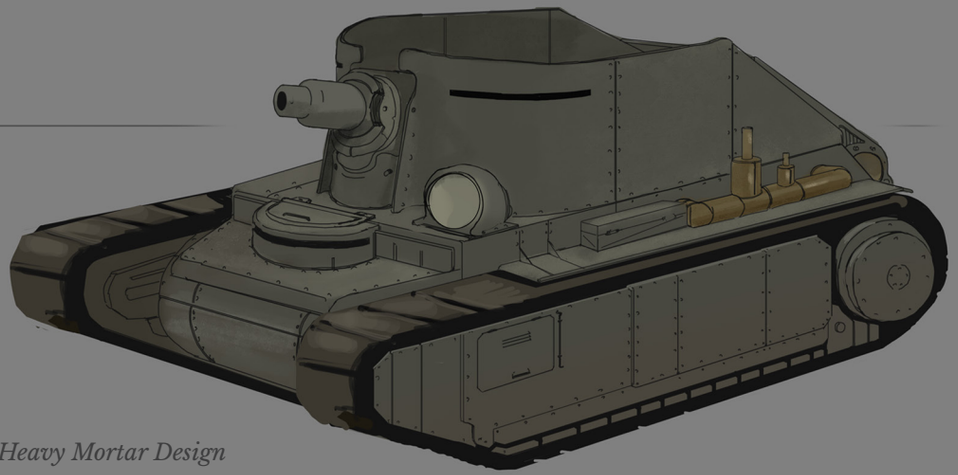

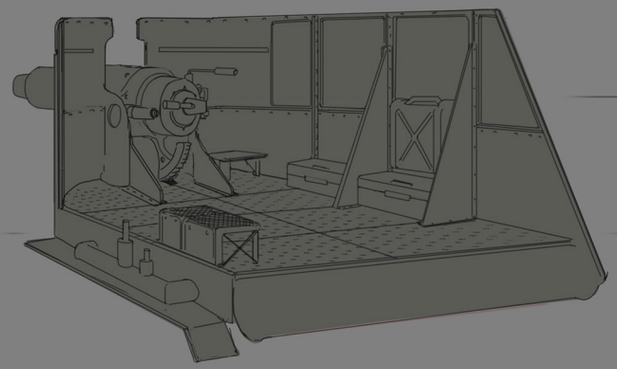

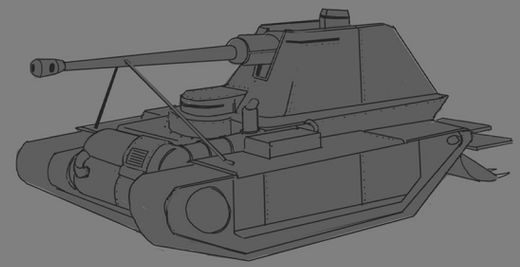

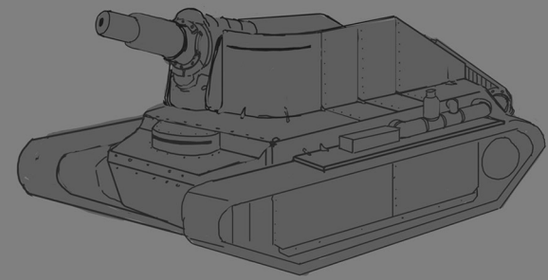

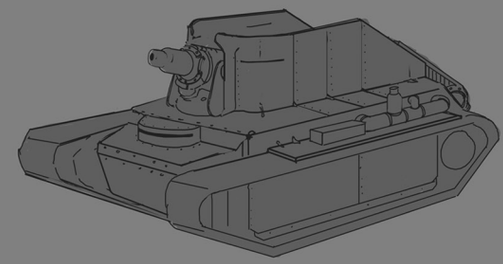

*Unused Heavy Mortar Design*

*Storm Tank*

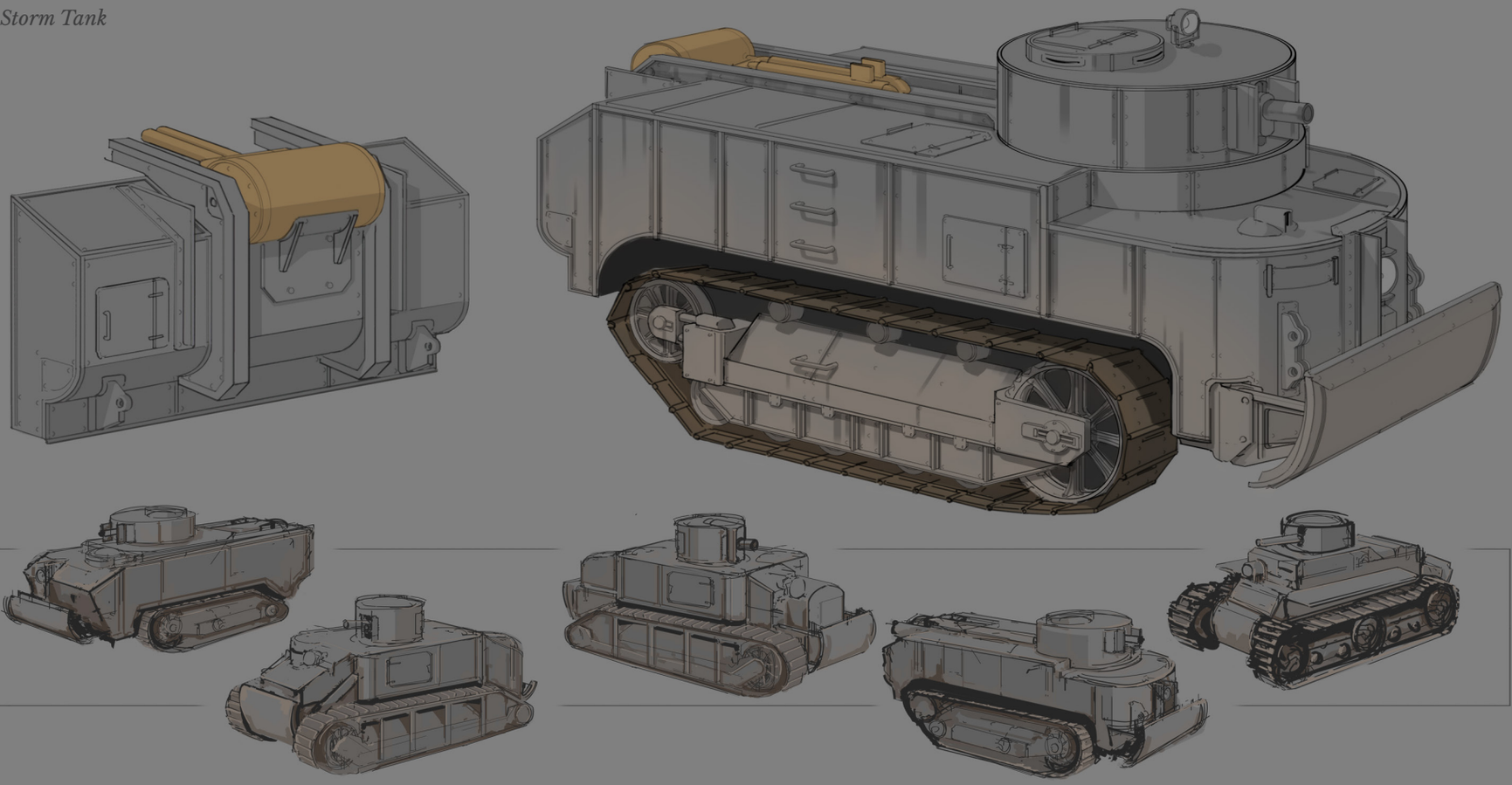

## Relic Tanks

In the game lore there was a war before the current one, The Great War. It was fought at a much larger scale and caused the state of the current landscape the players are fighting over. Relic vehicles were our exploration of that, players finding and bringing back into service the relics of a previous war.

The gameplay for relic vehicles has changed a few times over the years, but the visuals have always been a fun way to explore analogs to the original tanks of World War One. When we added the relic truck and relic car, no concepts were ever made. At the time, it was a visual exploration for one of the modelers.



*Armoured Fighting Tractor*

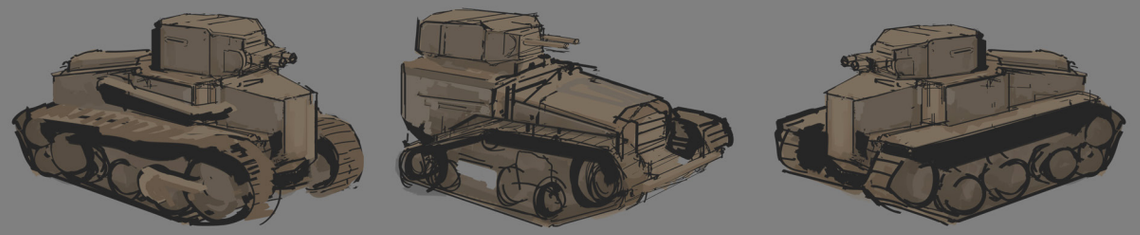

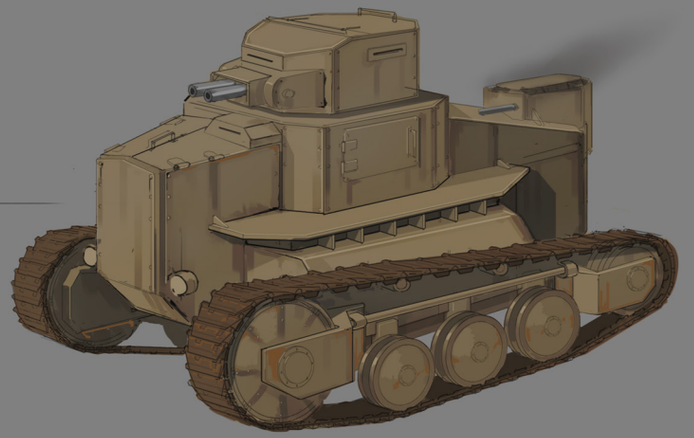

## Relic Tanks

Visual exploration of all the early ideas was a fun break from the normal roster of tanks. Tracked rail cars and mobile gun carriers later influenced the combat cars for trains in the Inferno update.

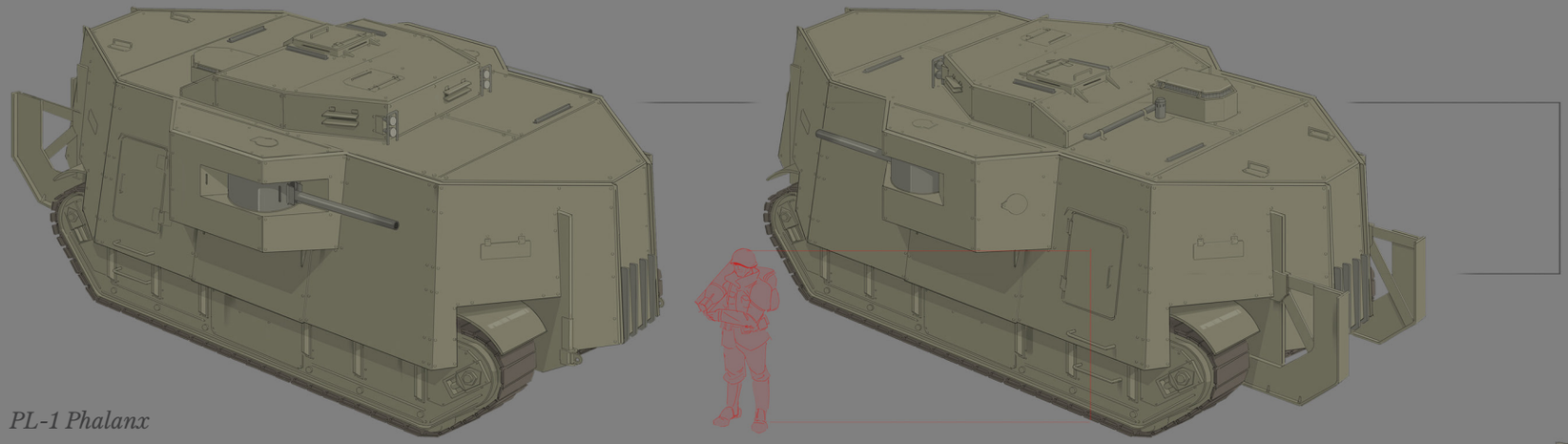

*PL-1 Phalanx*

As the game's world expands, the idea to add unique elements to more maps created a large Colonial relic boat stuck in the ice. We went back to some sketches to add into the roster of relic tanks to expand the game's visual storytelling. The result was this unnamed relic battle tank.

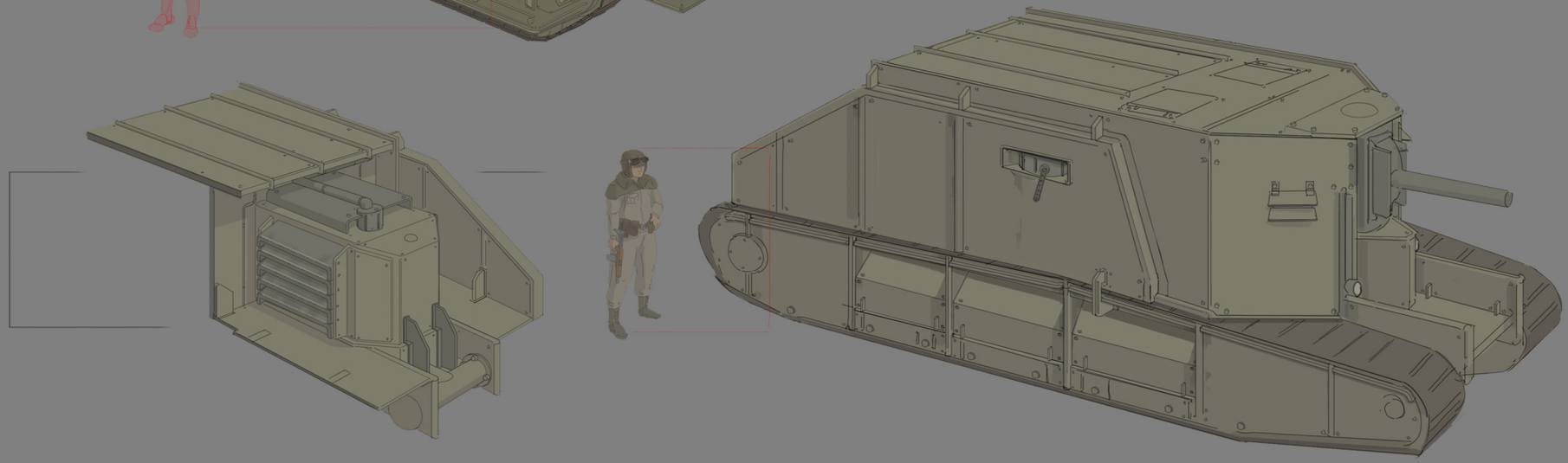

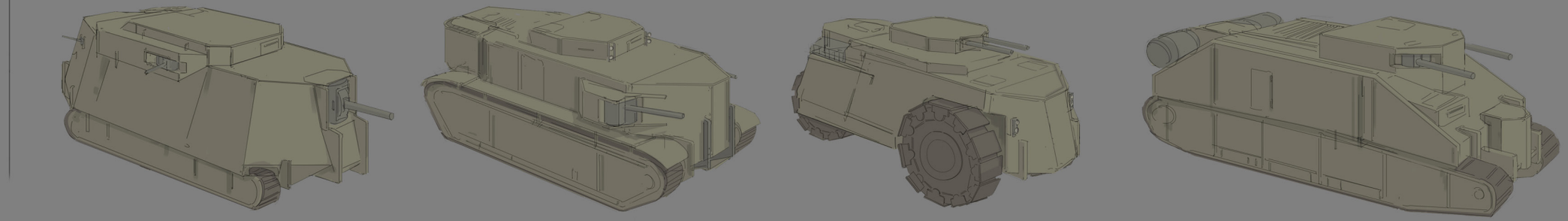

## Relic APC

As the idea for relic vehicles developed we wanted to explore how the Colonials of the past could advance on and take the Bulwark wall. The Heavy Infantry Carrier was their way to move mass infantry while under fire from the cannons of the wall. We envisioned them advancing through no man's land in the dozens.

With the Colonial theme that their war machines are trucks and tools that don't need to look pretty, the inspiration for the hull shape came from a Whippet tank, with the scale and tread of a British Mk 1, creating a look like a mobile barn.

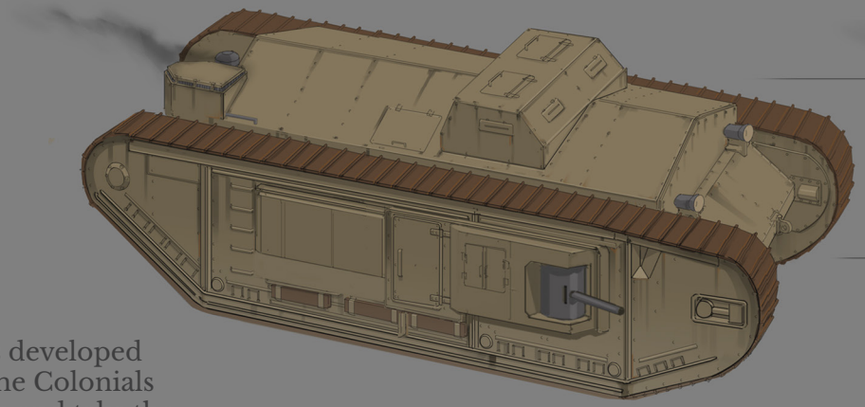

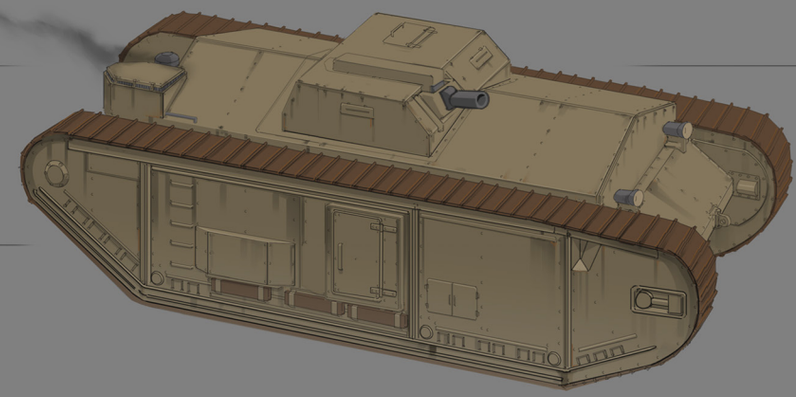

*Heavy Infantry Carrier*

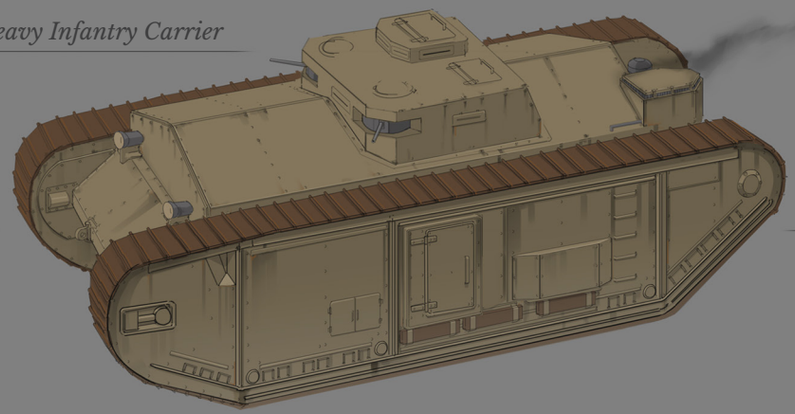

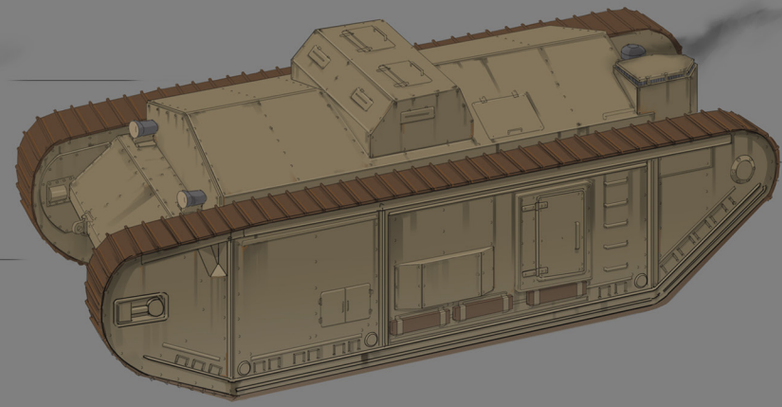

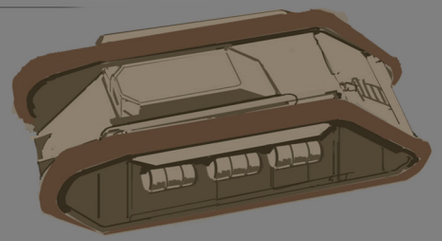

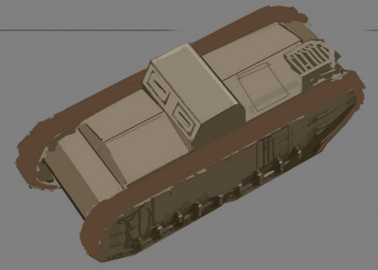

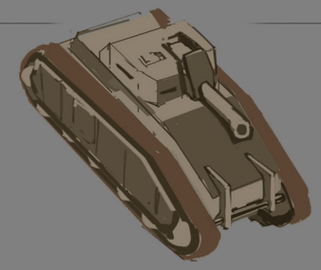

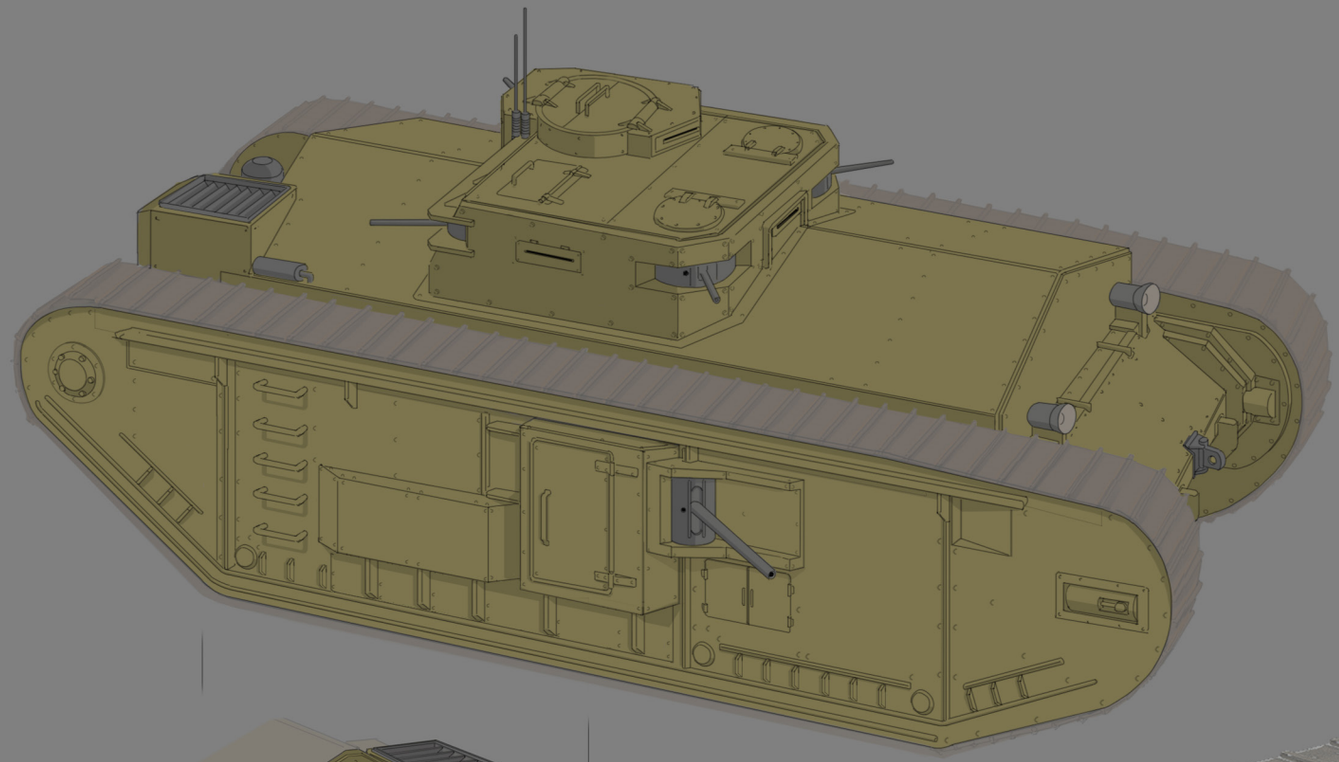

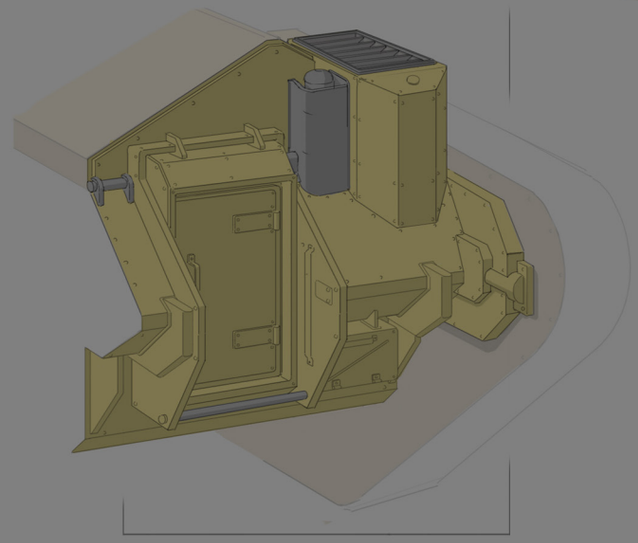

Around the same time the Ares was being developed, the visuals of the Heavy Infantry Carrier were overhauled. It was pitched as a mobile spawn point and intel center that you would then upgrade into an Ares super tank.

## Super Heavy APC

Since their first implementation, relic vehicles have taken a bit of a back seat, but interest in exploring the Heavy Infantry Carrier as a platform for vehicle variants has stayed. When super heavy tanks were being talked about, we revisited and updated the design of the APC. It was a hard sell to make something that game design could see players wanting to use as a variant or base vehicle.

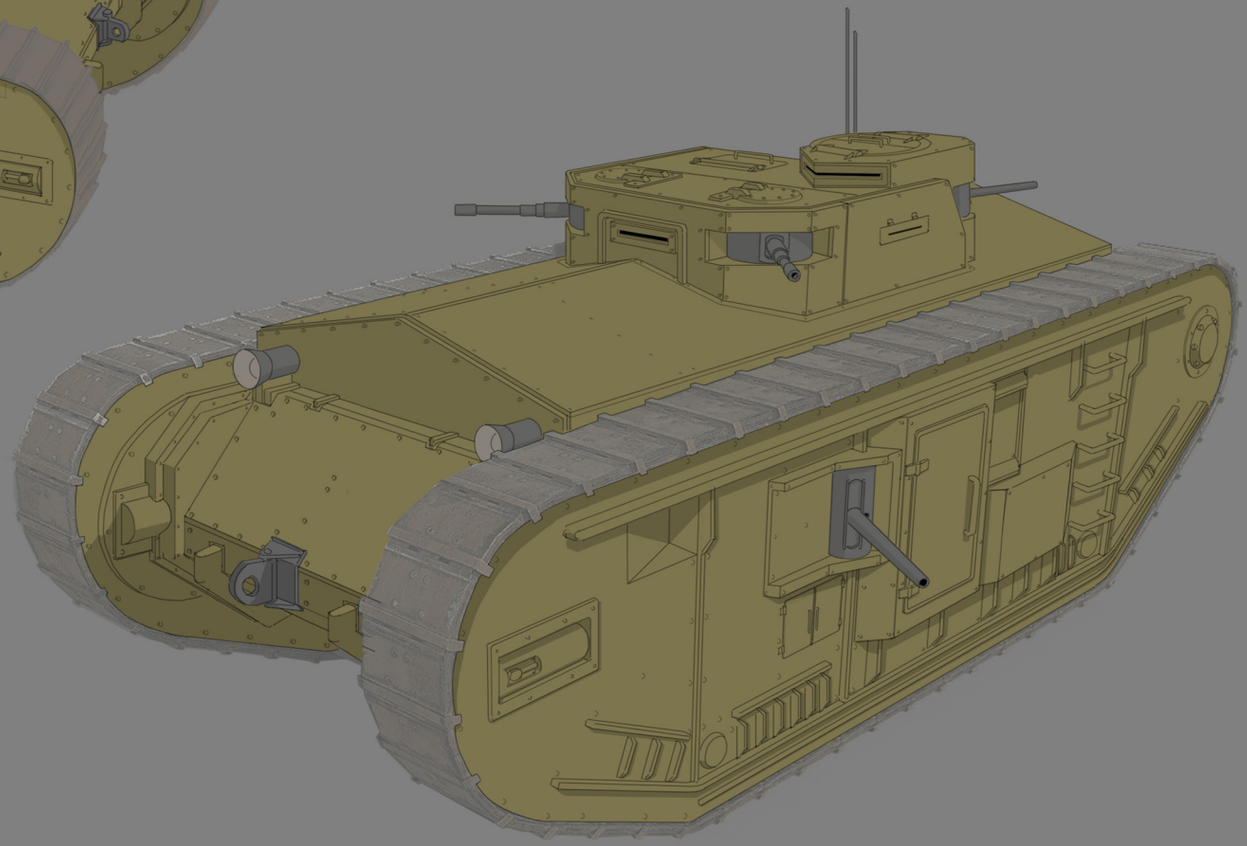

*0-75b Ares*

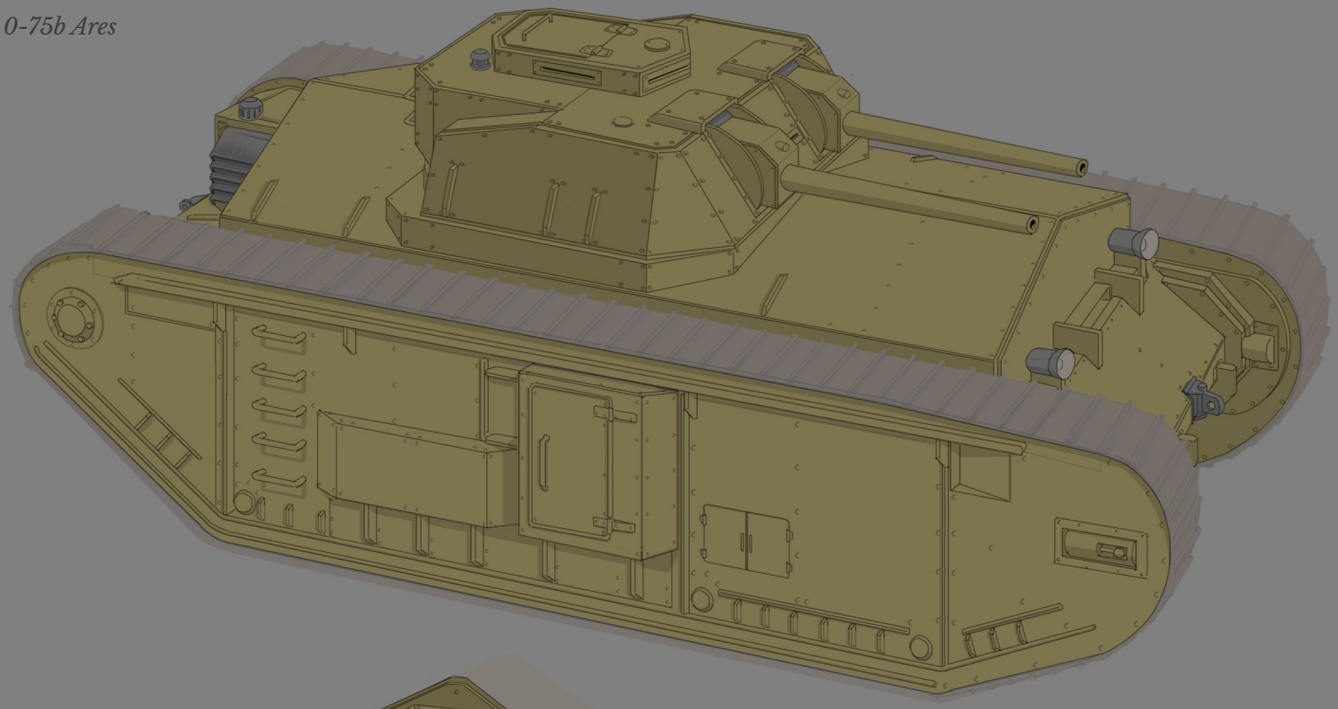

## Super Heavy Tank

The super tanks were developed for the Inferno update, a surprise for the end game vehicle combat. While developing the visuals and theming, we looked towards the factions doctrines and logic for combat. The Ares was pitched as the Colonials stalwart super tank, proven technology that could be produced by the legion of the past. The idea that got the ball rolling on the visuals was that in the Great war, you would see these en masse. In theme, it was an upscaling of the mass produced Falchions.

From the concept artist perspective, at the very beginning of a concept it often helps to make up lore that doesn't always end up as the player facing version of the vehicle's back story.

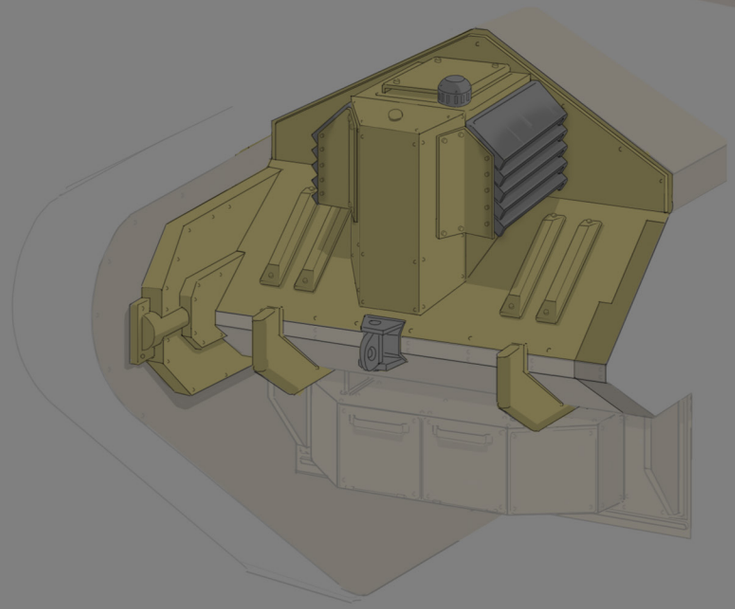

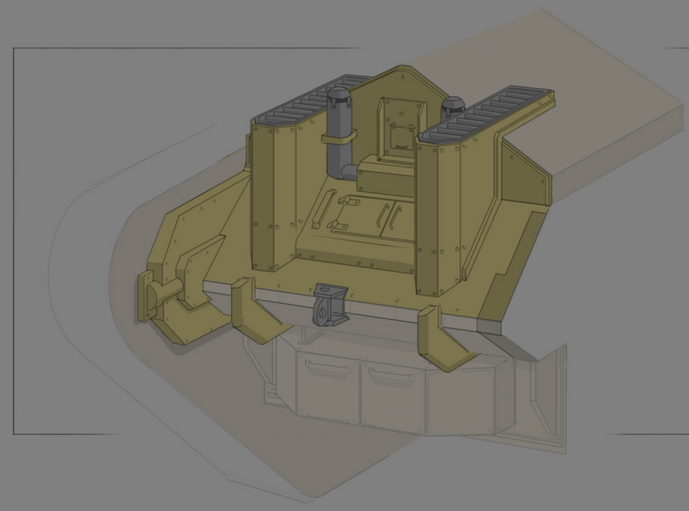

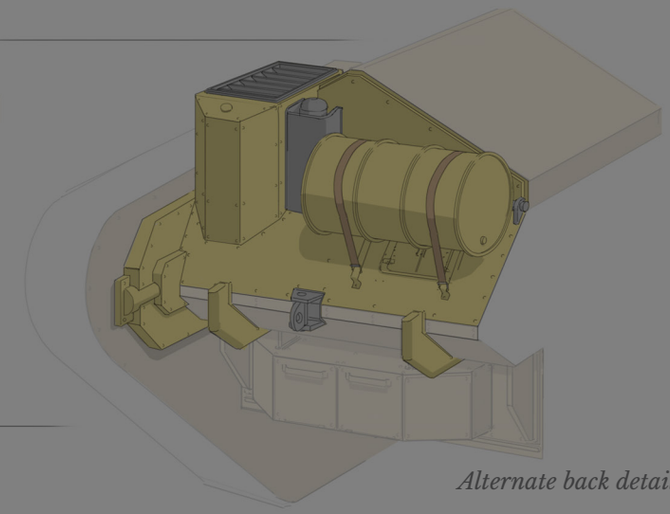

*Alternate back details*

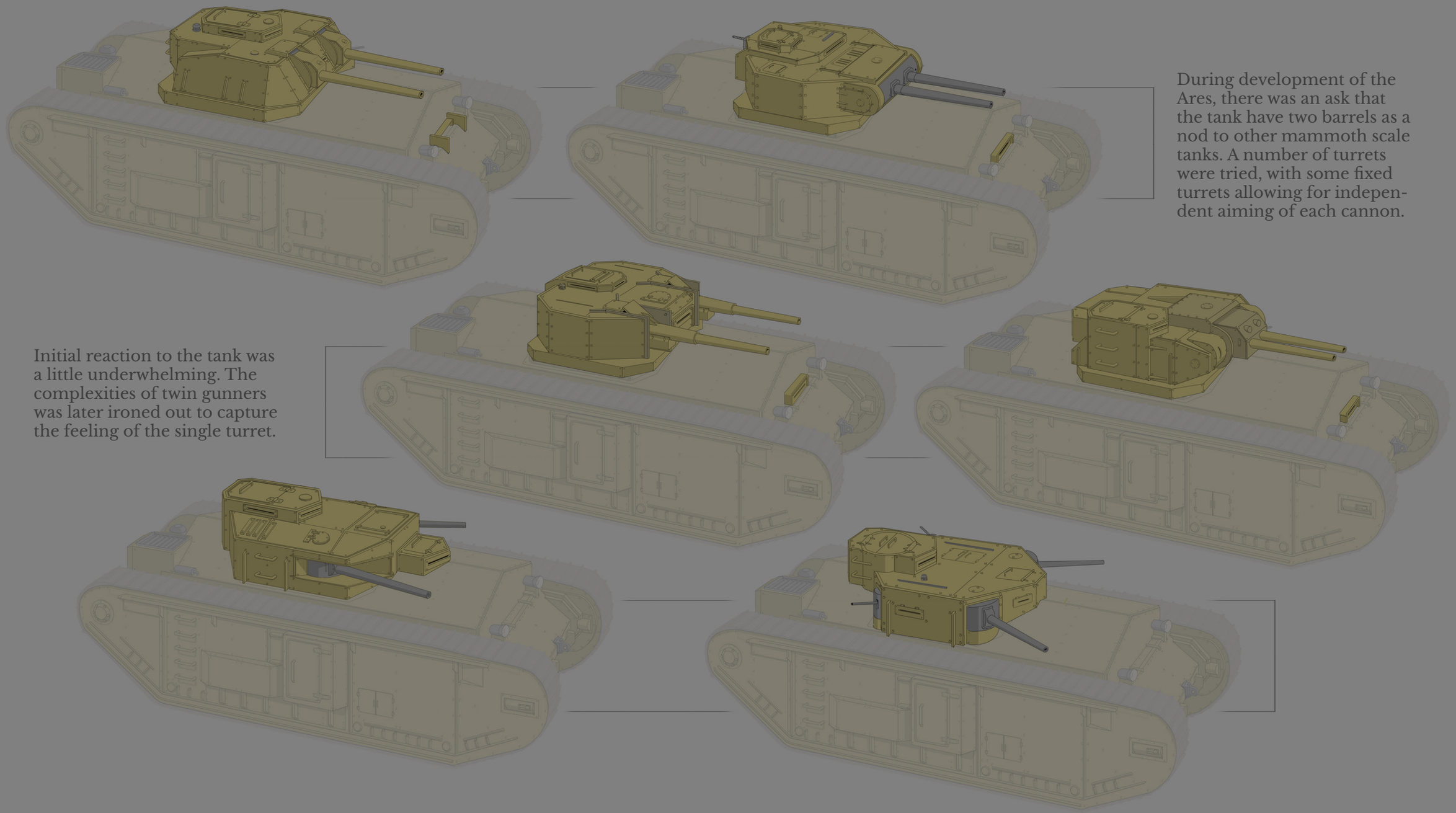

During development of the Ares, there was an ask that the tank have two barrels as a nod to other mammoth scale tanks. A number of turrets were tried, with some fixed turrets allowing for independent aiming of each cannon.

Initial reaction to the tank was a little underwhelming. The complexities of twin gunners was later ironed out to capture the feeling of the single turret.

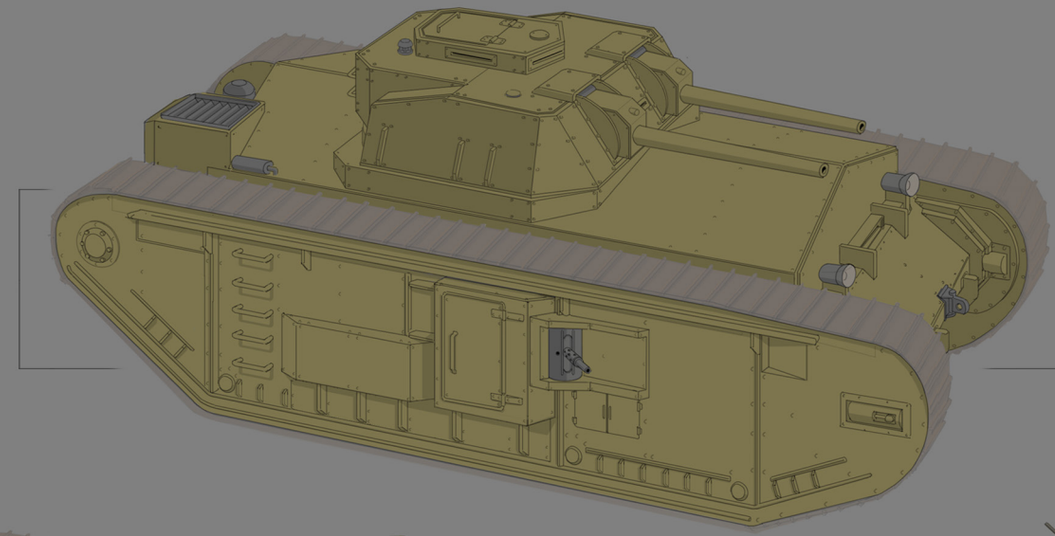

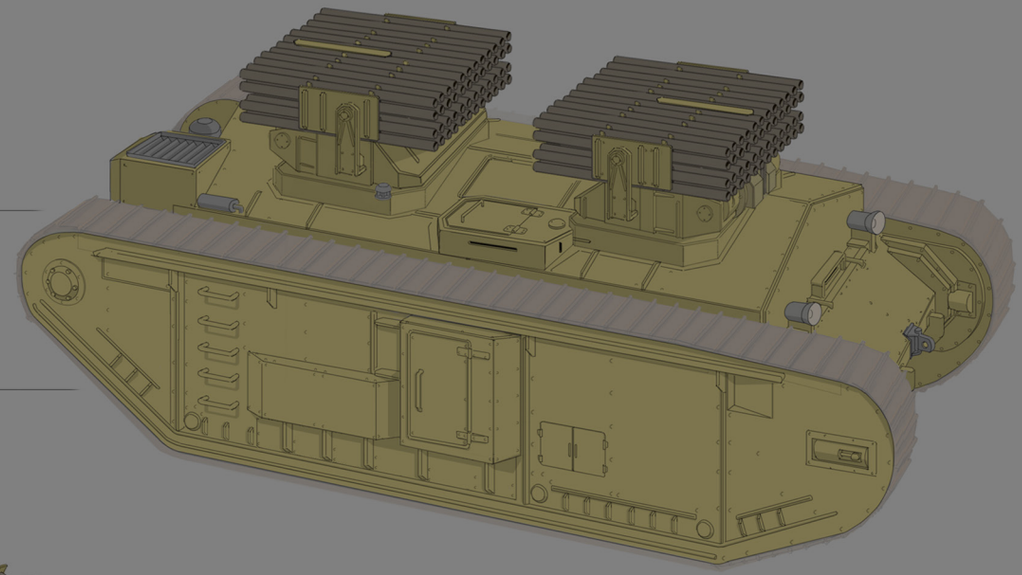

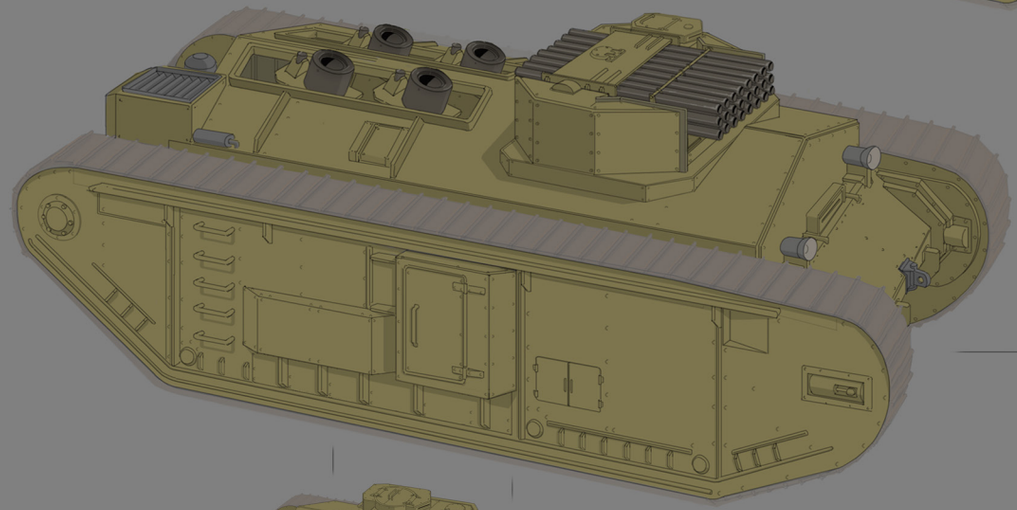

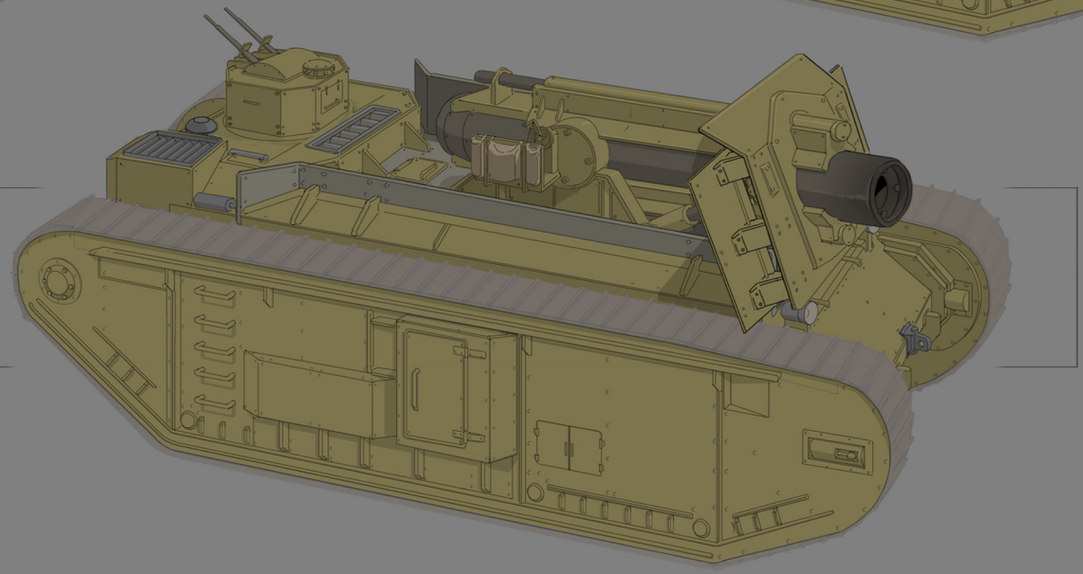

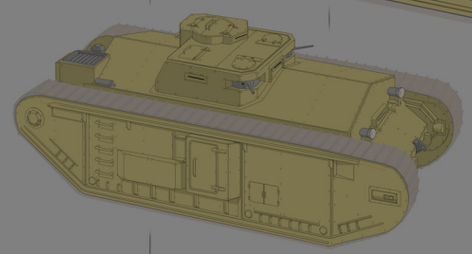

## Super Heavy Variants

Based on the early Colonial theme that their vehicles are more like pick up trucks, a pitch that the Super Heavy APC would be the base vehicle with a few different variants built off of it was created. This pitch was also centered around the idea of asymmetry, and that the two factions would approach building super heavies was different.

*Cullen Predator Mk. III*

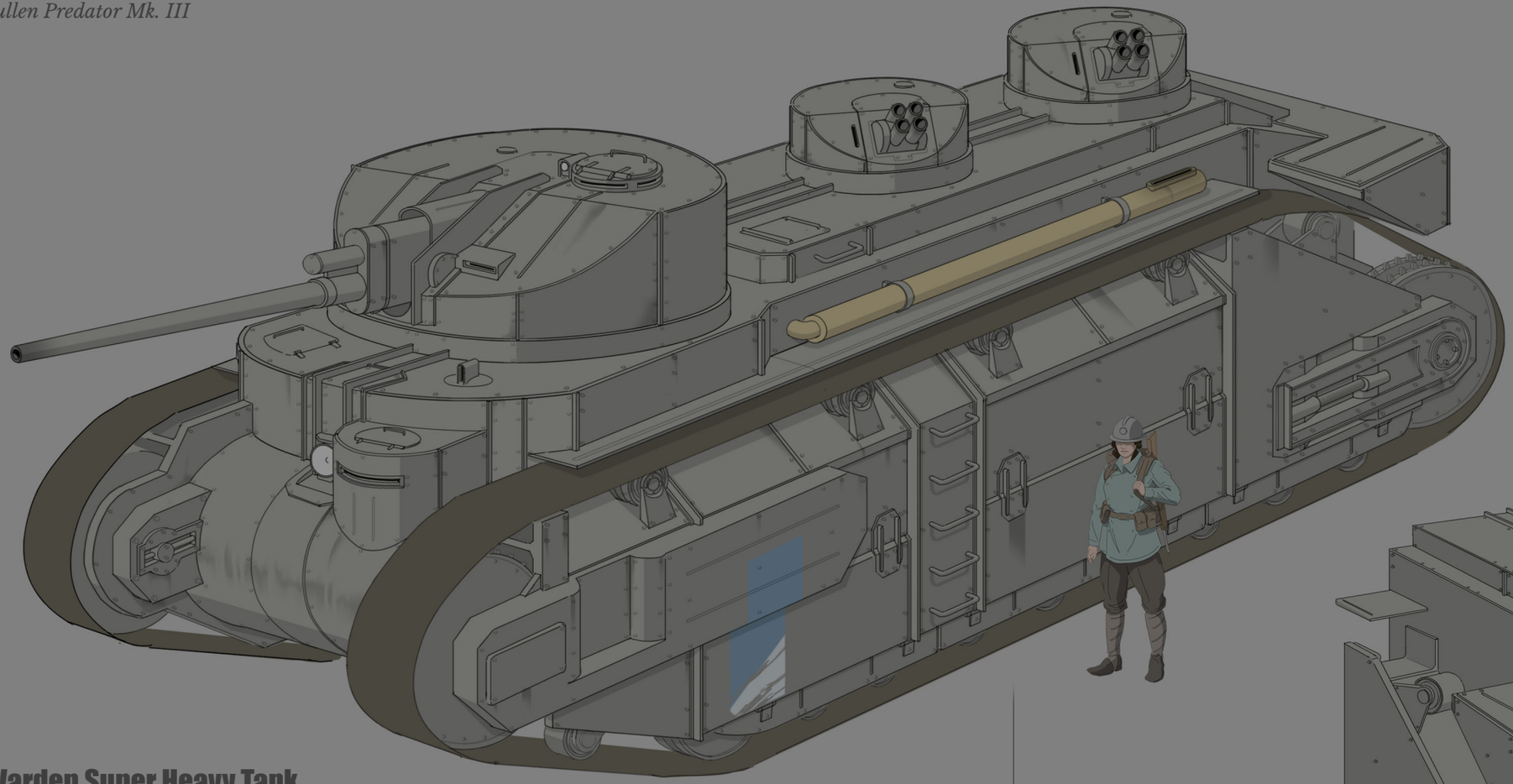

The orientation of the three turrets on the Predator came from a photo of an armoured train car from World War 2 .

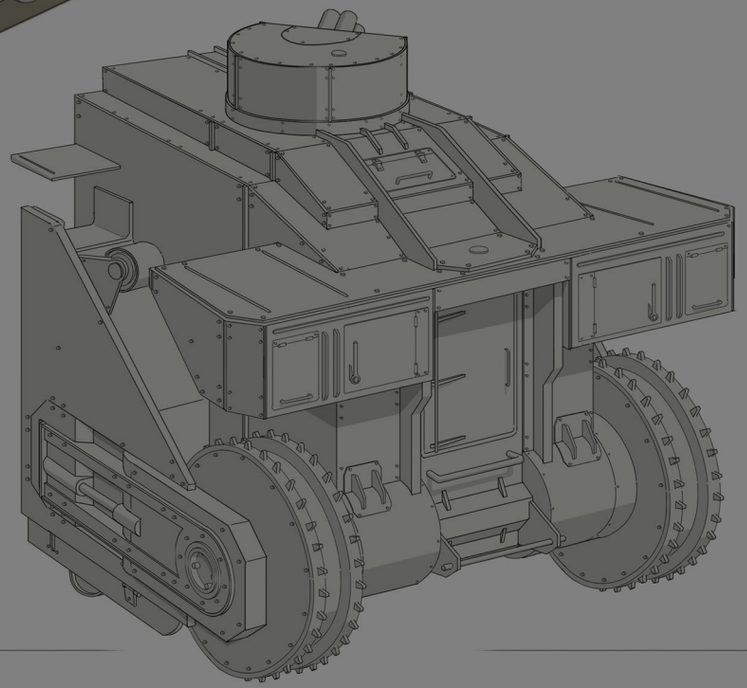

## Warden Super Heavy Tank

The Warden Super Tank evolved from the idea that, like the rest of their overengineered vehicles, Wardens would build a singular piece of art. Something overly complex that embodied the spirit of the nation and presumed greatness. Starting with a blank slate, lots of different chassis and roles were explored. What became the Cullen Predator started as a sketch for an amphibious super tank. The sketch was chosen, but the amphibious feature was never considered. However, it did influence the lore of the tank, giving a nod to the original designation of ‘landship‘ that would become tanks.

Unlike the Colonial super heavy, the design idea for the Wardens tank was that it is singular, and variants would intentionally not be developed.

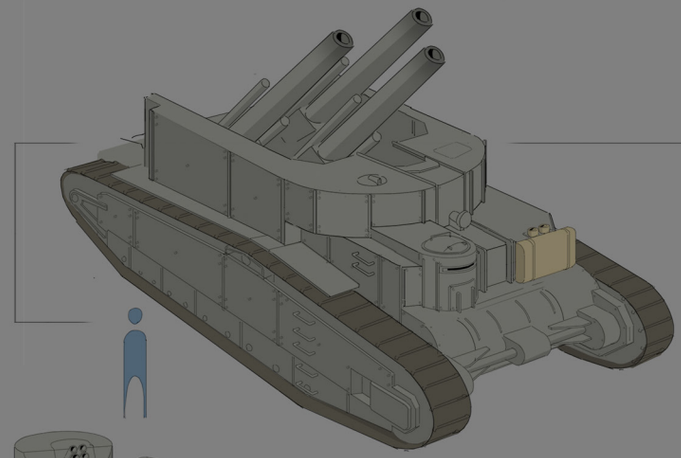

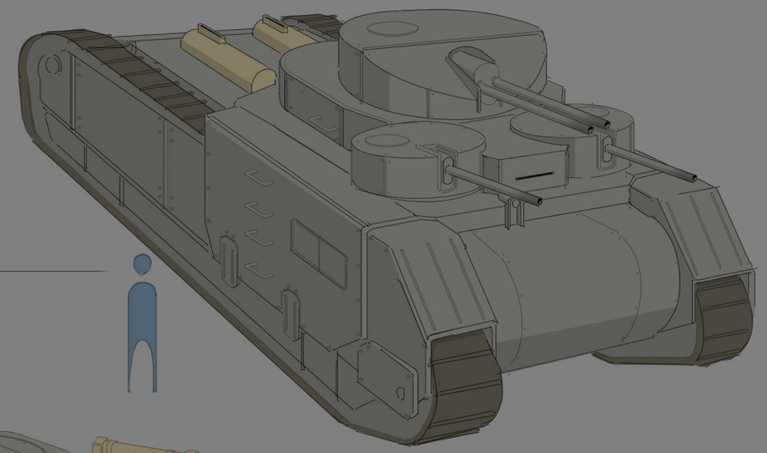

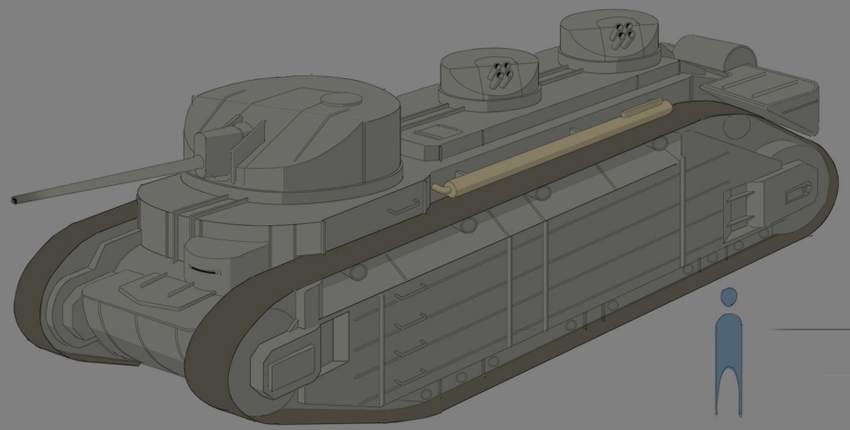

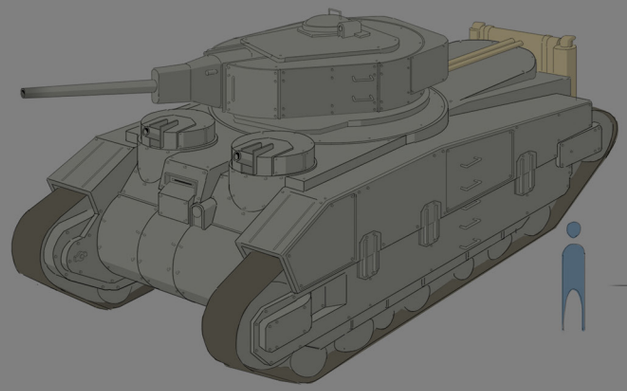

A limitation on all options became the width of bridges in the game, as there was no other way to get them across rivers, and no plans to make wider bridges at the time.

A mobile artillery base, mobile storm cannon, a fortress with lots of small turrets, an amphibious landship and a super tank destroyer were all explored.

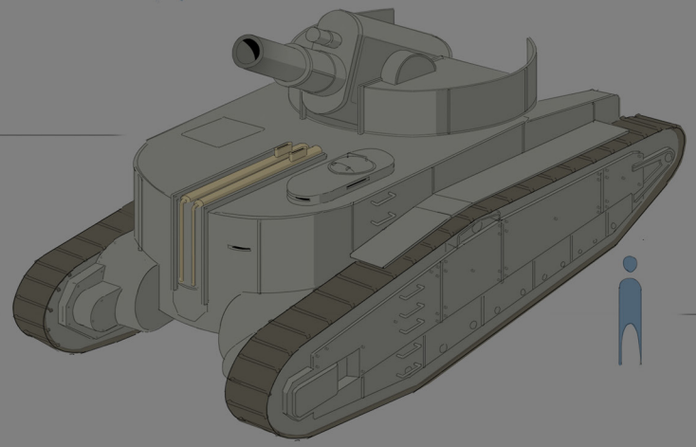

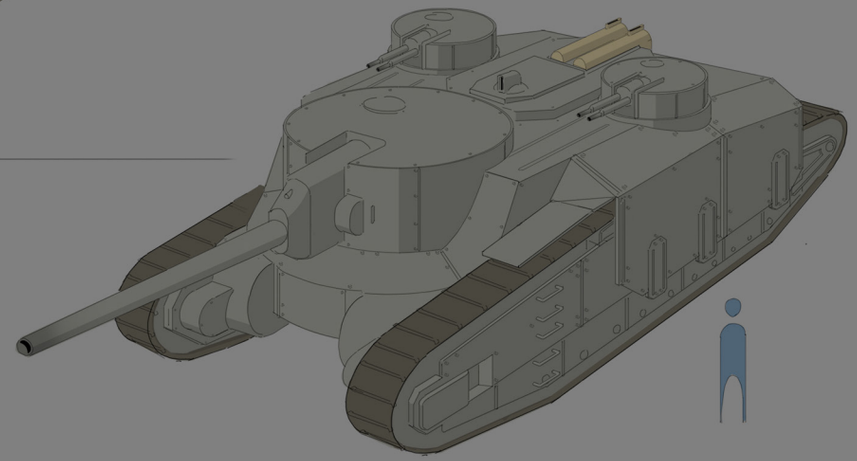

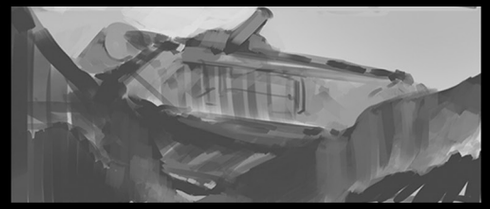

## World Set Pieces

At the beginning of the project back in 2016, there was an idea that the world of Foxhole would feature massive, building size, tank husks littering the land. Dubbed 'Behemoth Class Tanks', these would be evidence of the scale of 'The Great War' in Foxhole's past. As development went on, the idea was scaled back.

Early on, as a small team building a large playable world space, we could not afford the time to develop unique bespoke centerpieces for the world. Later in development, momentum for the old idea grew and we took a moment to develop a set piece. Part of this development was the idea that we could finally complete the West Gate Keep cannon and on the other side of the map we would have a giant tank stuck in the ice as a second stationary cannon. This would potentially act as a relic base functionally similar to West Gate.

When developing the tank stuck in ice, naturally a few ideas of how it got stuck there evolved. The actual final lore might change but as for the 'unofficial lore' generated while working on the paintings; this was going to be a story of hubris. The Wardens had created what they thought was an unstoppable, unkillable mobile fortress, however on the way to the front line on its first deployment the weight of the tank collapsed the hillside it was on and it slid into the ice and became unrecoverable. A reminder and embarrassment to the Wardens from The Great War.

An additional idea for some lore was that this would have been one of two sister tanks constructed at the same time. This one ended up stuck in the ice, and the twin was lost mysteriously in the Wardens records.

As momentum grew for the idea of set pieces there were hopes we could revisit one of the first paintings for the game and feature the husk of a giant Colonial tank which was used to breach the Bulwark.

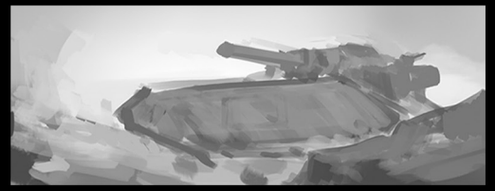

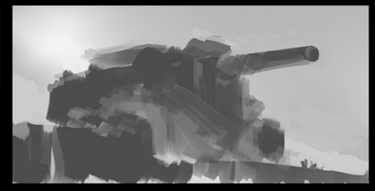

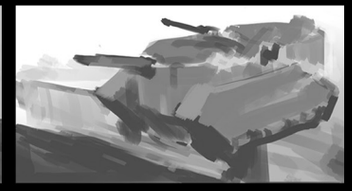

## World Set Pieces

At the time there was an energy that this would be the next big thing for the game world. A more concrete design was made, and there were talks of possible interior space for the players. The idea that the cannons (both on the tank and West Gate) could be repaired and used. The caliber would be larger than the 300mm cannons in the game and they would be end game objectives similar to the rocket sites, which at the time were not player built but placed in the world.

At the time we showed off one of the paintings on a devstream, alongside a silhouette of the tank under a ‘top secret’ label.

Unfortunately momentum faded as core components to the game needed attention first and the idea of set pieces became low priority.

The setpieces were a particularly fun part of the project to concept. With the new addition of Airborne and being able to see the world from a new height, larger landmarks might hopefully become a prominent feature in the game going forward.

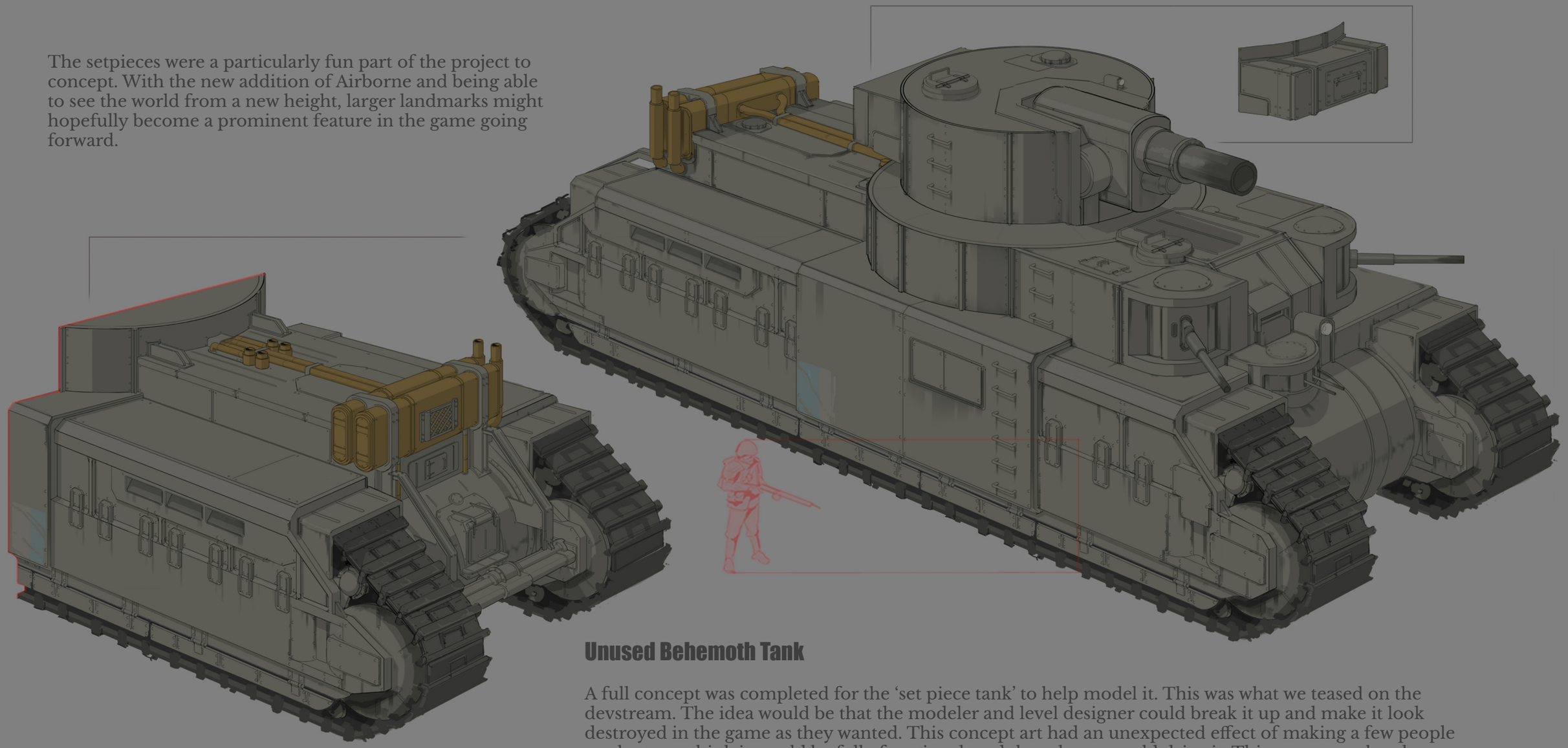

## Unused Behemoth Tank

A full concept was completed for the ‘set piece tank’ to help model it. This was what we teased on the devstream. The idea would be that the modeler and level designer could break it up and make it look destroyed in the game as they wanted. This concept art had an unexpected effect of making a few people on the team think it would be fully functional, and that players could drive it. This was never the plan, but even so it was too big for the world of the game, and could not cross rivers, bridges, hills, forest or get through towns. The scale was just too big. However this started the idea for the playable super tanks at a scale that works in the game.

The core of the idea was to add something closer to a mountain range to fight over than a relic base. Luke worked closely with the level designer and modeler. Dubbed the 'Stlican Shelf Personality Pass' The task itself was daunting for the team.

## Stlican Shelf Personality Pass

Having a small art team means we've got to maximize how much time we allocate to things like unique set pieces. As a result, there have been tons of interesting set piece ideas that haven't seen the light of day. Often these come in the form of landmarks, cities, natural features, etc. From the Great Warden Dam to the Bulwark, we've managed to maximize our resources to bring Foxhole's world alive visually when it makes sense.

Stlican Shelf wasn't a planned map. It was actually a last-minute addition to solve a map design problem that required an extension of Weathered Expanse. We felt the first version lacked any real identity. - Matt

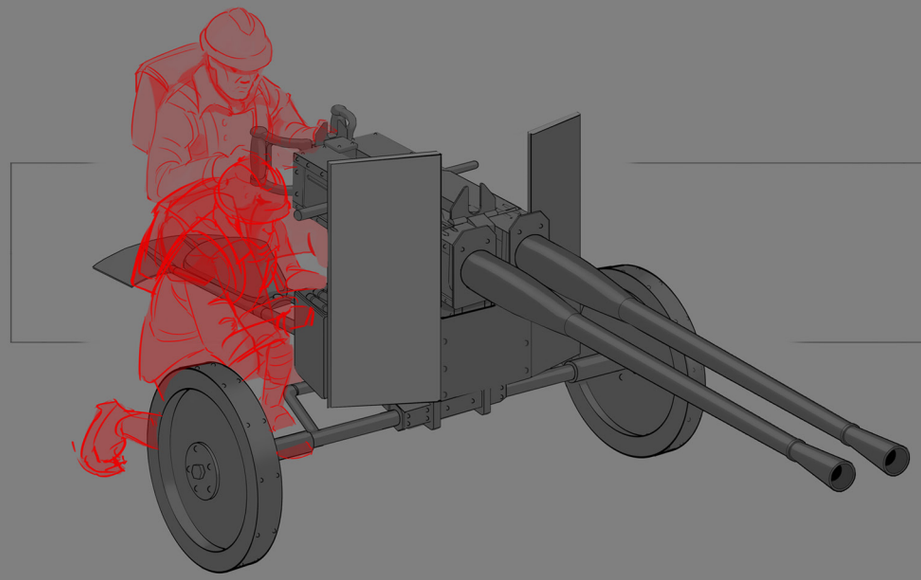

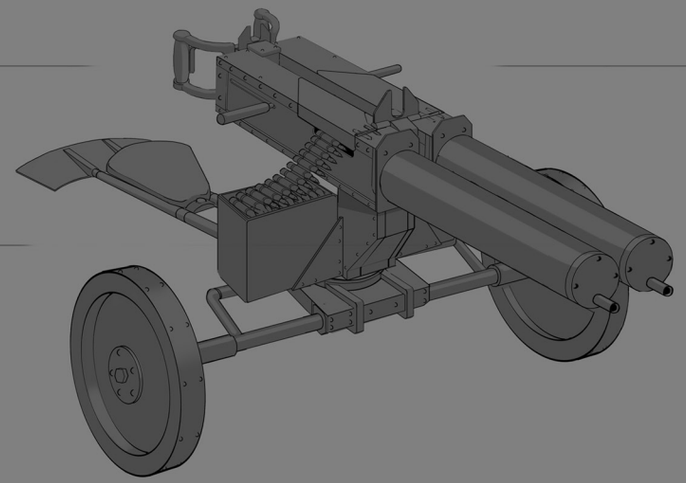

## Field Guns

At the very beginning of the project, the Field Machine gun was designed with a seated gunner. Foxhole was a smaller game at that time, and there was an issue - the field machine gun was only supposed to be a two person ‘vehicle’. Mounting the gun on one side was a compromise at the time. Ironically, years later a third player can stand on the back foot of the gun and get a free ride.

An early decision to reuse the same chassis, wheels and support leg, then alter the gun and shield has made designing new field guns easy.

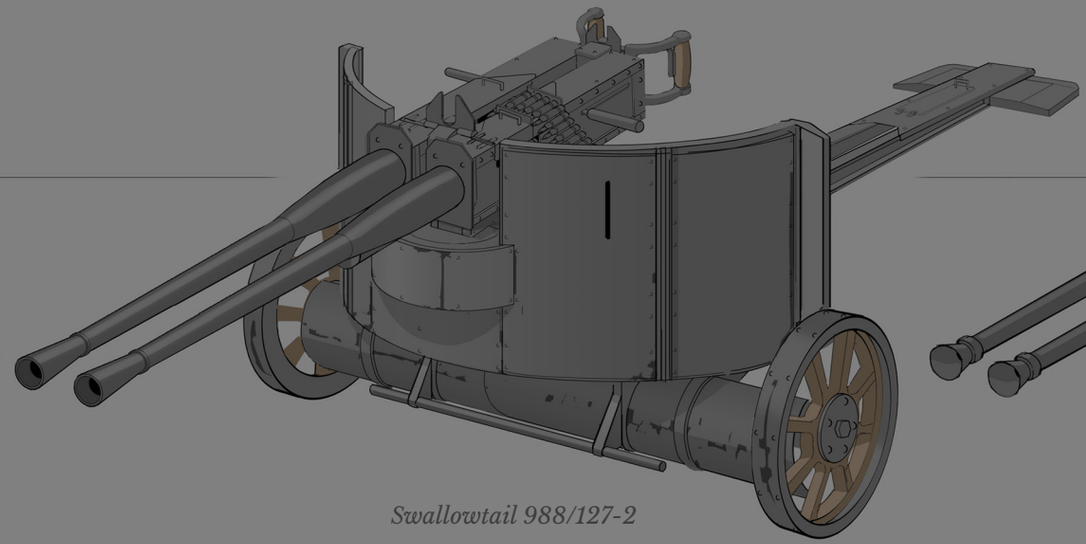

*Swallowtail 988/127-2*

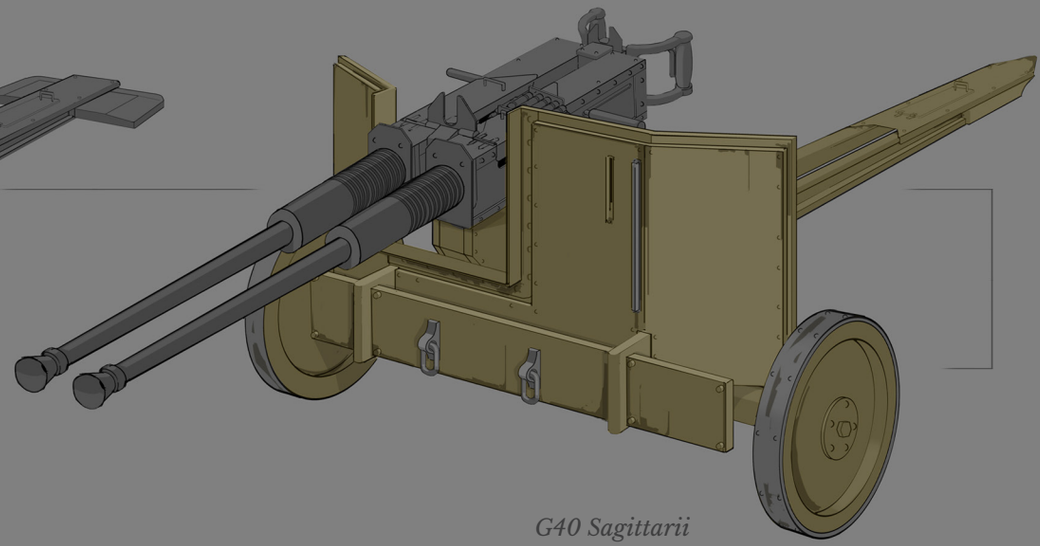

*G40 Sagittarii*

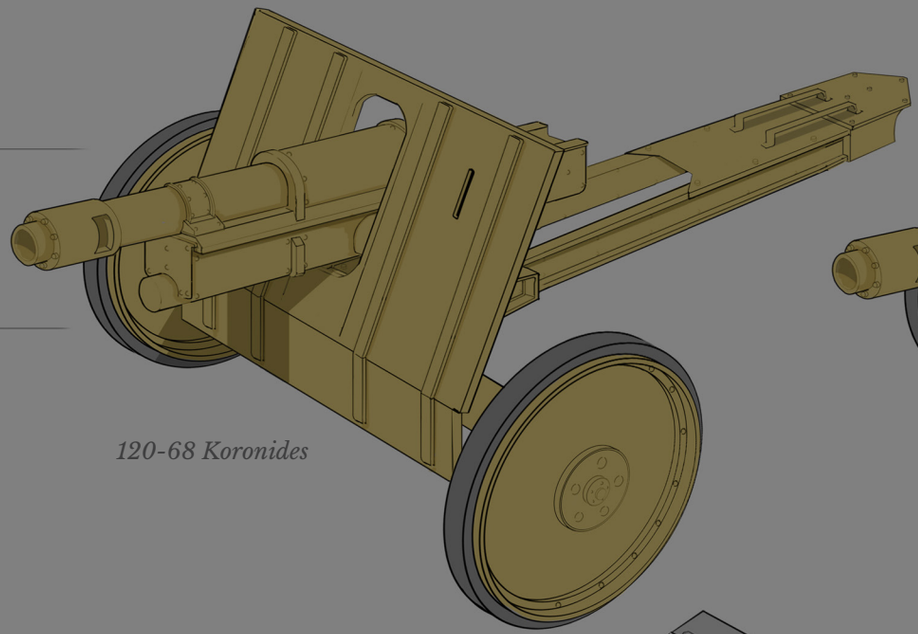

*120-68 Koronides*

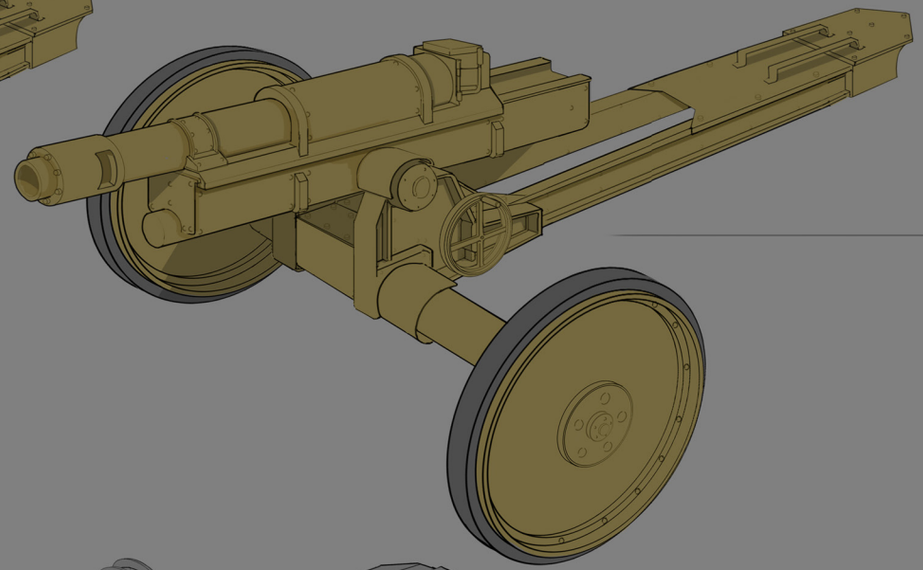

The 120mm Field Guns underwent a number of gameplay changes, but the visuals stayed the same.

The Warden 120mm was removed when asymmetry was added to the game, but the model was later reused with minor changes as a 40mm cannon.

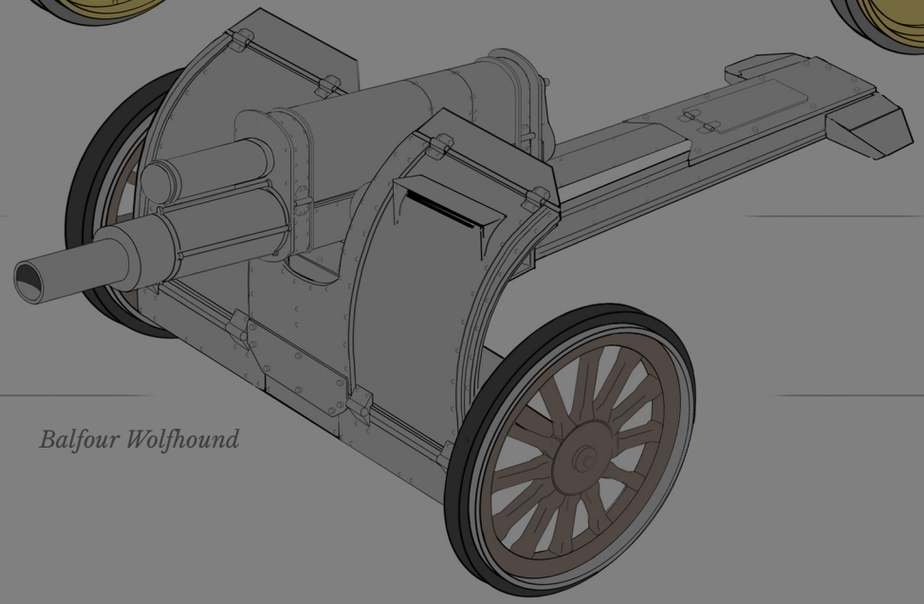

*Balfour Wolfhound*

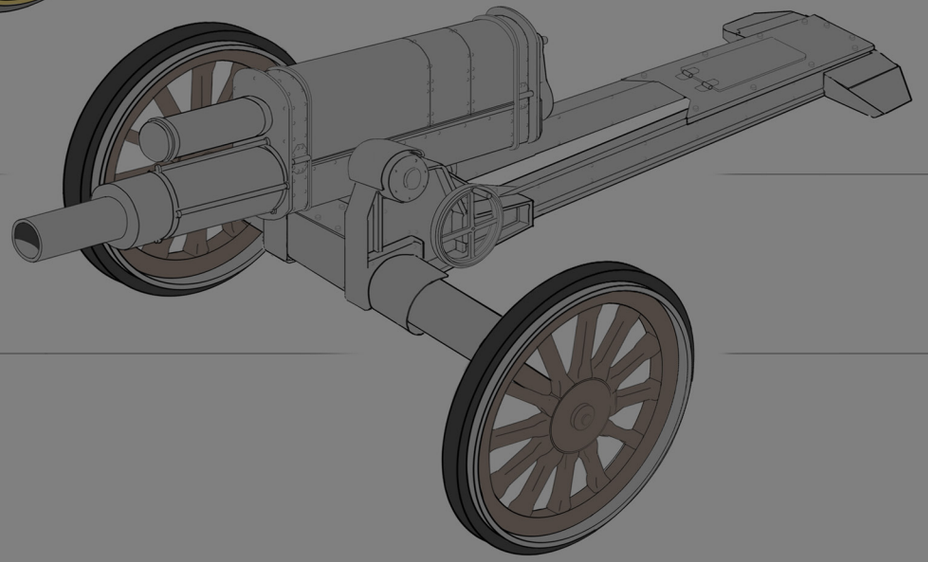

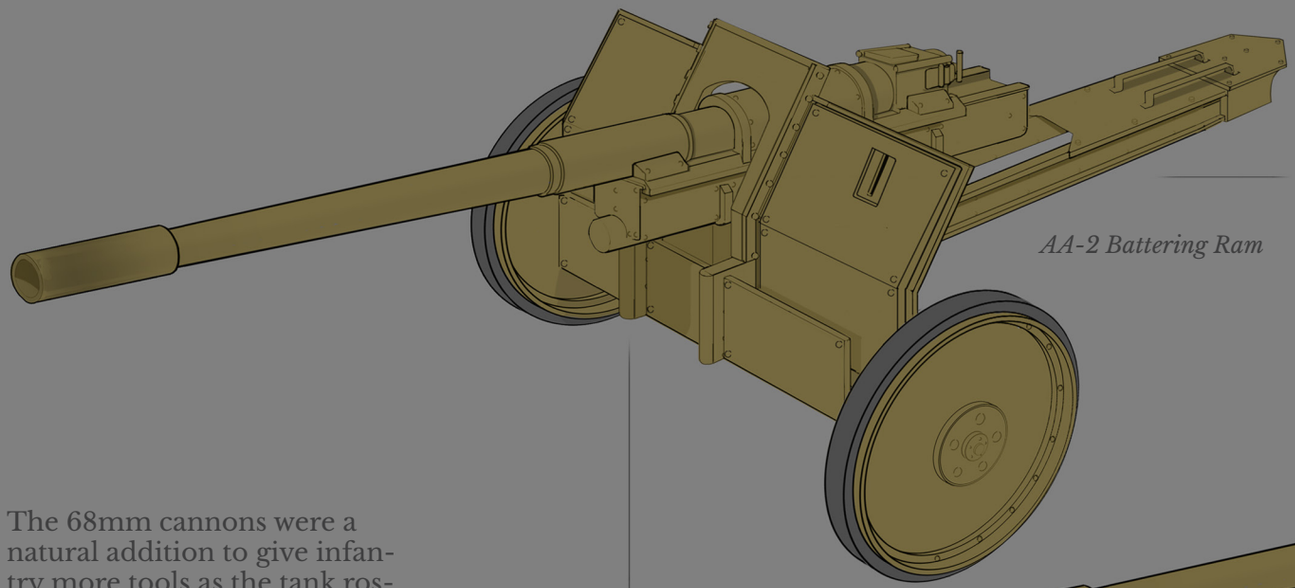

*AA-2 Battering Ram*

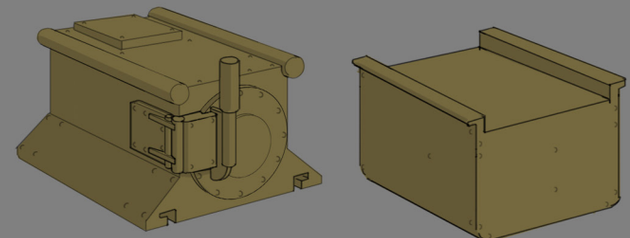

The 68mm cannons were a natural addition to give infantry more tools as the tank rosters grew. Visually, they were simple additions to design.

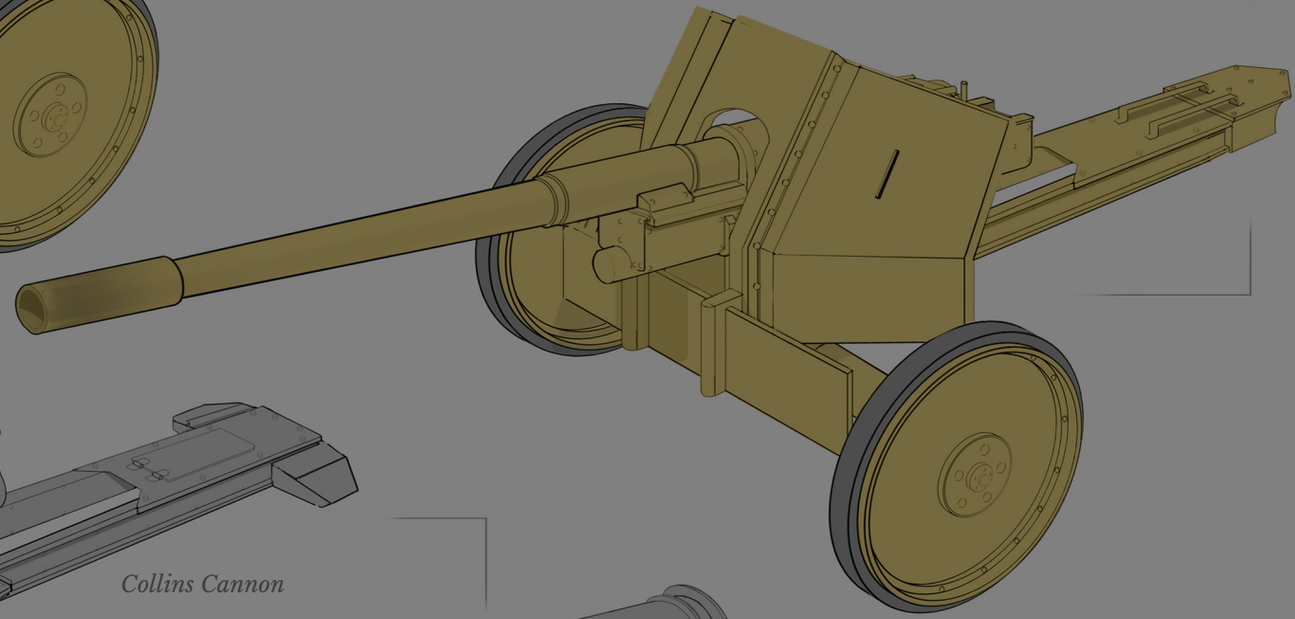

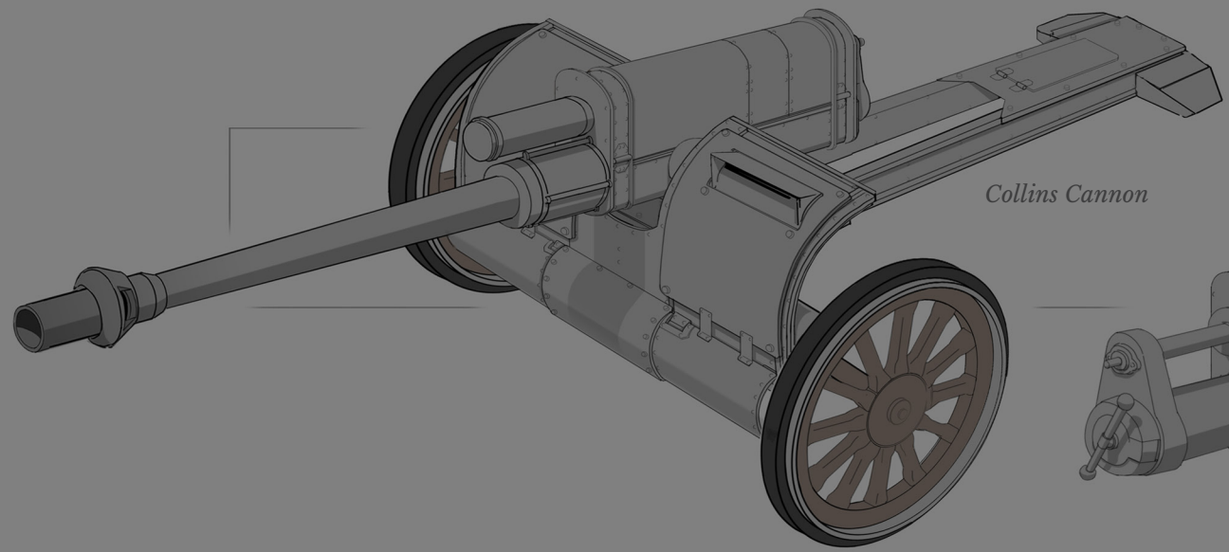

*Collins Cannon*

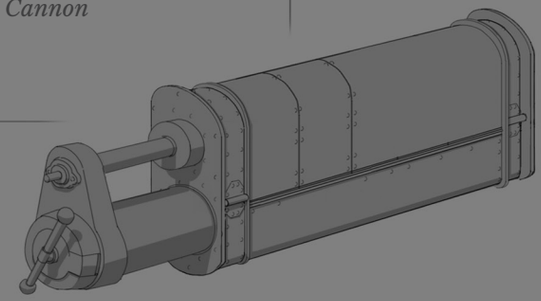

A few simple alternate shields were pitched, but even then it was straightforward work.

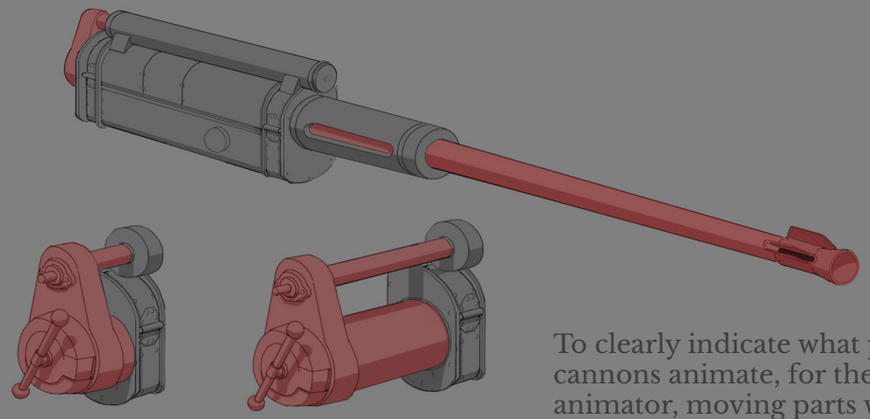

To clearly indicate what parts of cannons animate, for the rigger and animator, moving parts were highlighted in red.

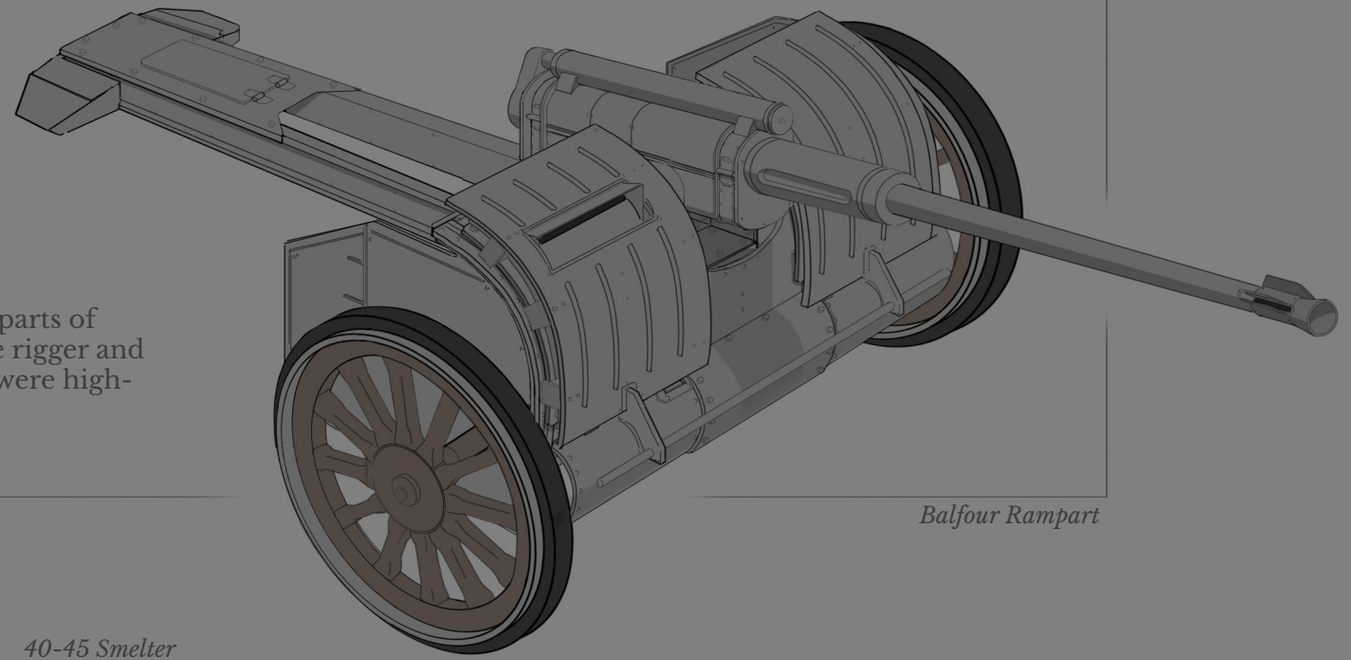

*Balfour Rampart*

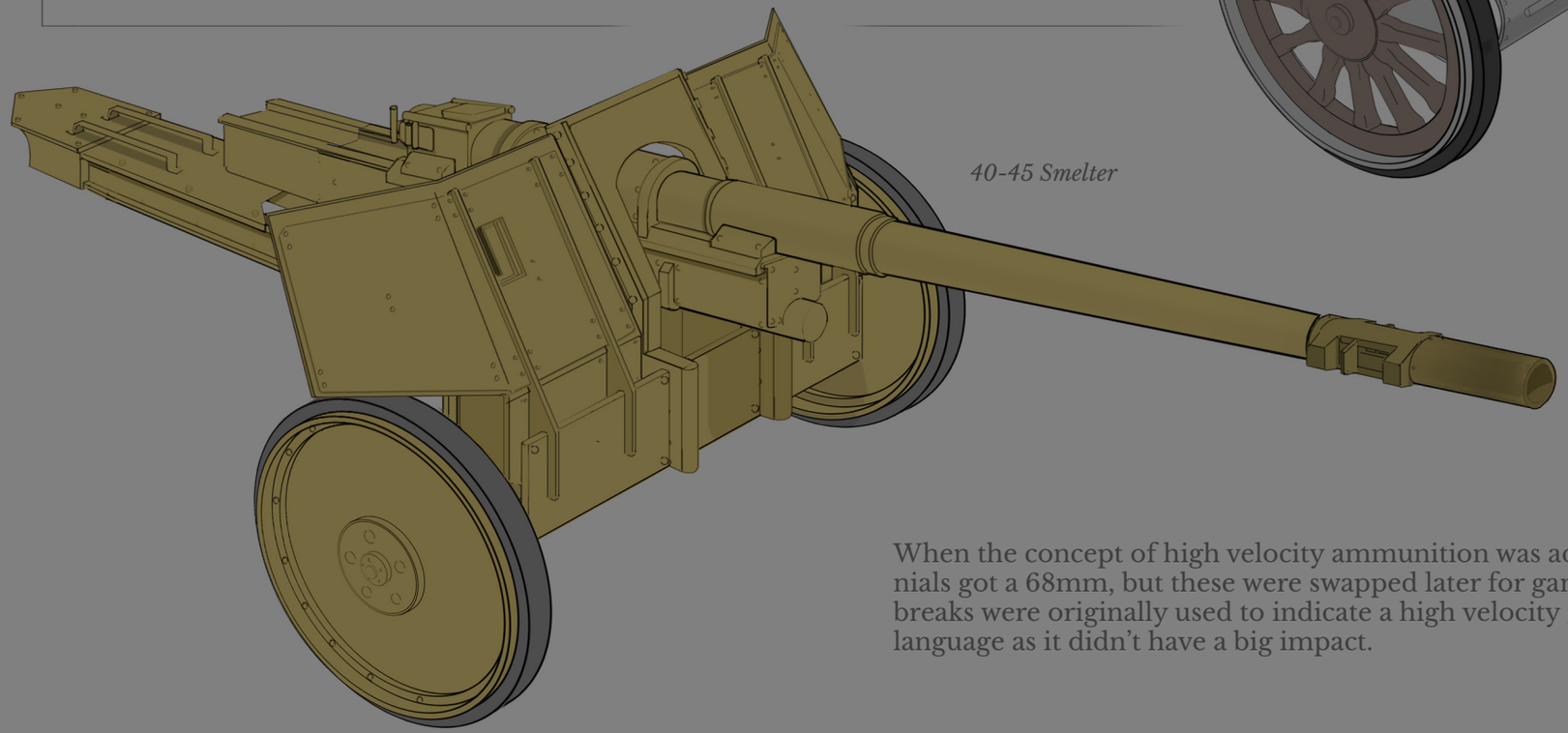

*40-45 Smelter*

When the concept of high velocity ammunition was added, the Wardens got a 40mm and Colonials got a 68mm, but these were swapped later for gameplay balance. More noticeable muzzle breaks were originally used to indicate a high velocity gun, but this was later dropped as a visual language as it didn't have a big impact.

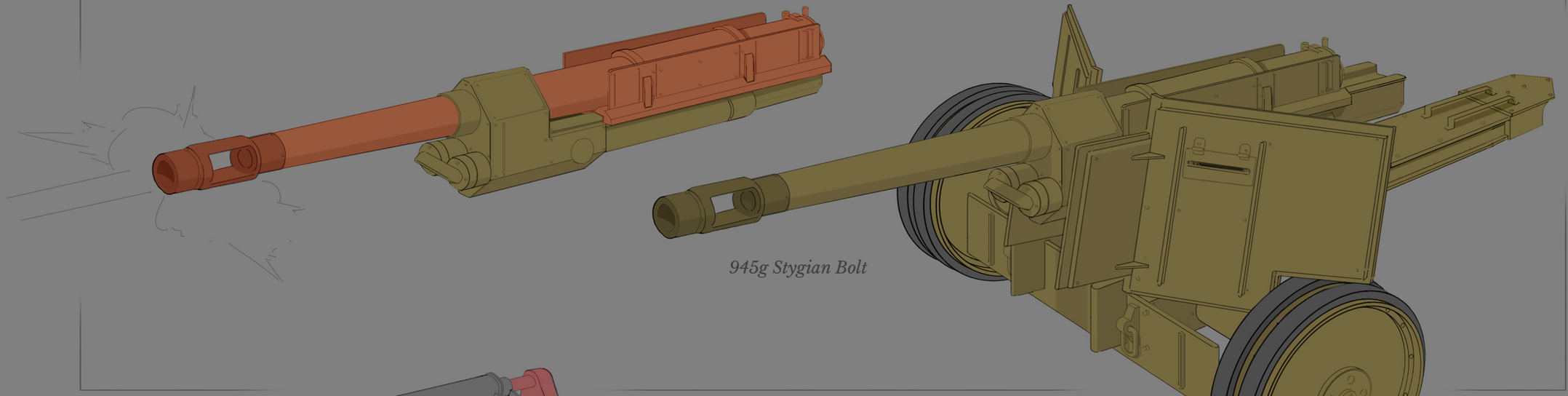

*945g Stygian Bolt*

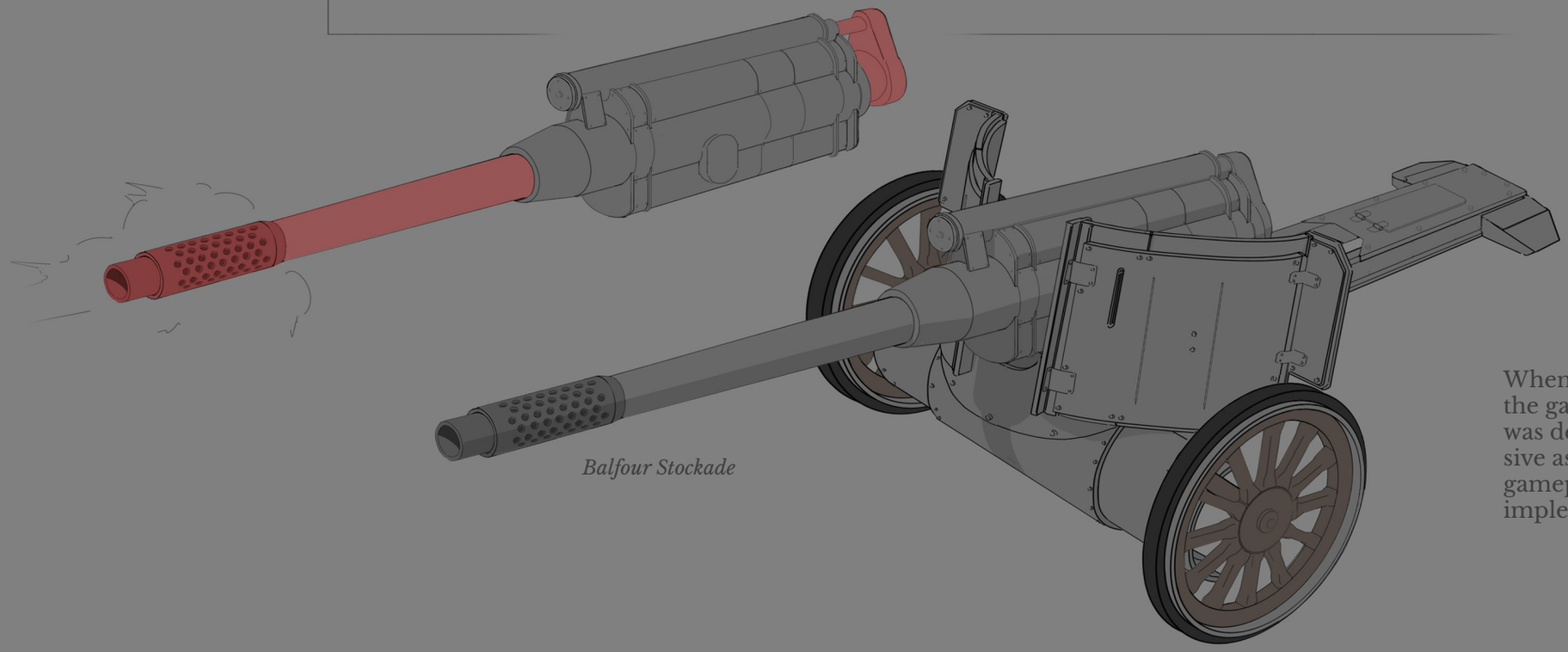

*Balfour Stockade*

When the larger caliber ammunition was added to the game (75mm and 94.5mm), an updated chassis was designed to make the field gun look as impressive as the cannon it carried. This would inspire new gameplay mechanics later on, and a chassis would be implemented on a few choice field guns

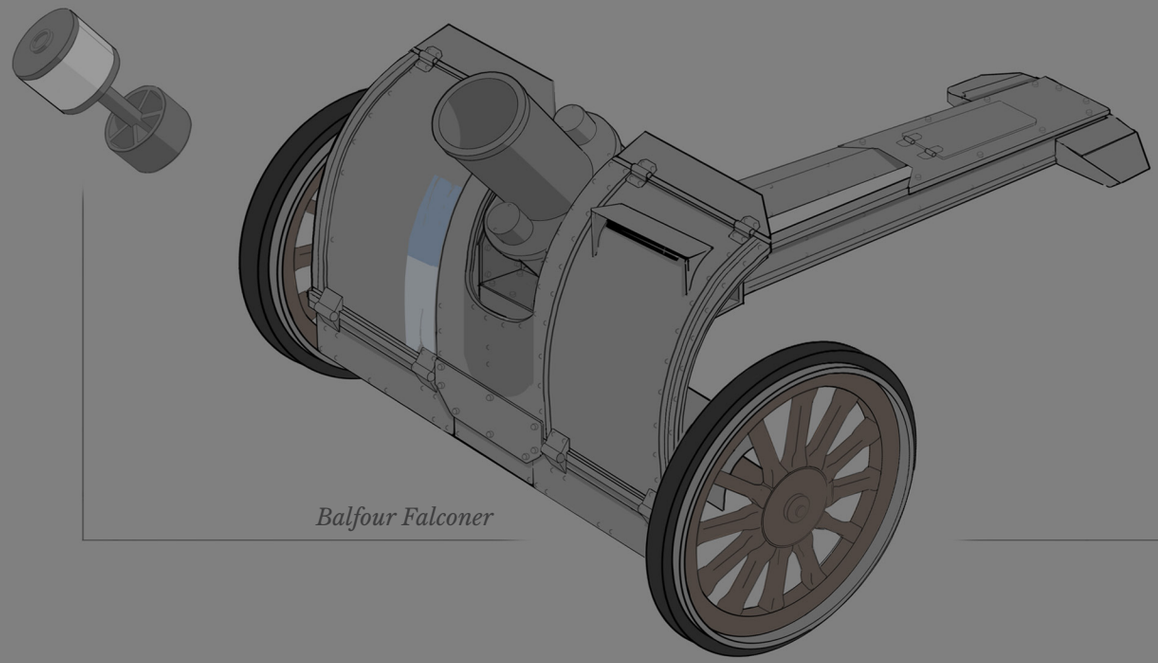

*Balfour Falconer*

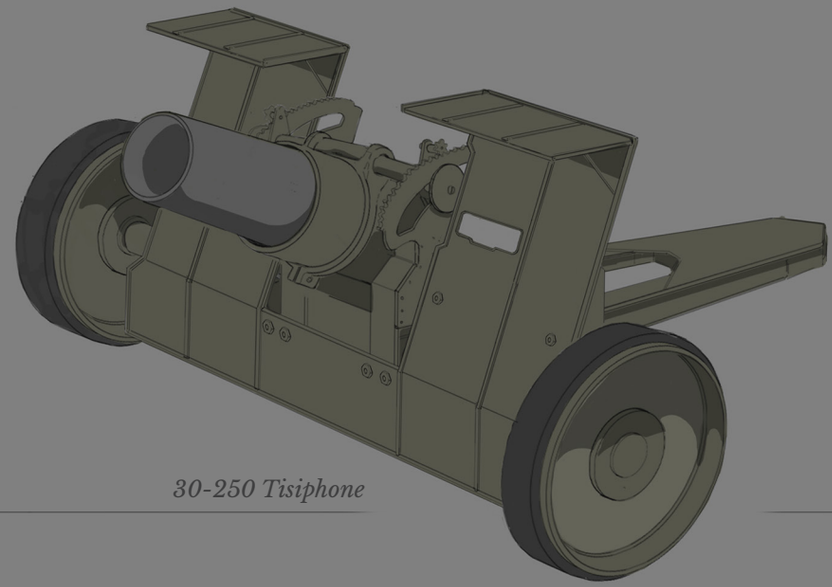

*30-250 Tisiphone*

A few times in the game's life, there has been a clear need to lean back to symmetrical options for both factions. The 250mm field gun was originally the Wardens counter to the Colonial Ballista. At the time of designing the concept it was hard to imagine the field gun would be the favorite. A few years later our second concept artist would design the Colonial version.

*A few unused concepts of note are a 30mm repeating cannon, and a heavy mortar.*

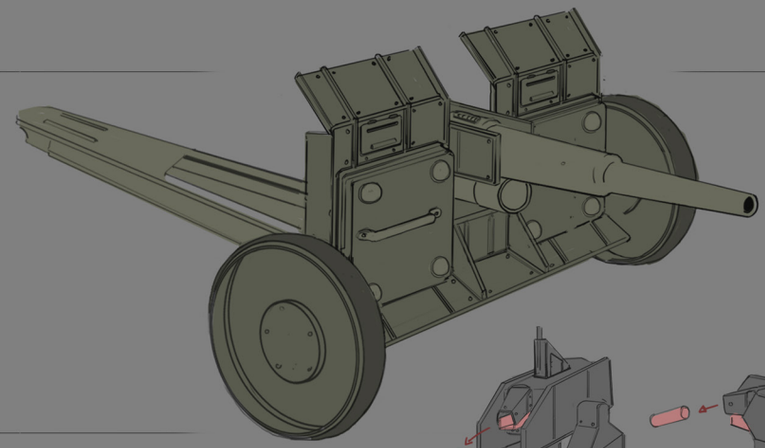

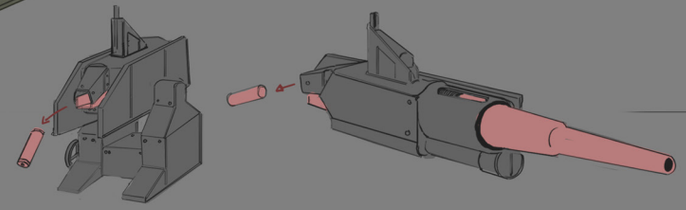

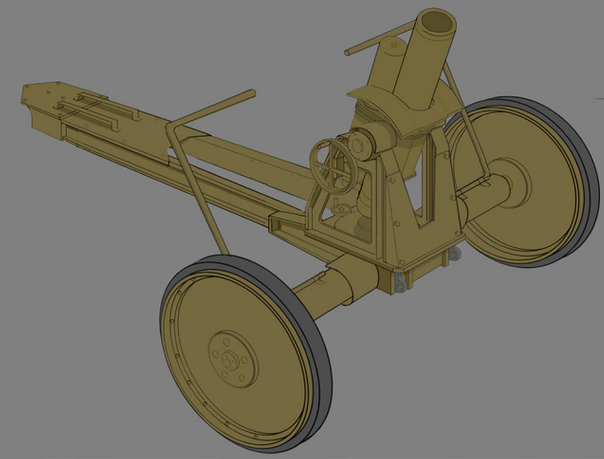

*GA6 Cestus*

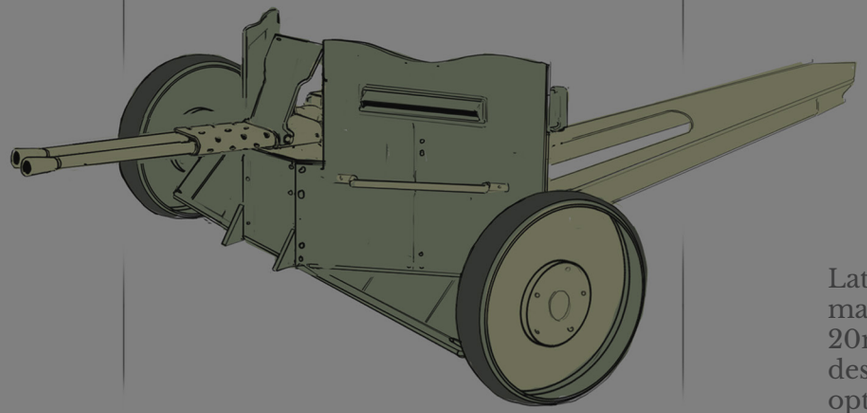

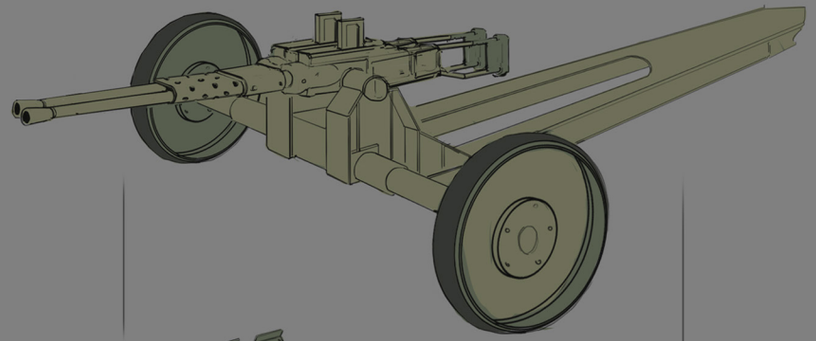

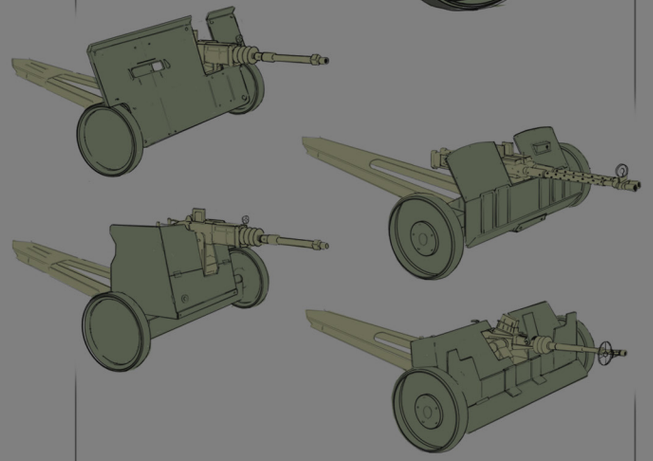

Later in production, the game made some critical changes to 20mm ammunition. This was designed to give infantry more options against tanks at all stages of the war. This opened the door to design some early game field guns.

The Field AT Rifles were pitched and themed to be old, out of date guns, underpowered but forced back to the front lines out of necessity.

*Duncan's Coin*

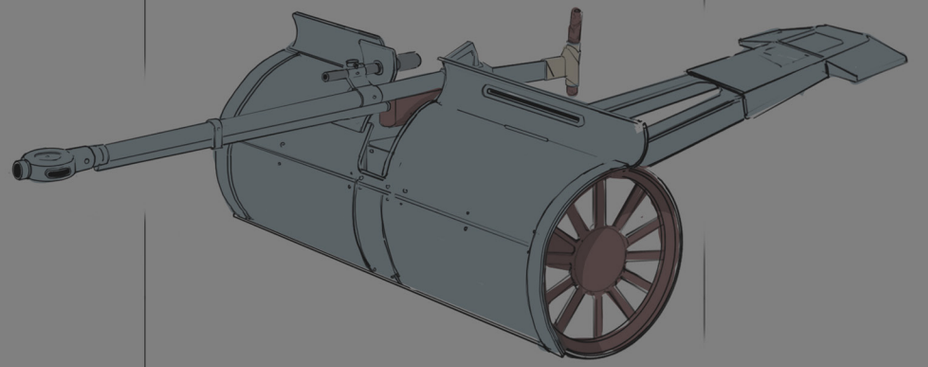

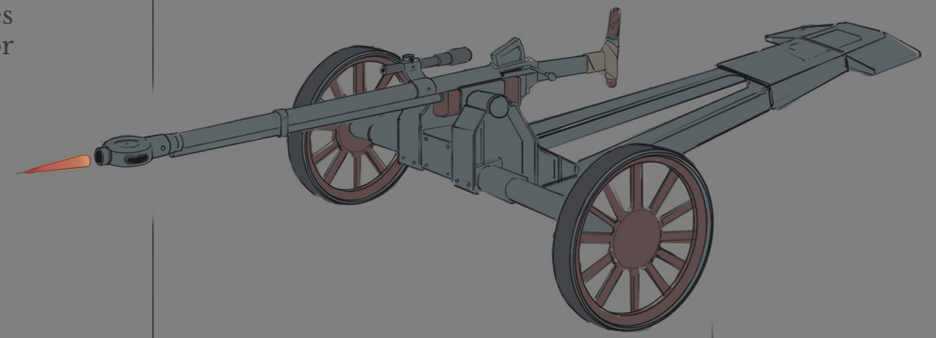

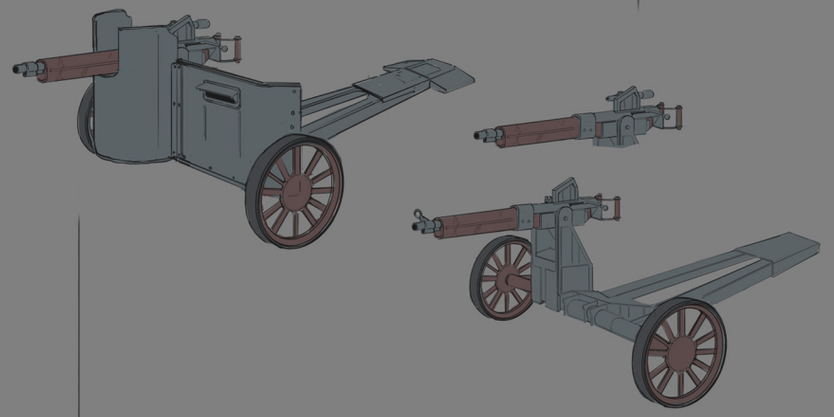

## Heavy Chassis

The tanks had light, medium and heavy options and expanding the gameplay for the Field Guns to add a heavy class felt like a natural choice. At this time, we were adding the ability for vehicles to tow trailers and field guns. Adding new heavy field guns that were slower to move by infantry, and had to deploy legs and an anchor to fire created more depth to a feature that's been in the game since the beginning.

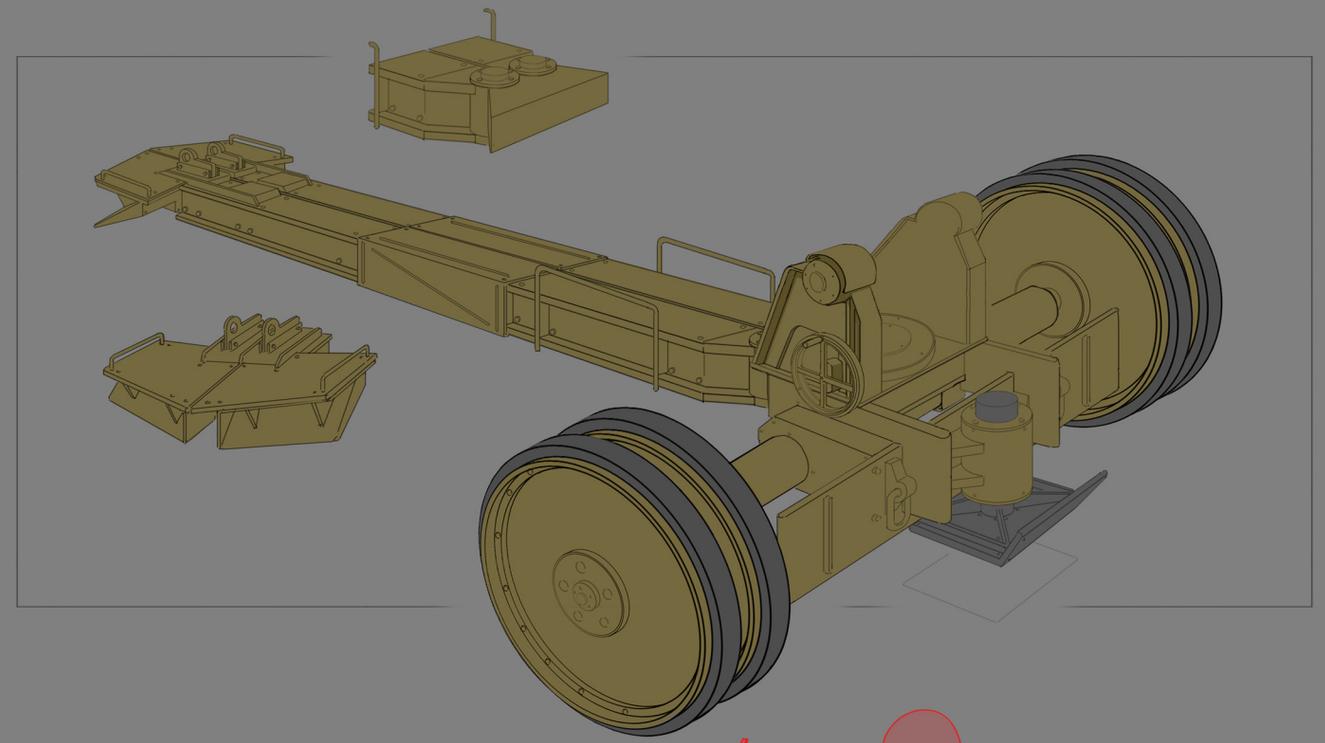

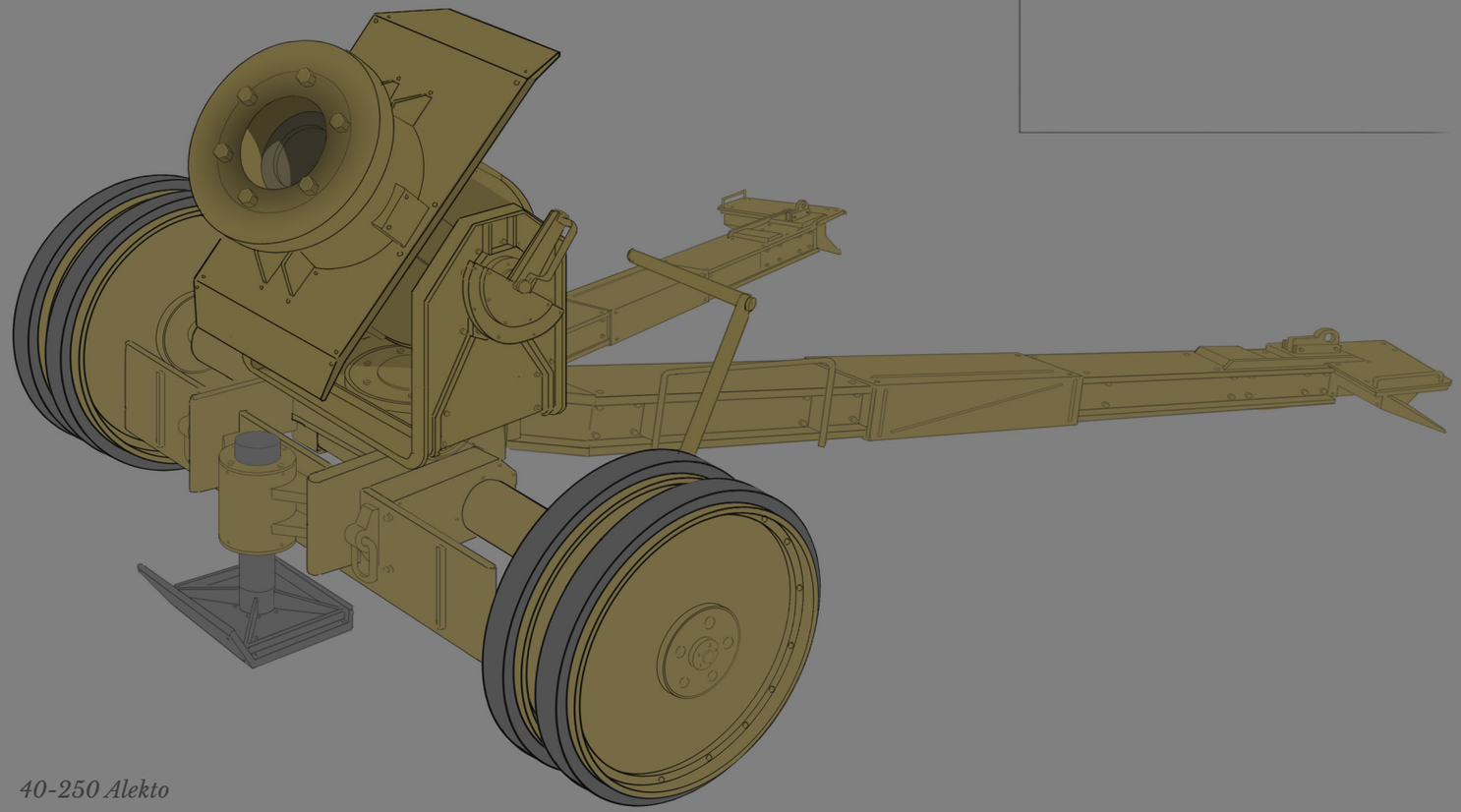

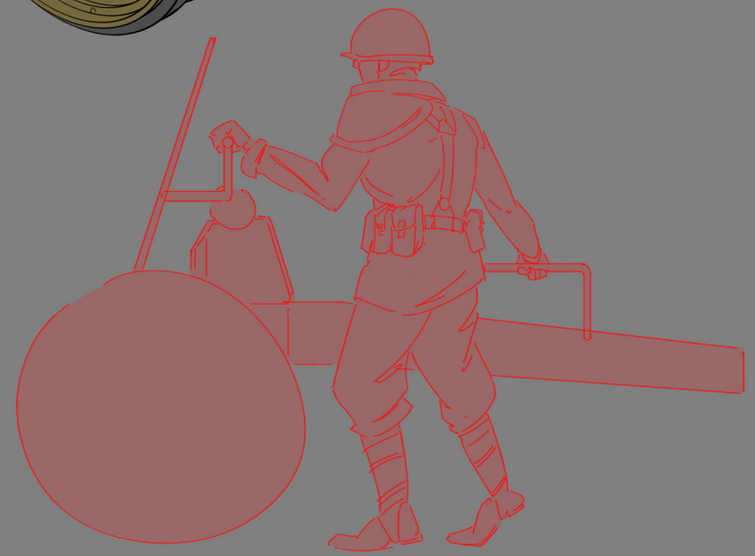

*40-250 Alekto*

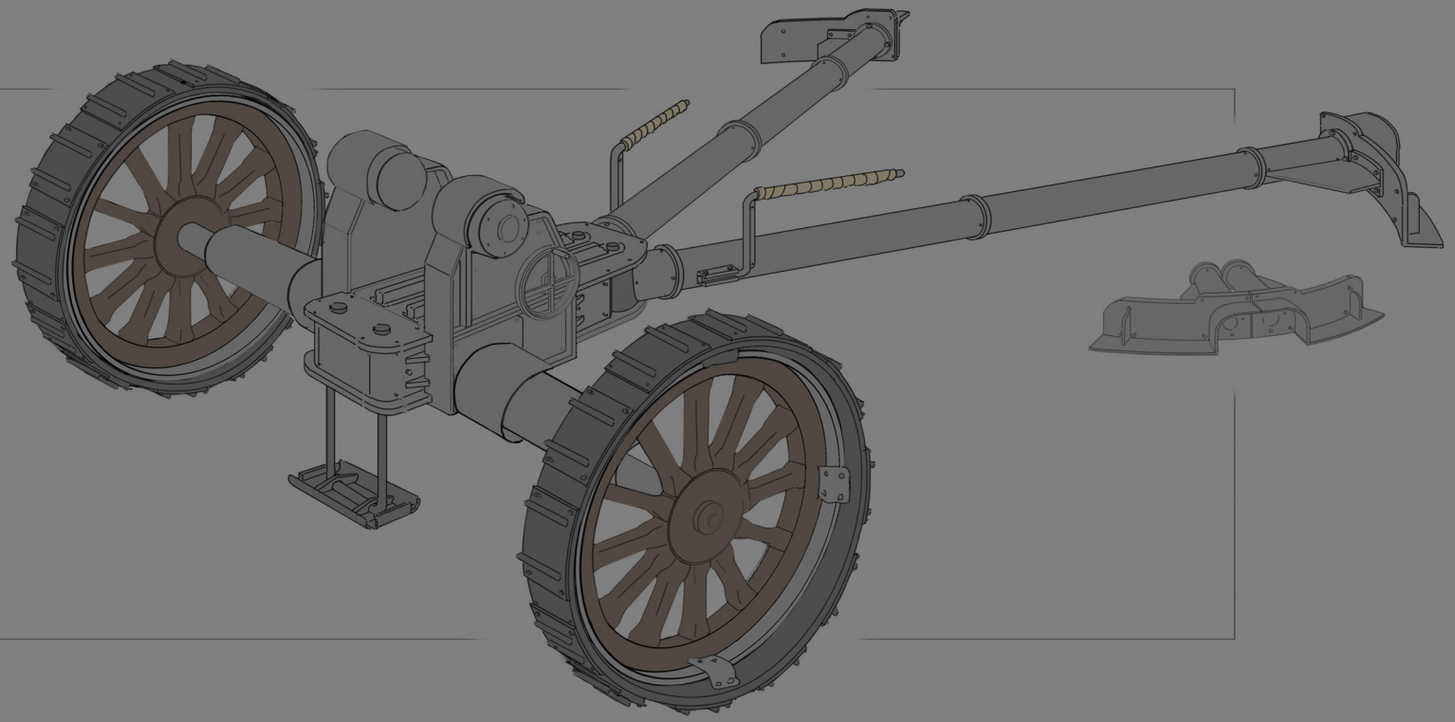

## Heavy Chassis

The Warden Field Launcher was actually designed in 2016, years before players saw it. Back when the gameplay was symmetrical, both a Warden and Colonial version were designed and modeled. They were shelved until the rocket artillery gameplay was fully implemented and by then asymmetry had changed the game. When Heavy Chassis were added, the weapon system was selected for the new Warden chassis and the final combination looks much better for it.

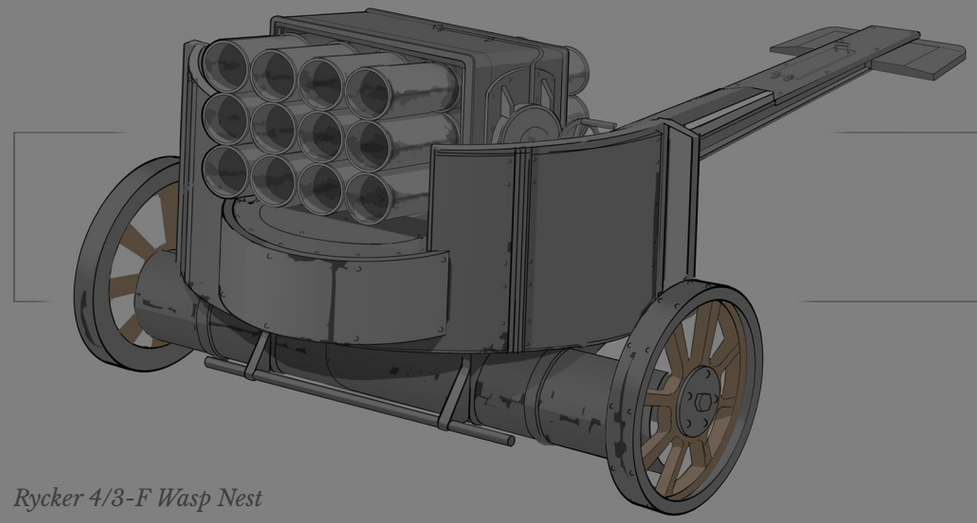

*Rycker 4/3-F Wasp Nest*

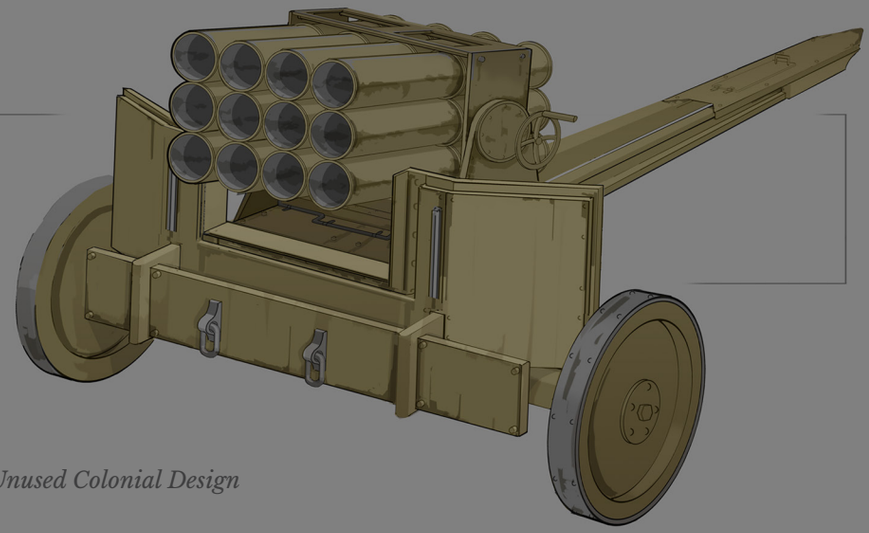

*Unused Colonial Design*

## Uniforms

When it came time to update the player characters and create a set of uniforms, we kept to the original vision for the project.

The player is just a cog in the machine, there are no heroes.

Winning the war was a group effort and we wanted to maintain that feeling.

*Legionary Fatigues*

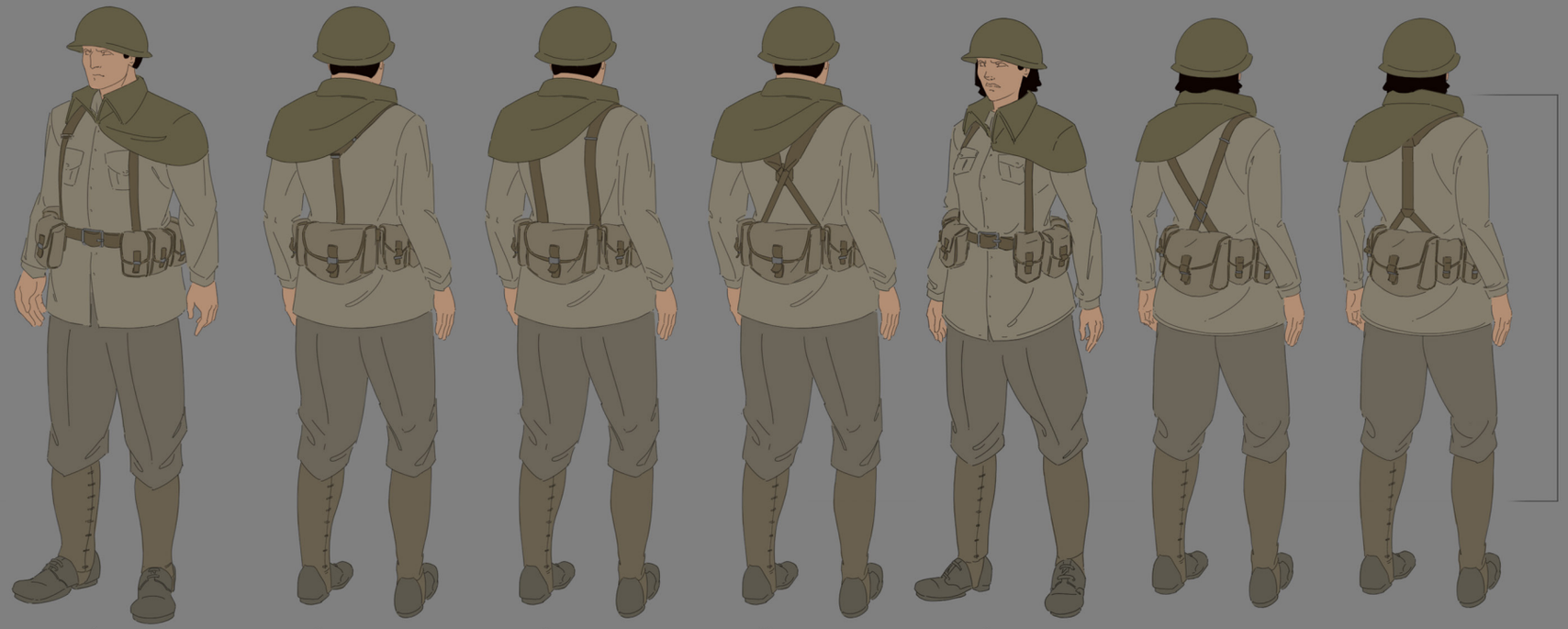

The 3D model for the soldiers outfit got a lot of scrutinising to make sure the shoulder straps and hip bags didn't alter the silhouette too much. There was an effort that the models looked less cartoony than previous versions.

*Infantry Battledress*

It was requested that the first set of uniforms should not alter the clothes, and just look like the soldier has different additional gear on them.

*Fabri Rucksack*

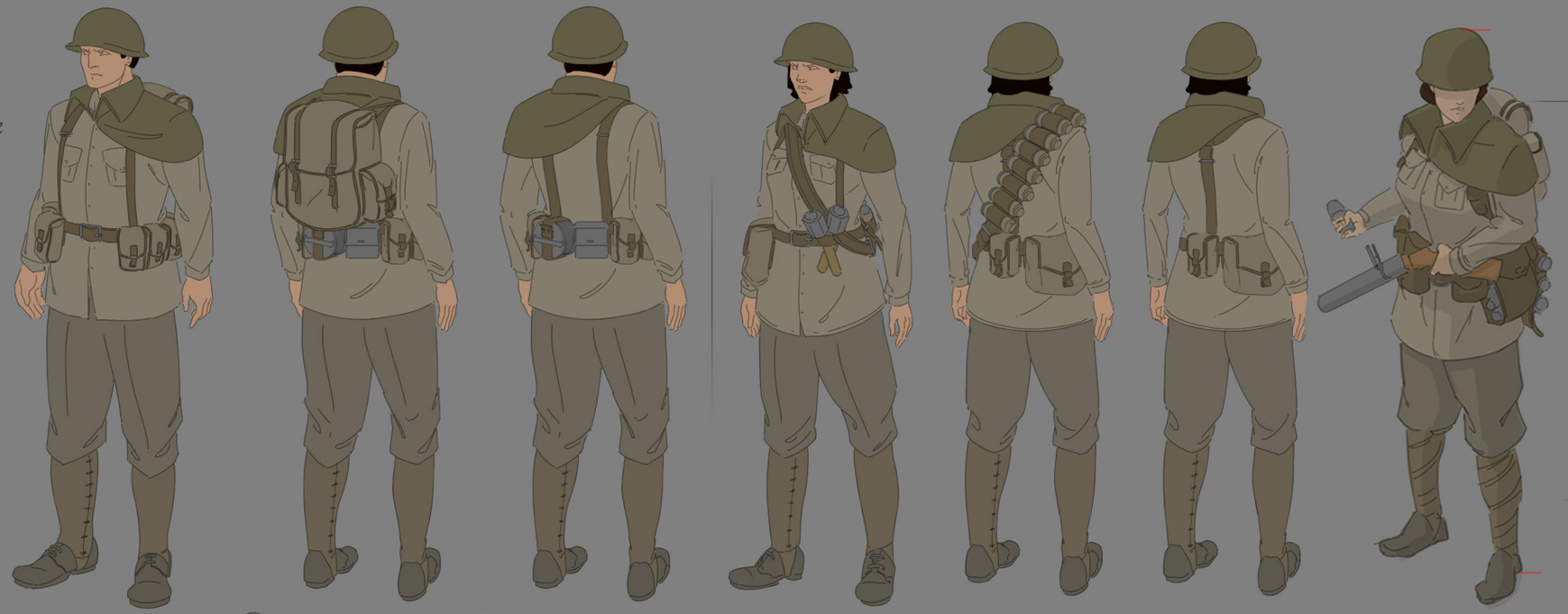

*Grenadier's Baldric*

*Sapper Gear*

*Specialist's Overcoat*

Faction asymmetry was limited to things like slight inventory alterations. The goal was to feel like you had a different kit on, but not to make it feel like a unique 'character'.

*Medic Fatigues Variants*

*Physician's Jacket*

We knew for the first set of uniforms that the medics would be important; standing out is the goal of a medic uniform.

The Colonial medic was harder to nail down, and members on the team were much more picky about that outfit.

The Colonial Scout Uniform originally didn't have a camo pattern. It was only added when we saw the concept in game, and felt it needed improving.

*Recon Camo*
*Pre Camo Pattern*

*Outrider's Mantle*

A set of chemical uniforms were designed, but have been delayed until changes to the smoke and gas systems have time to be reworked.

The Commander uniforms were an excuse to get more creative.

Some of the designs would influence Thea Maros' design later on.

*Officialis' Attire*

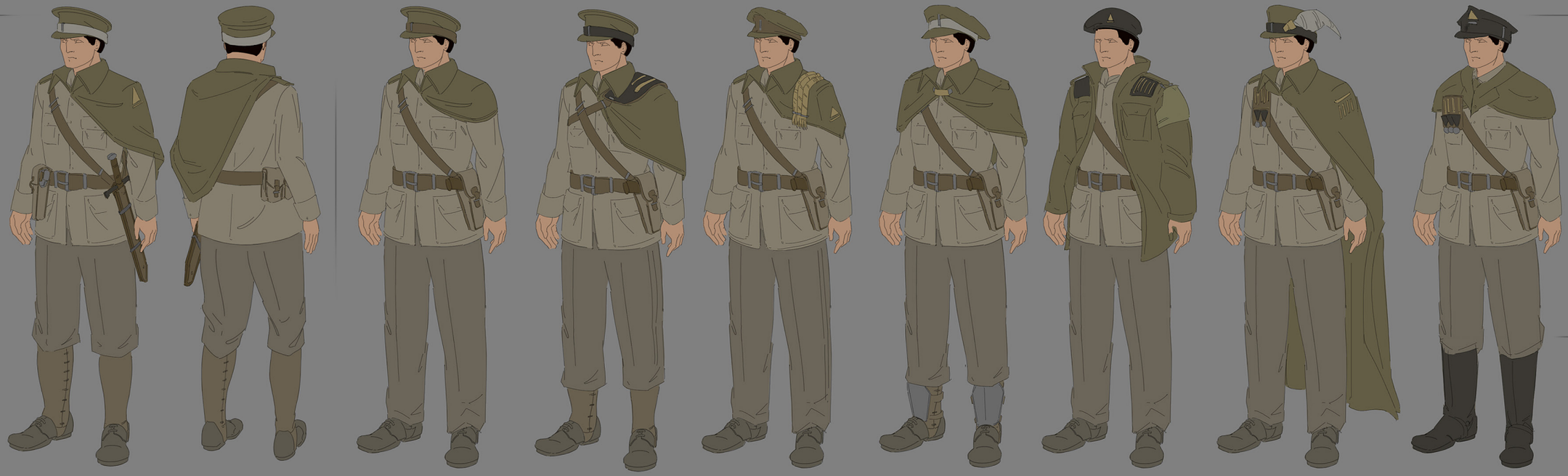

The Warden uniform was harder to nail down the final design. We had designed a Colonial officer in the game's first promo art which sped up that design.

*Officer's Regalia*

Weather uniforms were actually worked on a little ahead of the full uniform update. Not by a lot, but there was a period where we were exploring the weather system as a concept. The backpacks were part of the design because the base models still had them on.

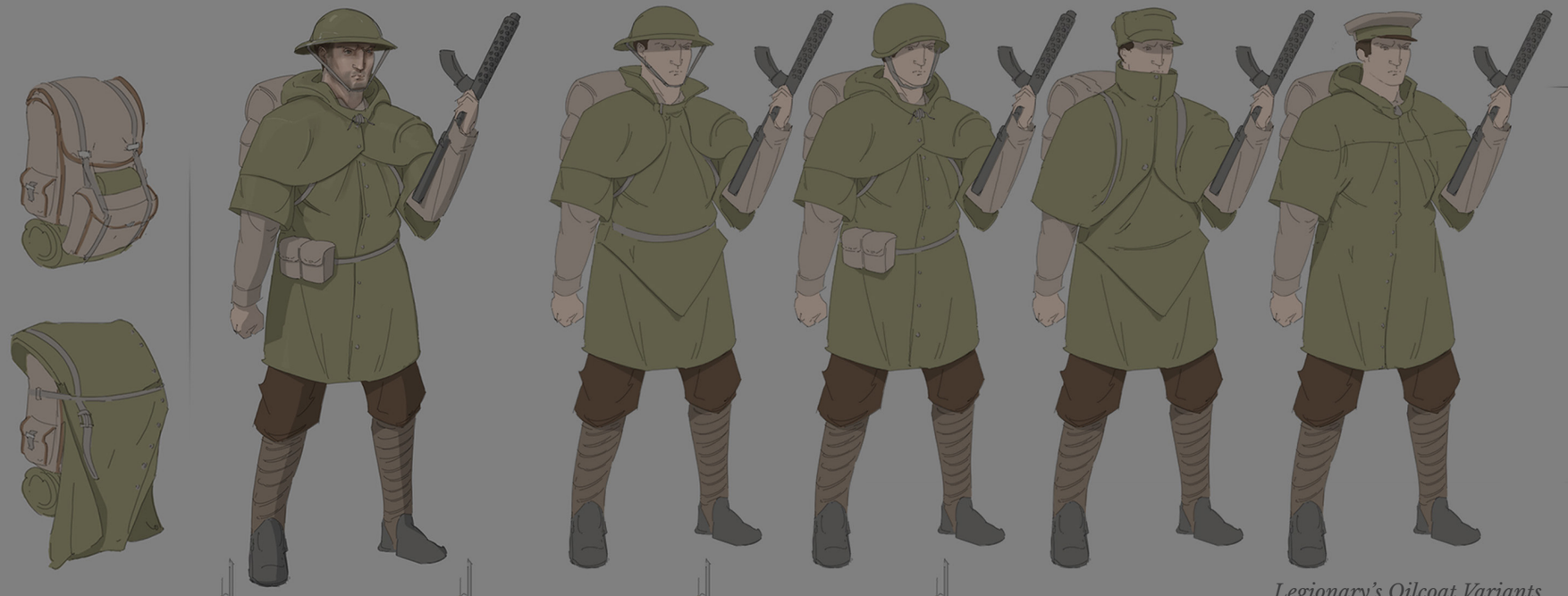

*Legionary's Oilcoat Variants*

*Caoivish Parka Variants*

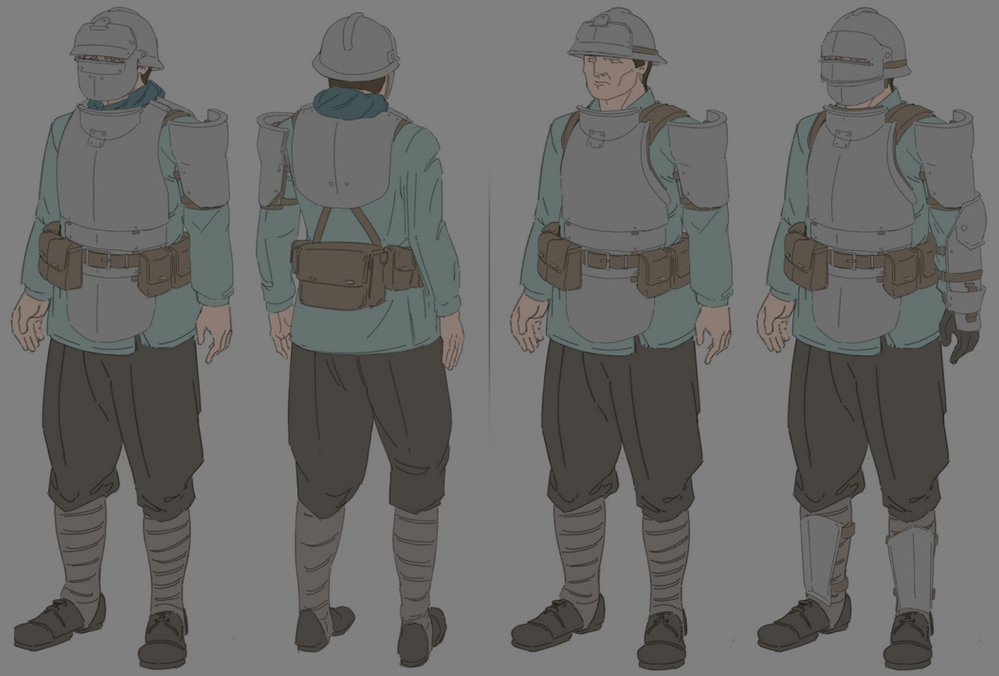

*Gunner's Breastplate Variants*

*Velian Flak Vest Variants*

The body armour was a design that we knew would stand out to players. The Colonial armour came from anti flak padding from pilot outfits. This was before we knew planes would be possible one day.

Both faction rain and snow uniforms were designed, but the Warden rain cape was never used.

*Unused Rain Cape*

*Heavy Topcoat Variants*

Both factions' uniforms were meant to look different from the default soldiers in order to sell your roleplaying to a different branch of your faction's armed forces. It just made sense when expanding the game into naval combat.

*Remex Garb*

*Gentleman's Peacoat*

The Warden uniform colours first proved too different and felt a little too close to the Colonial beige. It was later adjusted to blue.

*Cloudrunner's Vesture*

*Auster's Harness*

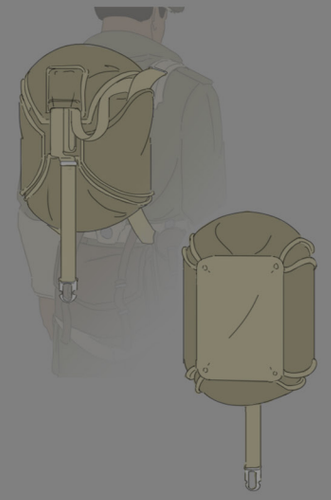

*Lodesman's Lorica*

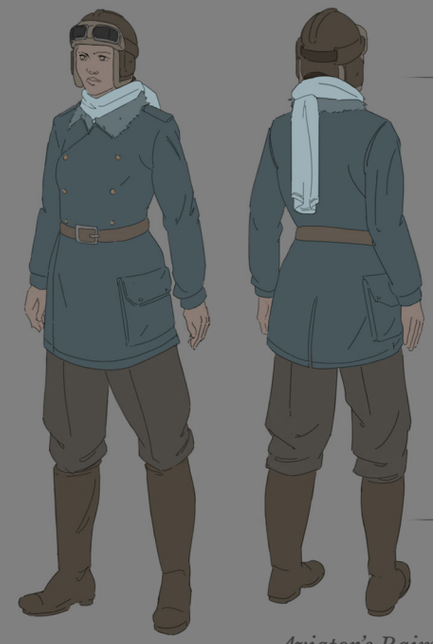

*Aviator's Raiment*

*Tankman's Coveralls*

*Padded Boiler Suit*

When we got to designing the pilot and paratrooper uniforms, a pitch to let them visually stand out from the normal soldier outfit was made. The idea was to help offset a proposed high cost with the rule of cool. Both paratrooper uniforms are themed after different British outfits.

When designing tanks, drawings of humans were added for scale. These drawings included outfit designs, which the team decided to fully implement.

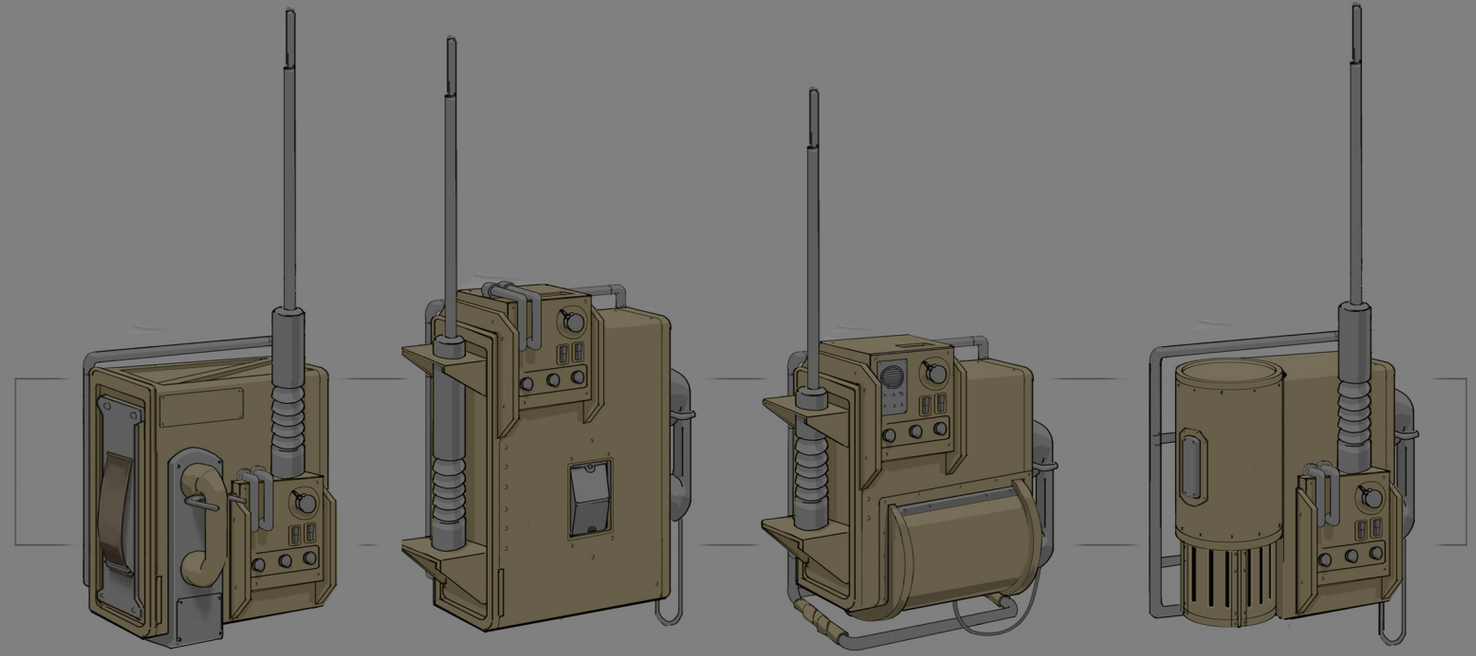

Early on, when the radio backpacks were a big new addition, it was thought that many different battlefield roles would be added with different backpacks. A number of different variations were designed, including the weather uniform backpacks seen earlier.

## Resistance Phase

A major interest of the game designers early in development was the idea to develop a mode called the “Resistance Phase”.

This new phase, which would start after each war, would explore what would happen after the war was won, and the winning side had control of the entire map. The losing faction would then play out a civilian uprising, giving players a fresh perspective on the battlefields that they themselves had built up.

Concepts for civilian resistance uniforms were designed, but never implemented.

*The Pitch Gun*

*KRF1-750 Dragonfly*

*Fuscina pi.I*

*Argenti r.II*

*KRR3-792 Auger*

*Volta r.I Repeater*

*KRR2-790 Omen*

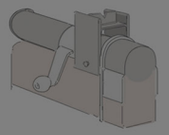

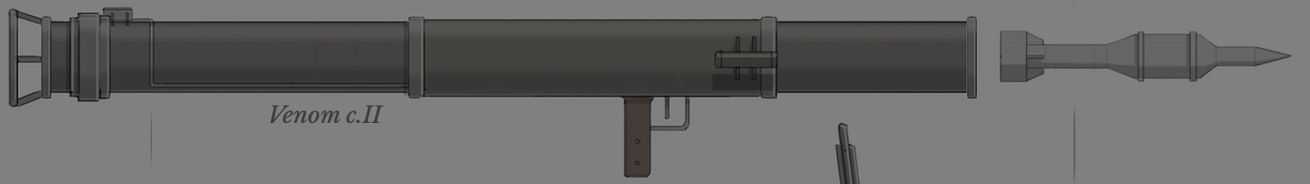

*Venom c.II*

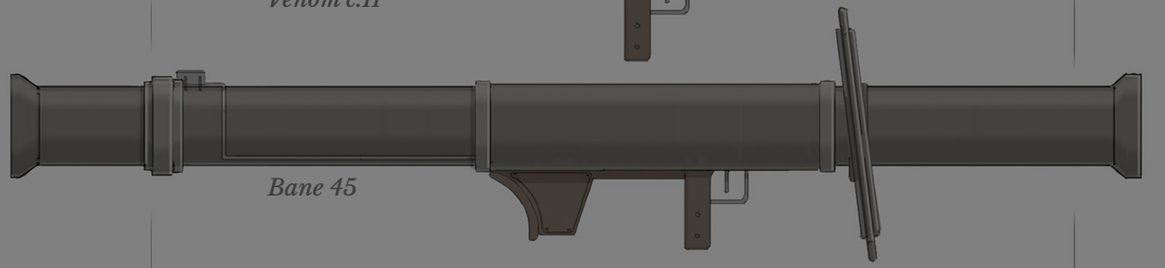

*Bane 45*

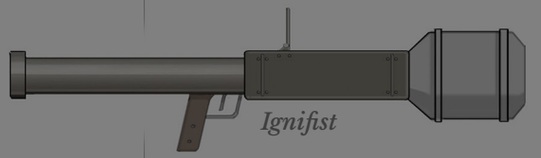

*Ignifist*

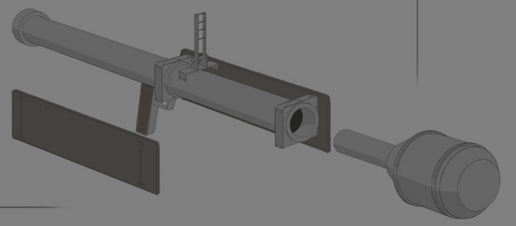

## Firearms

At the beginning of the project, the few guns in the game were borrowed from Fortified to get things rolling. Once the factions were more established and faction asymmetry was added, faction specific infantry weapons were added.

At first, most of the existing weapons were considered Warden, and a Colonial range of guns was designed. Unique to that moment in time, the cinematic camera had not yet been added into the game so the early concepts were a lot simpler, as you could not see much detail on the models.

As the Foxhole's development matured, both factions' firearms concept fidelity increased.

*Catena rt.IV Auto-Rifle*

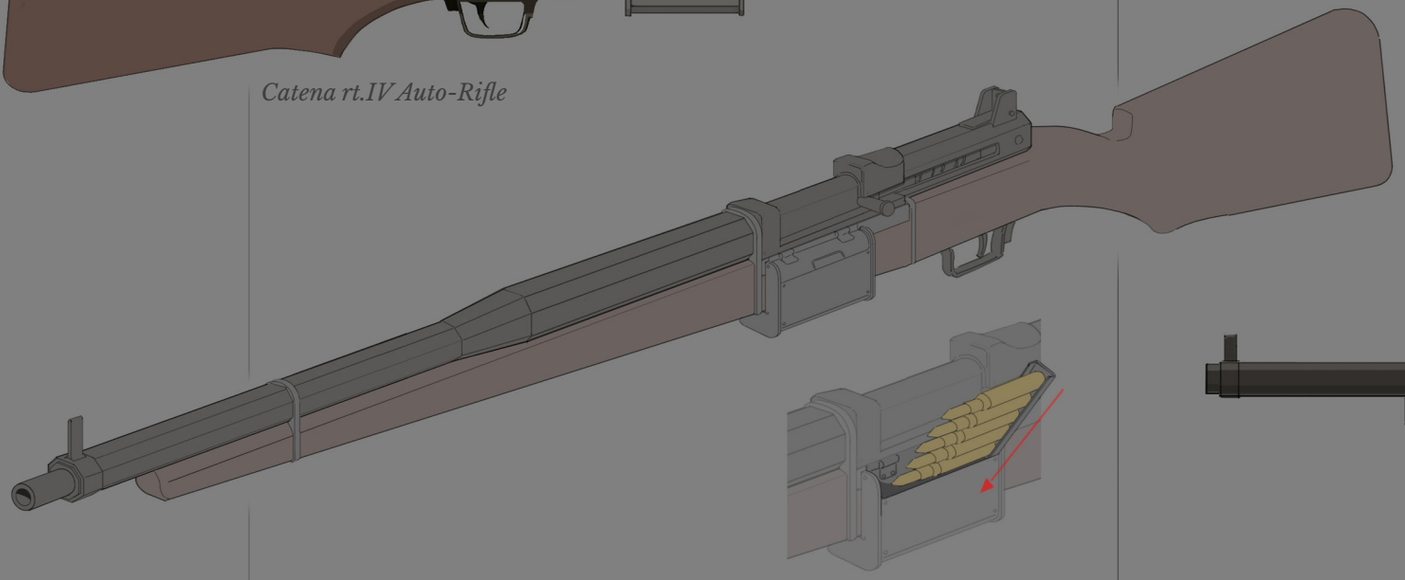

With a core concept in Colonial lore is that there are 16 states, when designing Colonial firearms we varied up key elements to imply multiple points of origin. The Lionsclaw SMG and Catena rifle's octagonal barrels were inspired by old Winchester rifles. The idea was to simply imply these were from a different manufacturer than the other rifles in the faction.

One of the major considerations for designing a firearm for the scale of our game was how the materials were breaking up the silhouette from the top down. Playing with areas of different metals and woods was one of the key tools at our disposal.

*Lionclaw mc.VIII*

*Dusk ce.III*

As each faction's small arms line up expanded, we decided to make faction specific textures for all the guns. It was as simple as darker metal and lighter wood for Colonials, and the opposite for the Wardens. It took more time for our modeler to update the textures than to make the decision.

At different times a few pitches have been made to add more pistols to the game for both factions. This has been a hard sell, as the nature of spawning into the game with a free pistol gives little incentive to add more. A few times a flare gun has been suggested, which is usually the first cut from a pitch. The added complexity to implement the feature often pushes it to a low priority.

When designing the Dusk Assault Rifle, there was an idea it could fire different ammo types. This changed to an idea of sister guns, the 'Dusk' and 'Dawn'. The idea was dropped, but later when new 20mm infantry guns were needed, we reused the names from the original idea.

*Unnamed Pistol designs*

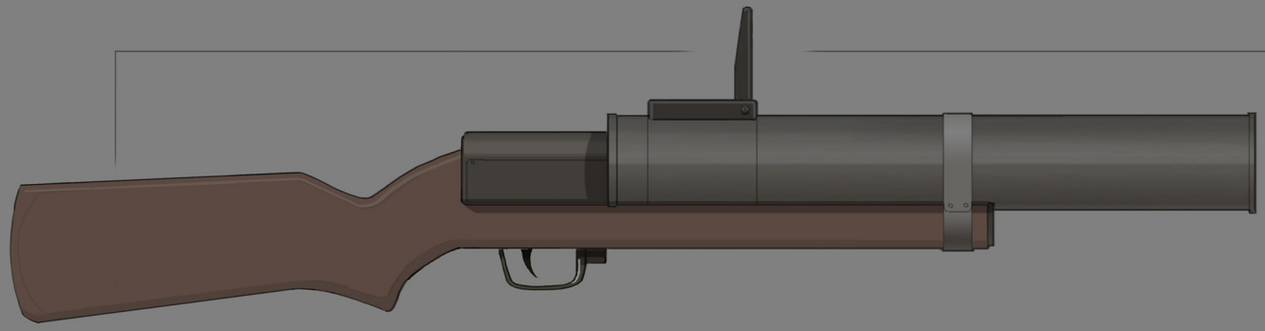

*KLG901-2 Lunaire F*

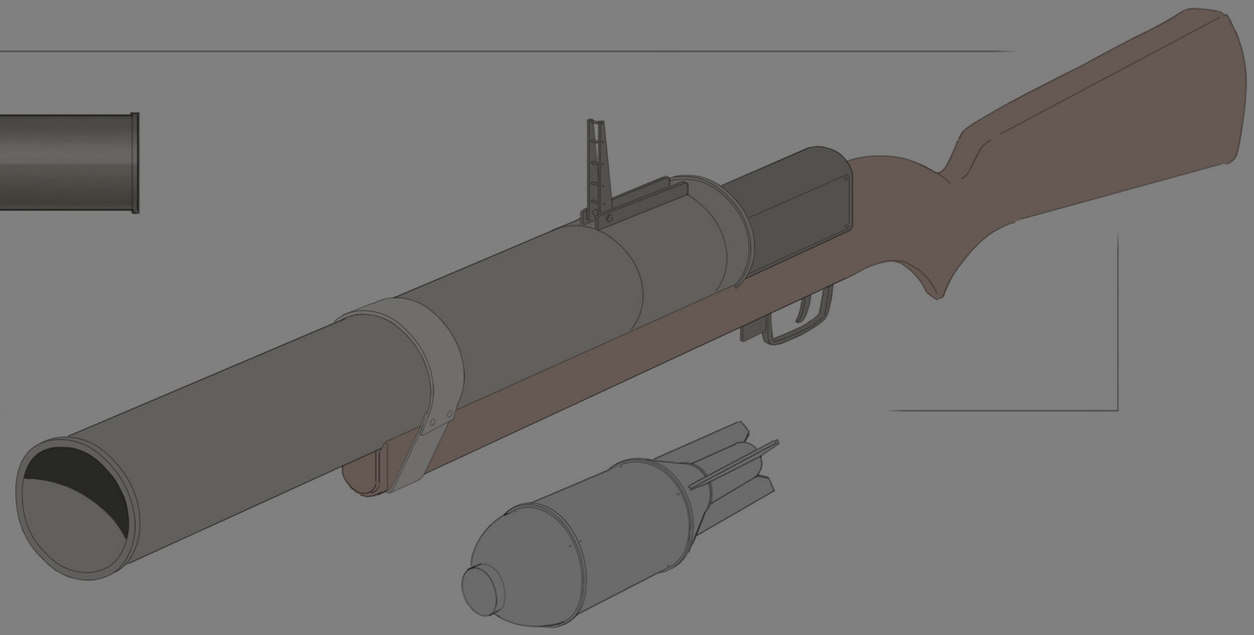

When grenades became faction specific, we were also exploring the idea of weapon variants. An upgraded shotgun idea later became a proper Colonial grenade launcher.

*Unnamed designs*

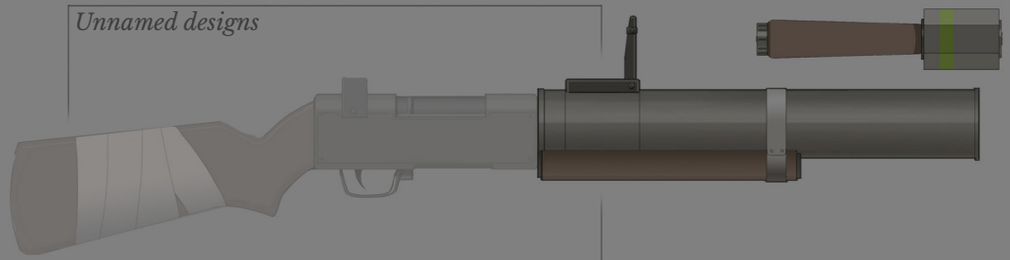

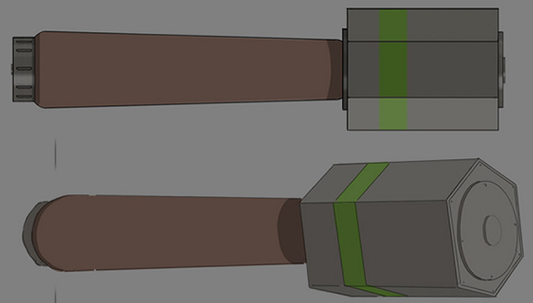

*Bomastone*

With the Colonials having a uniform that let them carry more grenade ammo, the idea to give them a dedicated launcher, and give the Wardens the existing grenade attachment for rifles was made.

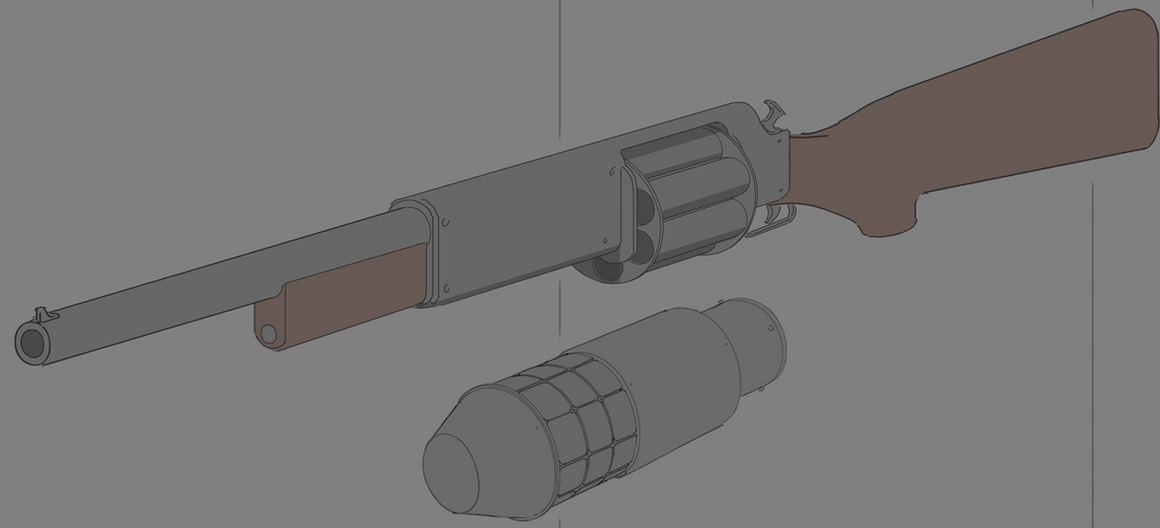

*Unnamed designs*

As the idea for tripods evolved we saw the need to expand the machine guns with light, medium and heavy weapons creating distinctions in bipods, small tripods attached to guns, and large two man team tripods that required set up.

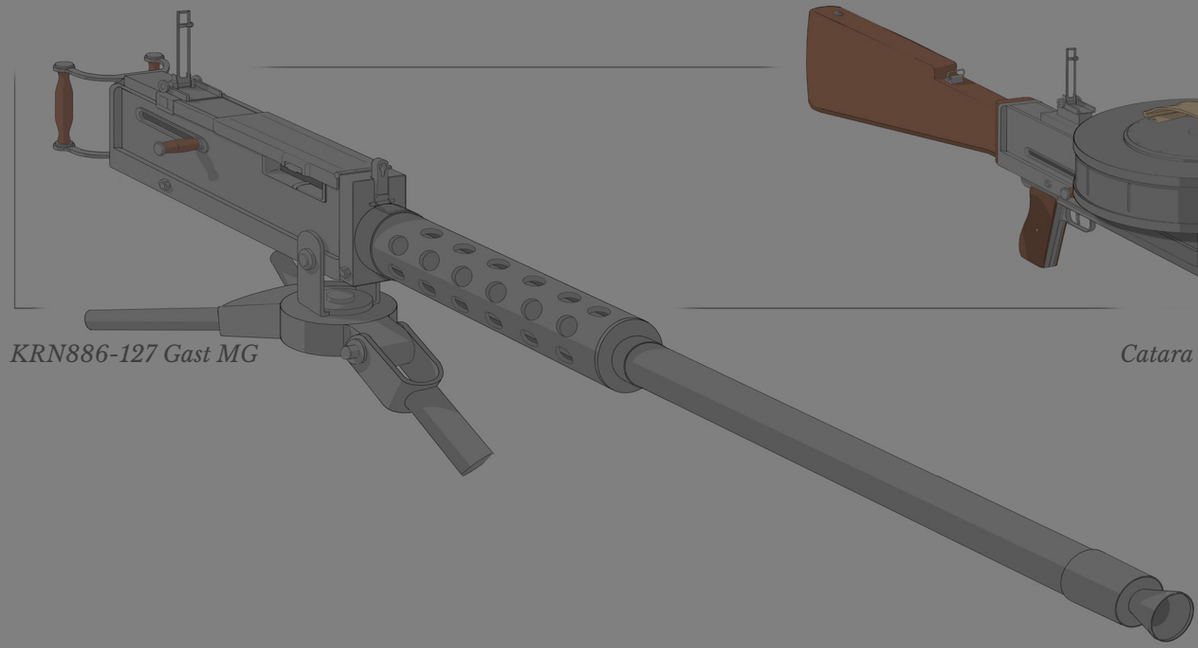

*KRN886-127 Gast MG*

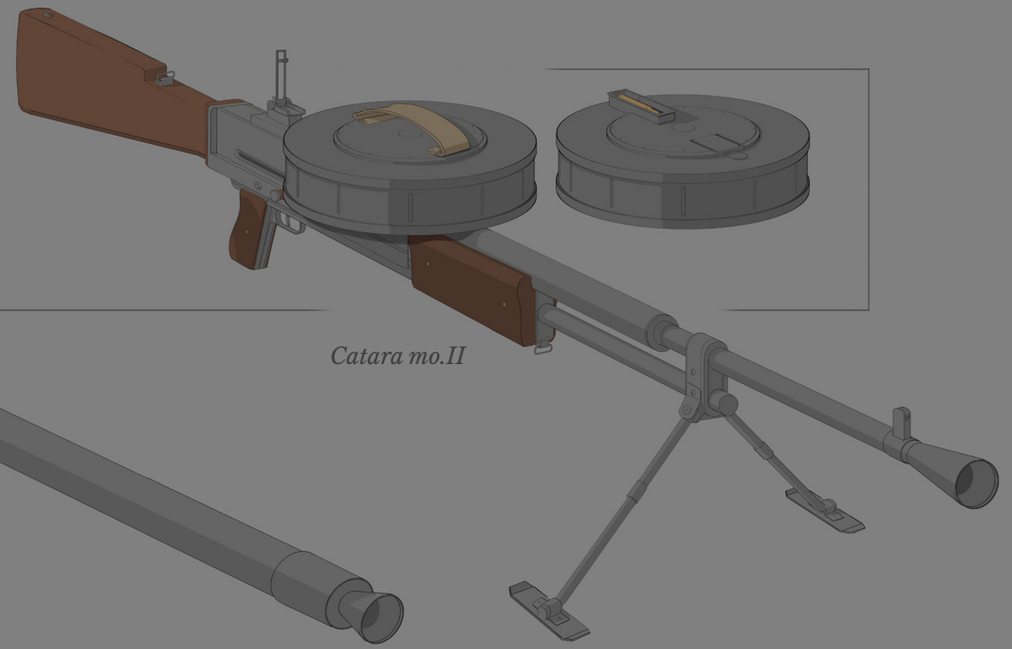

*Catara mo.II*

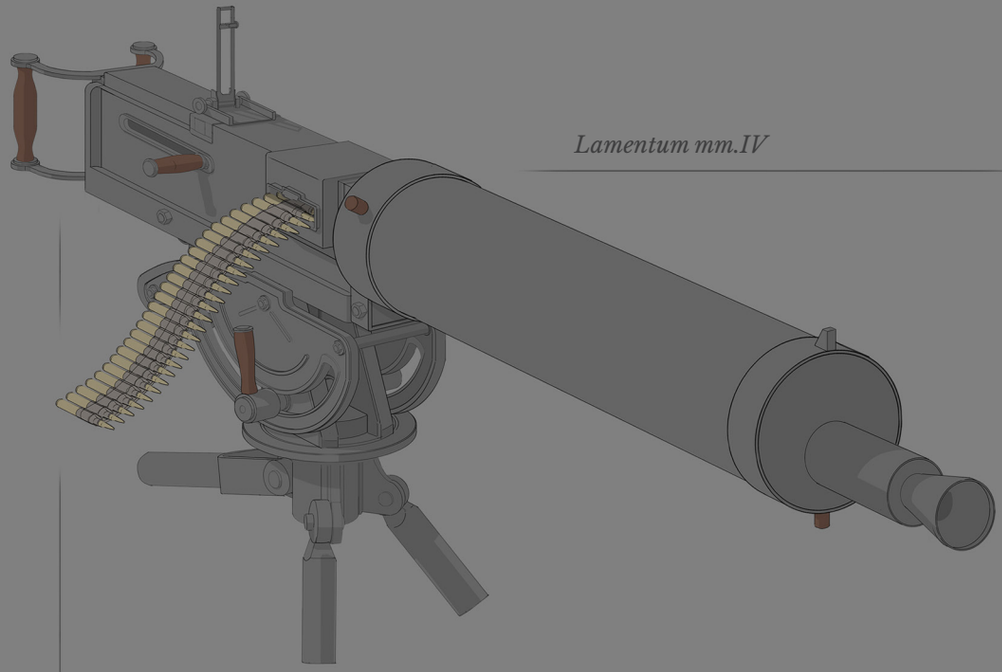

*Lamentum mm.IV*

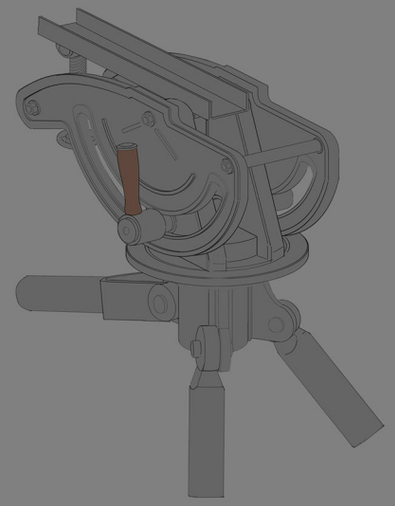

The latest firearms added into the game came with the addition of a new facility building for upgrading guns. It was also recognized that infantry needed new ways to engage amoured vehicles as the war went on. The task was to expand the roster by adding large caliber rifles that, while less realistic, were fun to use. For the concept artist this was a fairly open ended task, which is the kind we enjoy.

Luke was in charge of the Colonial side. An AT sniper rifle and assault rifle were selected. Part of the selection process was to identify a few guns that were either already being made a lot, or were the least favorite guns of the faction. It was thought players would like to upgrade the guns they already have and will try out guns they don't normally use if they want to upgrade to the new options.

*Dawn Ve.II*

Inspired by the MG 34 with a saddle drum, the Dawn rifle had to be changed. The gun clipped too much into the player model.

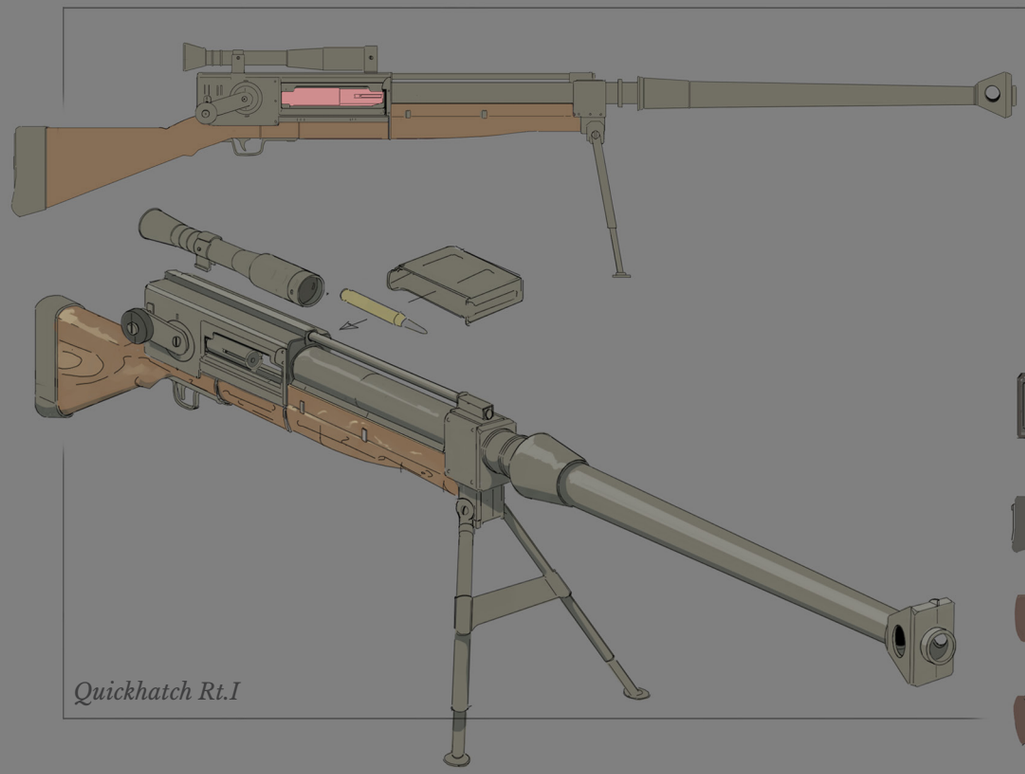

*Quickhatch Rt.I*

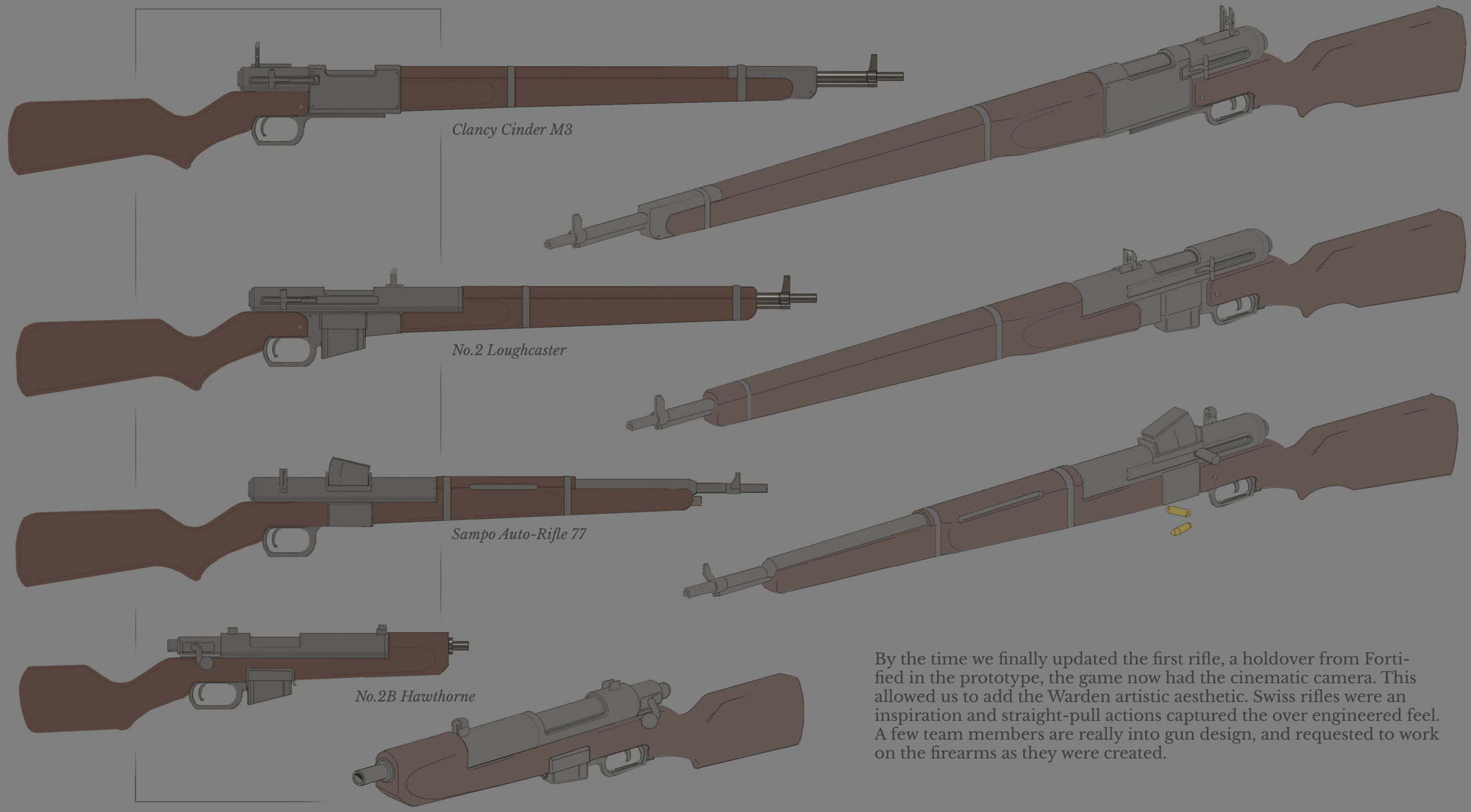


By the time we finally updated the first rifle, a holdover from Fortified in the prototype, the game now had the cinematic camera. This allowed us to add the Warden artistic aesthetic. Swiss rifles were an inspiration and straight-pull actions captured the over engineered feel. A few team members are really into gun design, and requested to work on the firearms as they were created.

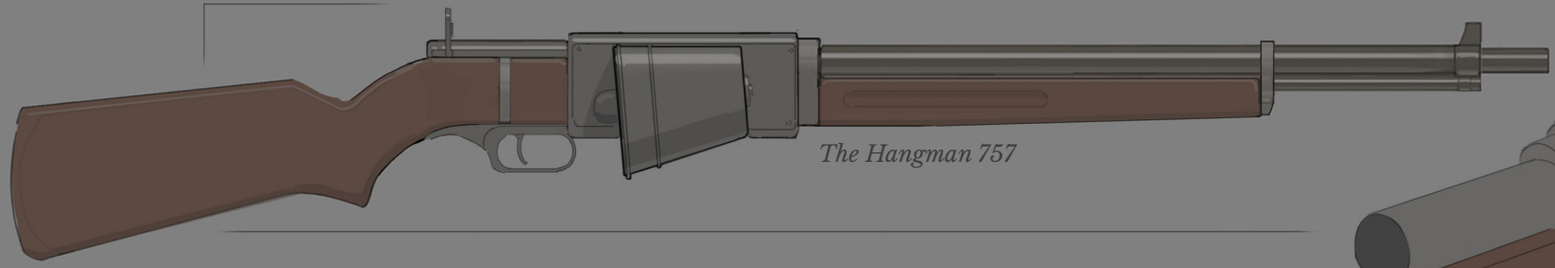

*The Hangman 757*

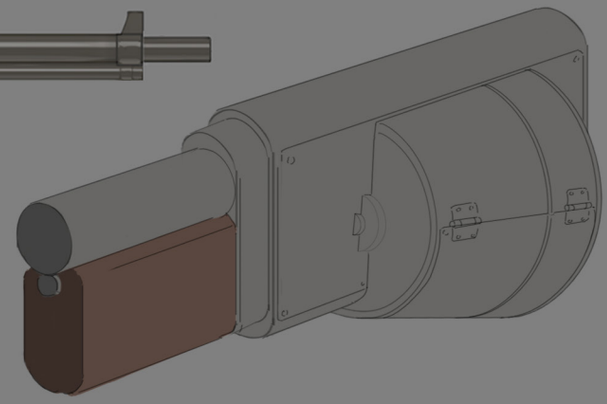

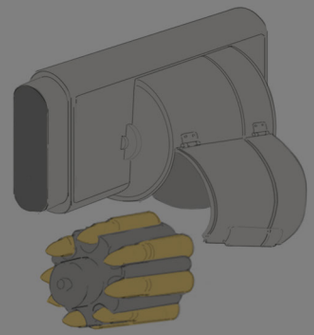

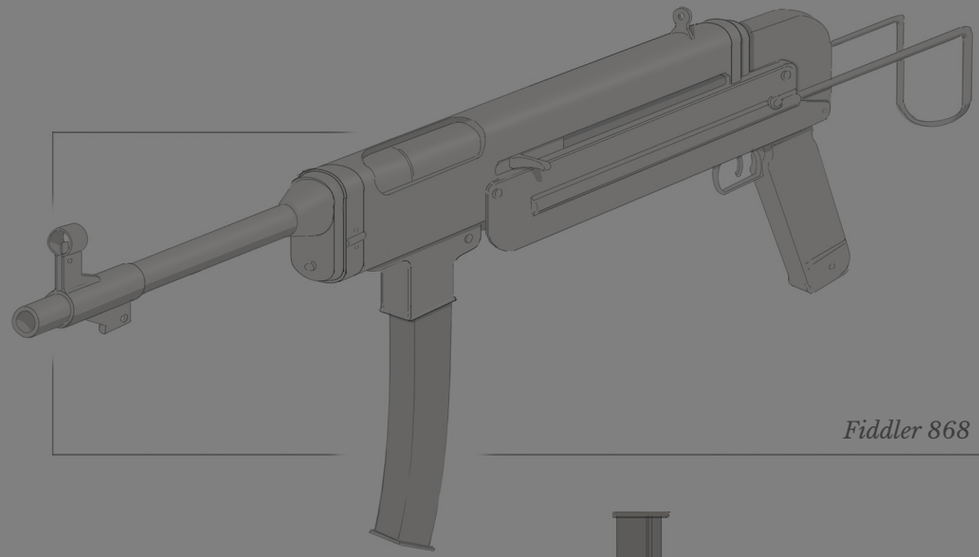

*Fiddler 868*

With asymmetry in full effect, a revolver rifle was designed as the Wardens' use for the revolver ammo.

The Fiddler SMG was a favorite of both factions before it became Warden specific. A simple visual redesign was made. We don't know if a lot of players noticed at the time.

The Liar SMG was fun. A example of Warden design gone to far making something ugly. Inspired in part by the Owen gun and Lanchester SMG.

*The Liar*

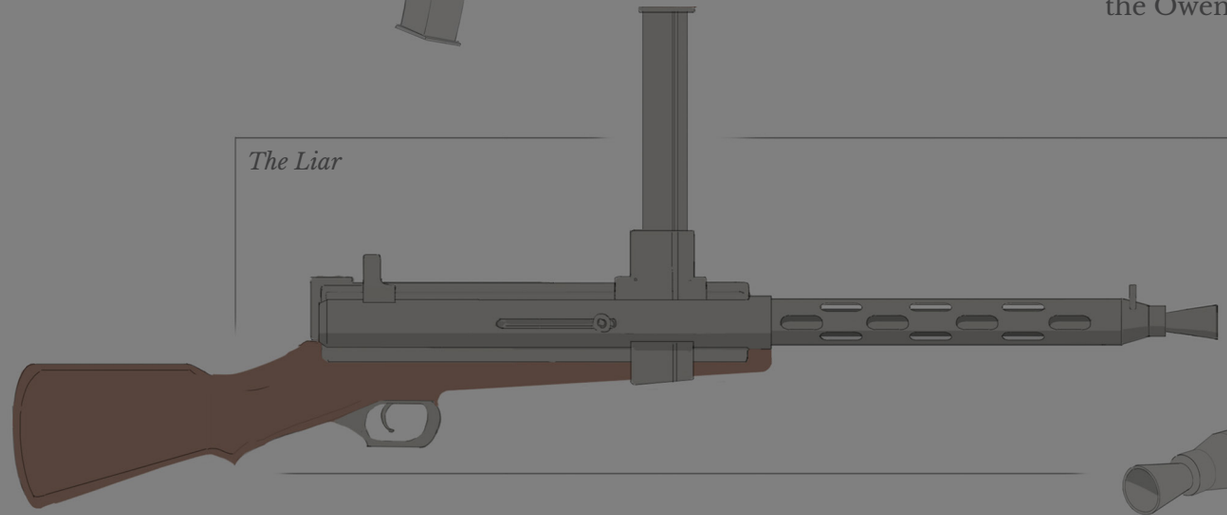

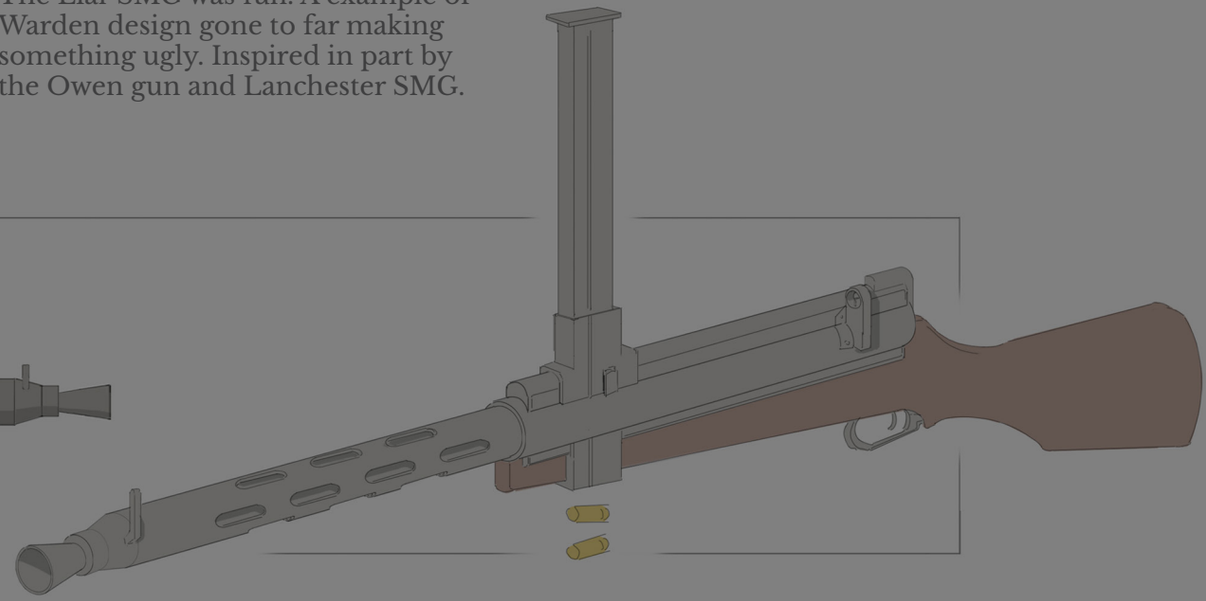

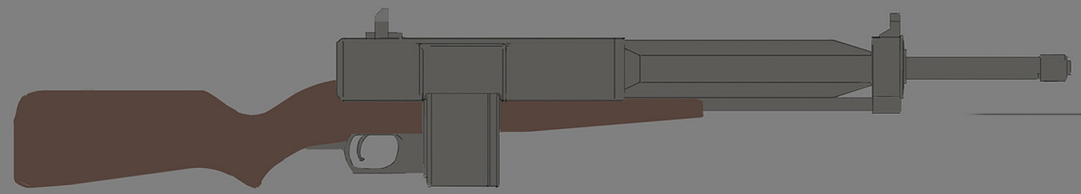

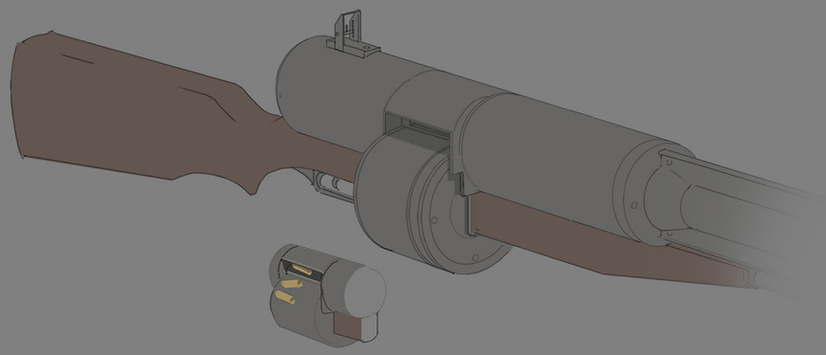

*Booker Storm Rifle Model 838*

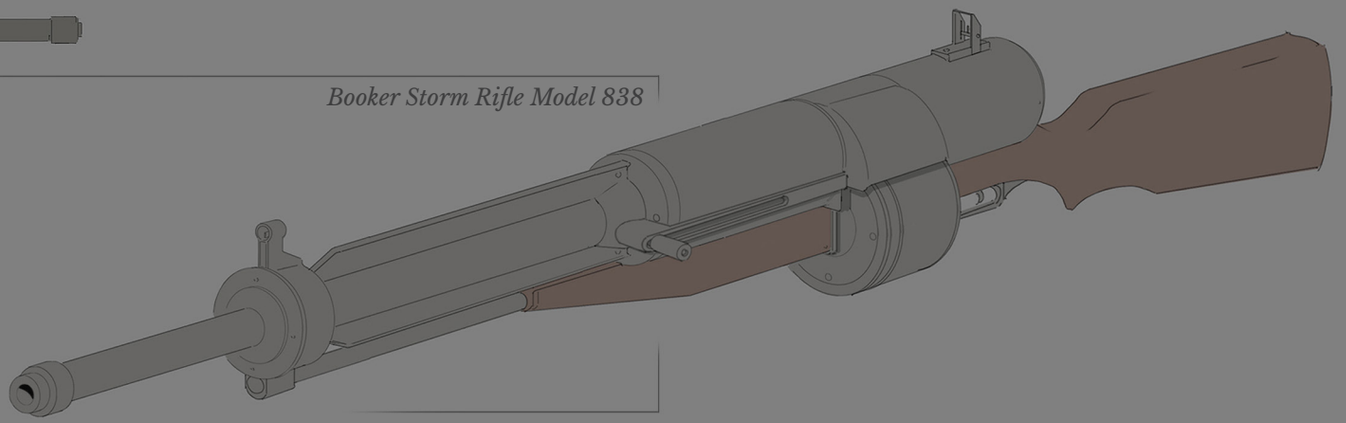

Inspired by the Huot and the St Etienne Mle 1907, the Booker Rifle was originally a slow firing assault rifle and changed to a burst rifle at the last moment. When the new weapon upgrading system was added, the Booker rifle was the first gun thought of to upgrade and make its original vision.

*The Booker Rifle was named after my Greyhound dog, Booker. - Julian*

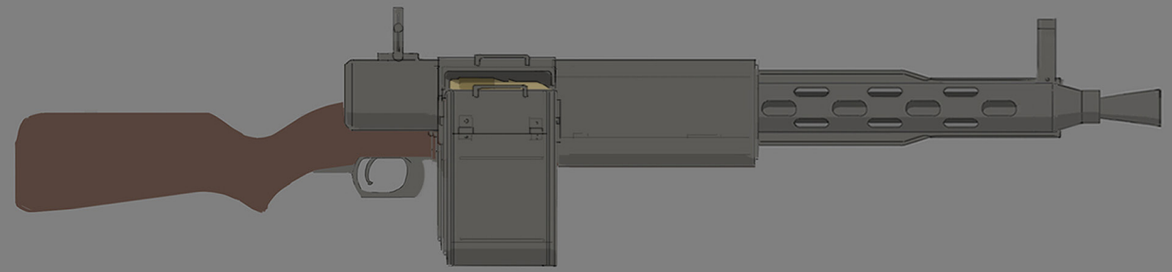

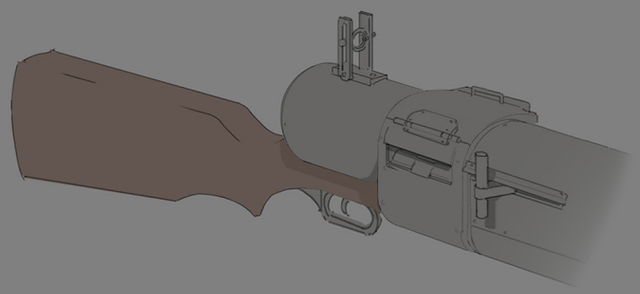

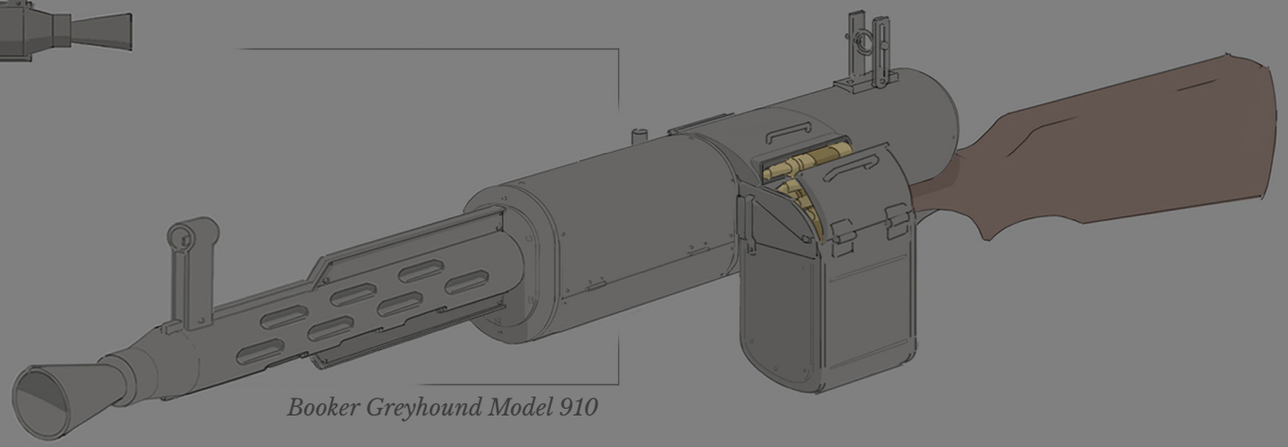

*Booker Greyhound Model 910*

*Ahti Model 2*

Shotguns proved hard to balance and were nerfed or removed from the game for a long time. Either they were too powerful and took over the meta, or they were underpowered and useless. It has taken a long time to find their place in the game.

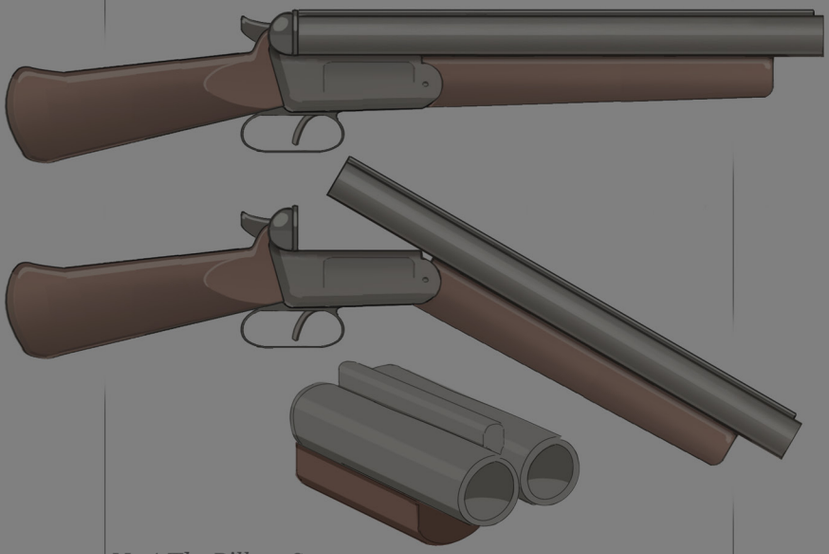

*No.4 The Pillory Scattergun*

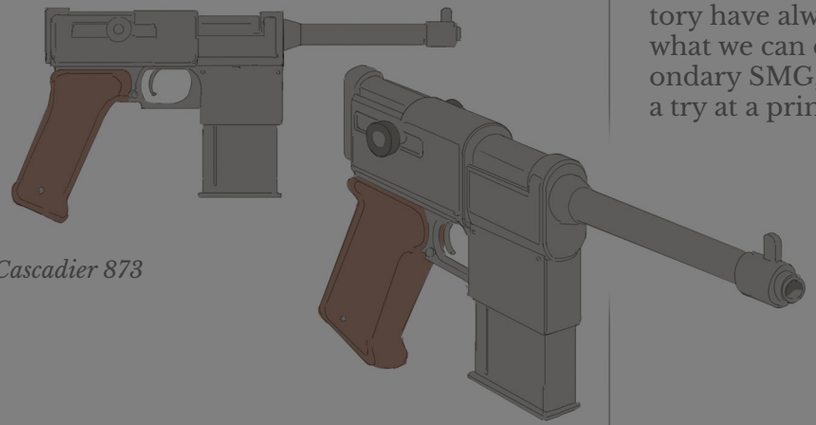

*Cascadier 873*

The first and second weapon slots in the player inventory have always been fun to explore,  pushing ideas of what we can do with firearms and ammo types. Secondary SMG, shotguns and rifles were interesting, and a try at a primary pistol has always been tempting.

There have been a few pitches to make pistols more varied and exciting. One of note was an idea to have different pistols in your starting kit, depending on which region of the map you spawn in. To sum up the pitch; players on the west side of the map would get a different variant of pistol to those on the east.

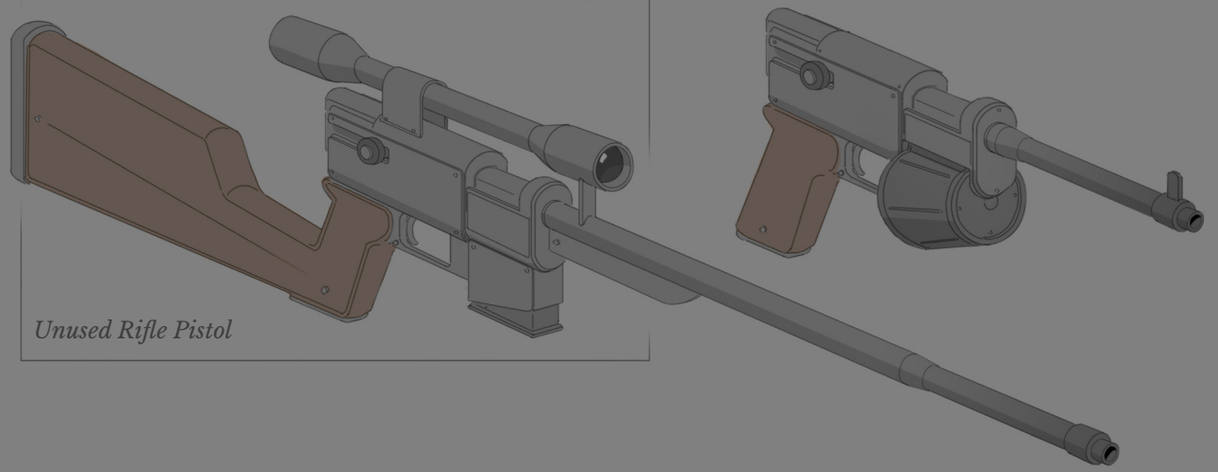

*Unused Rifle Pistol*

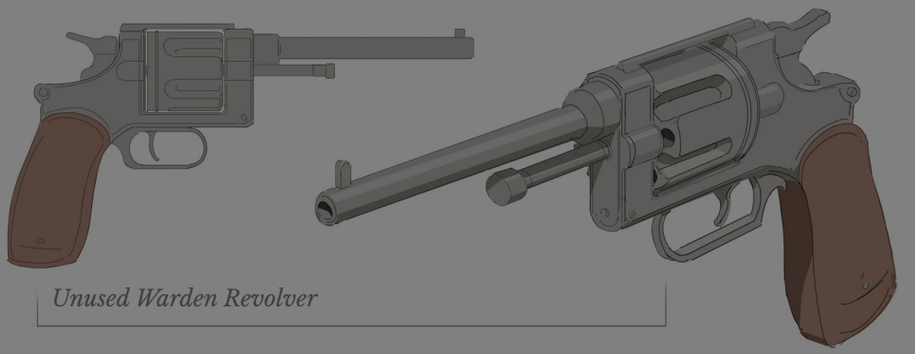

*Unused Warden Revolver*

The name Storm rifle, Storm tank and Storm cannon were all part of an early theming when the game was much smaller. It's now a bit of a joke in the studio.

The in-game Storm Rifle model has the ammo magazine on the 'un-optimal' side. Early in development, detail was minimal and the silhouette was more noticeable this way. If designed today, it would be the correct way around. - Julian

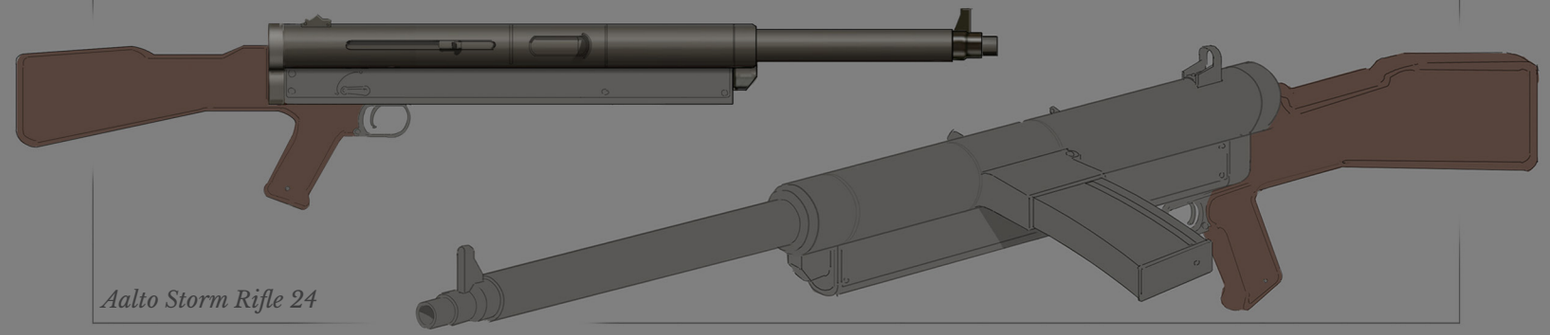

*Aalto Storm Rifle 24*

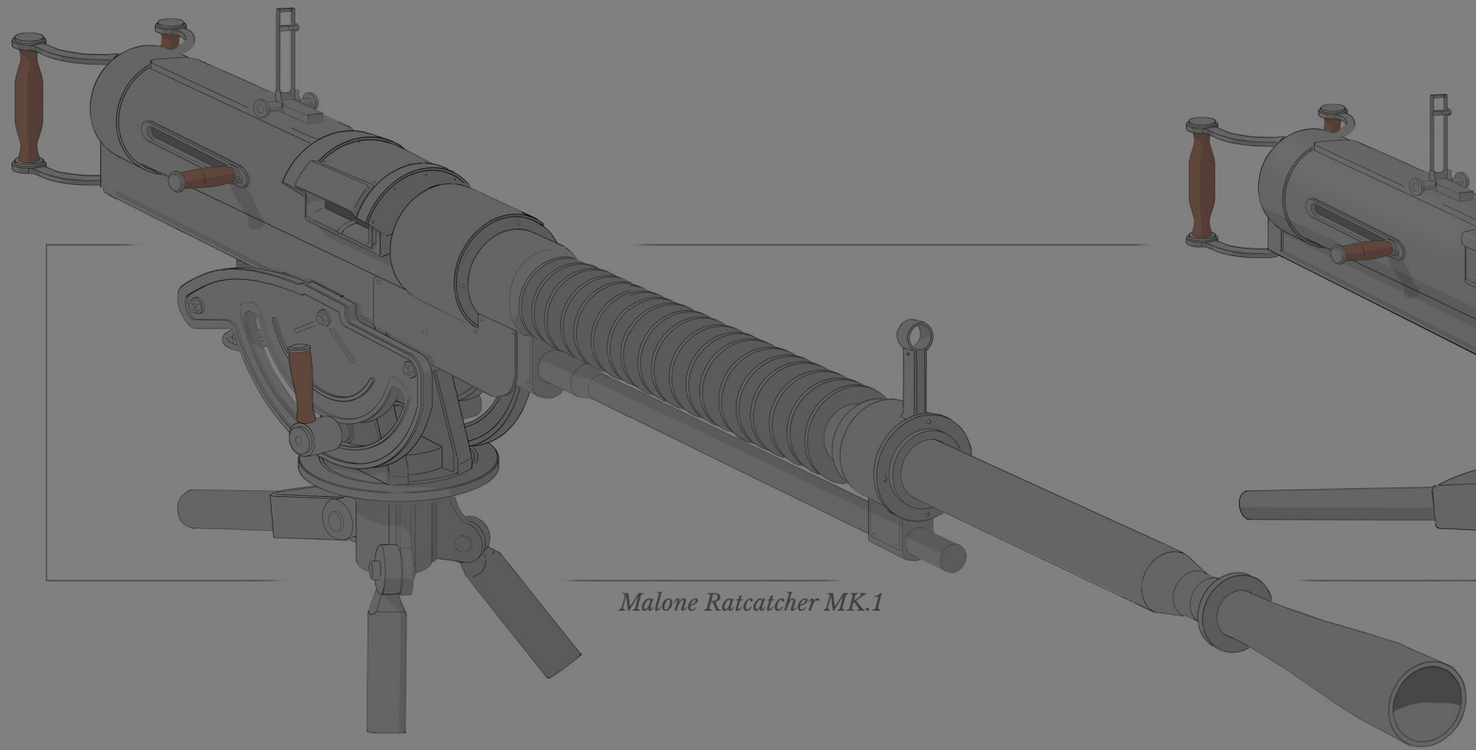

*Malone Ratcatcher MK.1*

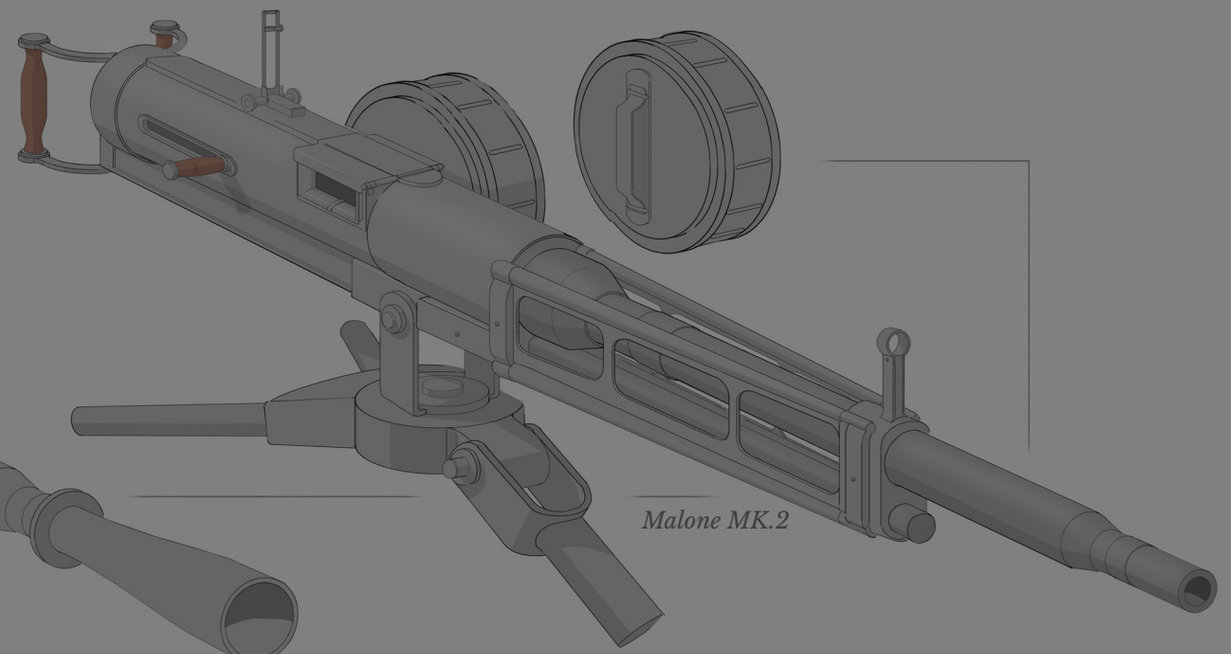

*Malone MK.2*

*Neville Anti-Tank Rifle*

During the push to add more 20mm infantry guns, we upgraded the Neville Rifle with a recoilless rifle grip based on the Carl Gustav m/42 to create the distinct Satterley Storm Rifle. The magazine was later changed to a drum to make the gun look a little lighter.

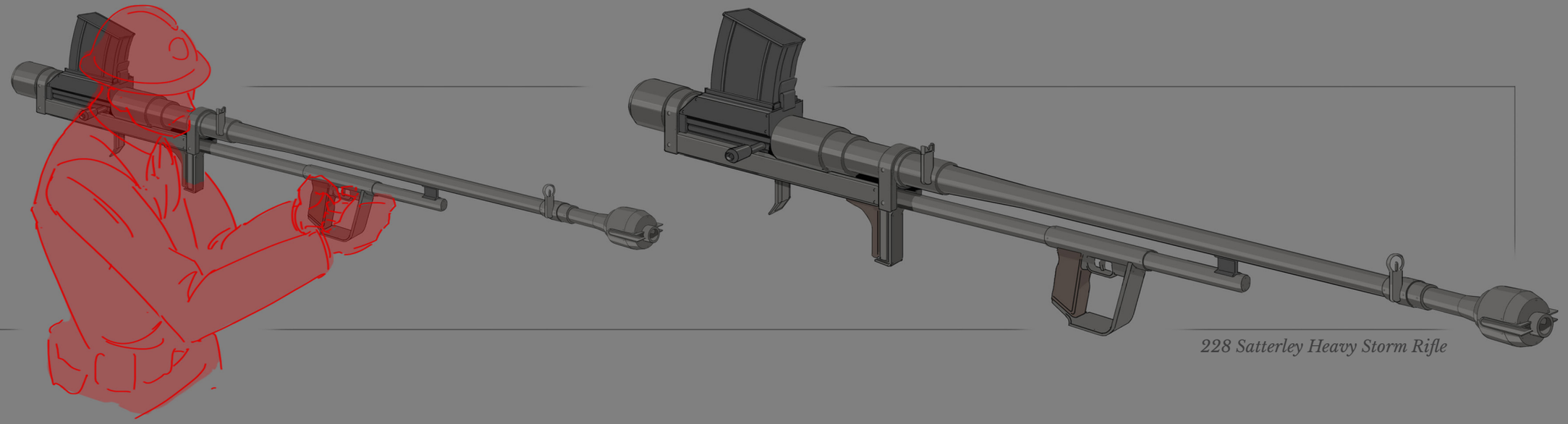

*228 Satterley Heavy Storm Rifle*

The PIAT launchers were a bigger step into infantry asymmetry, as it was a custom new ammunition type for the Wardens. The Colonial's had AT RPG shells, and the Wardens needed something.  At the time we pushed to make a distinct feel for how each faction's infantry fought vehicles.

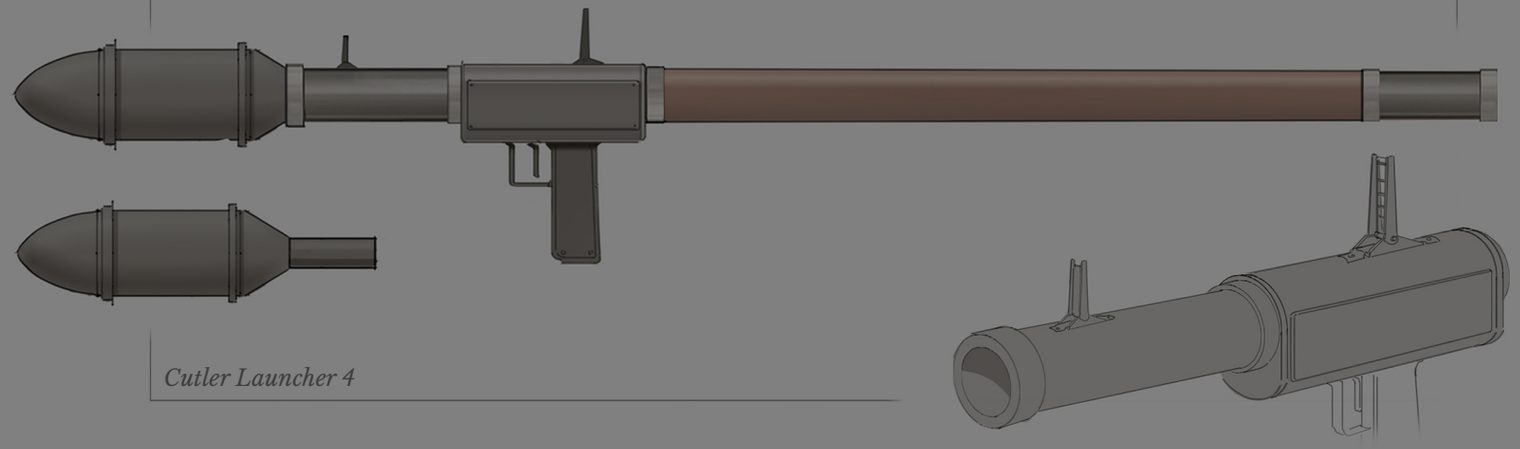

*Cutler Launcher 4*

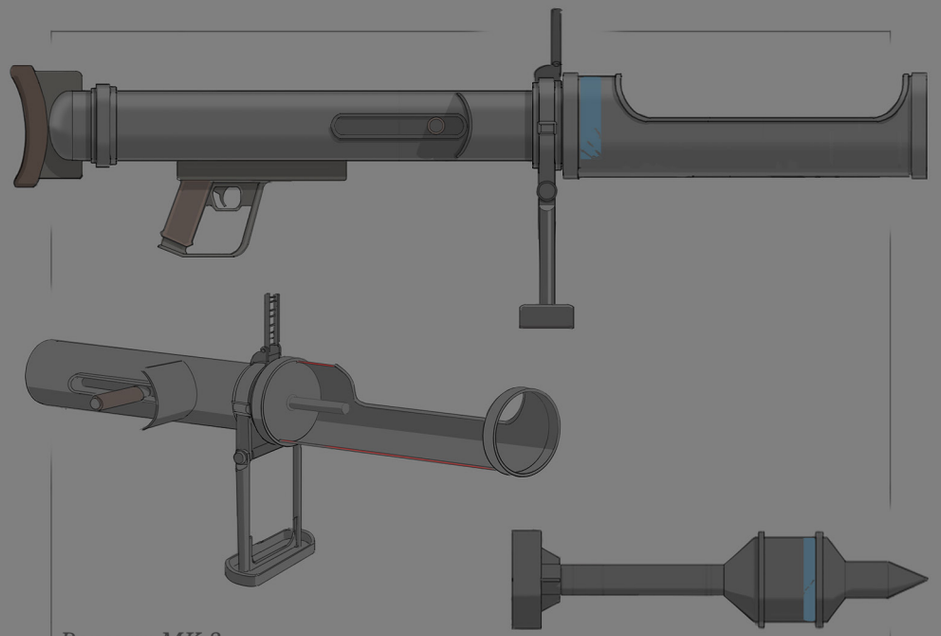

*Bonesaw MK.3*

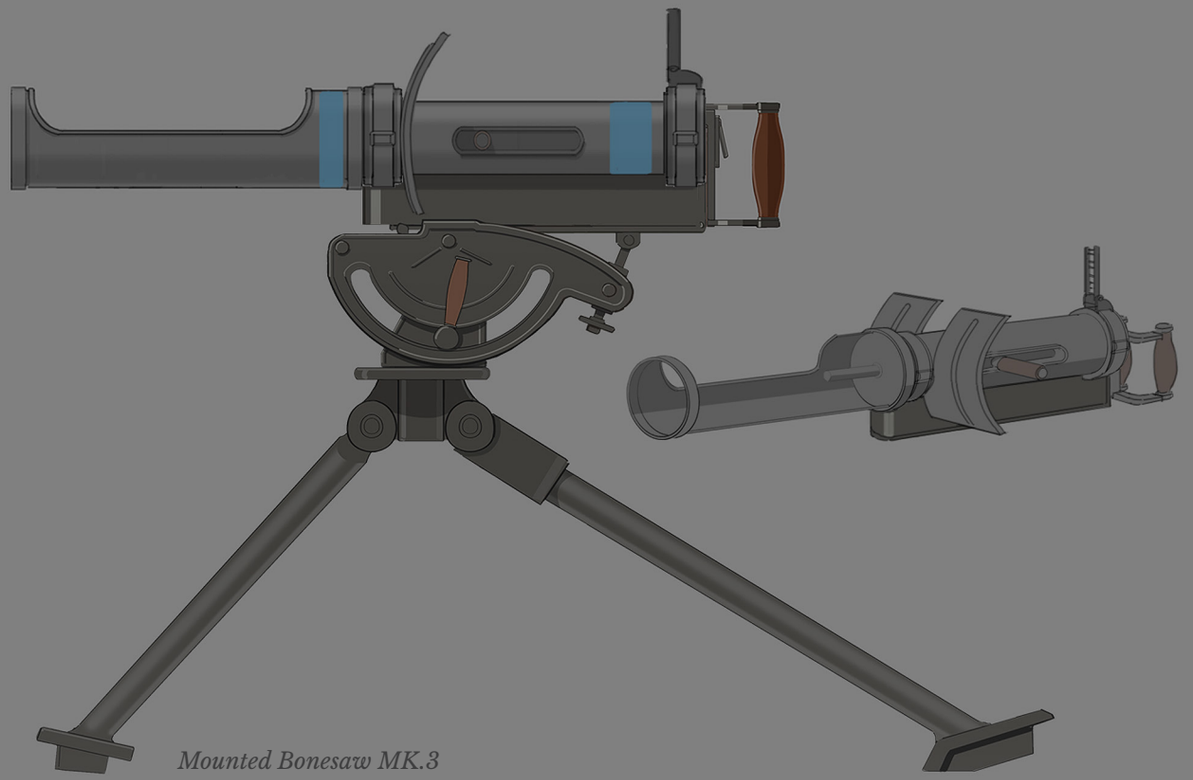

*Mounted Bonesaw MK.3*

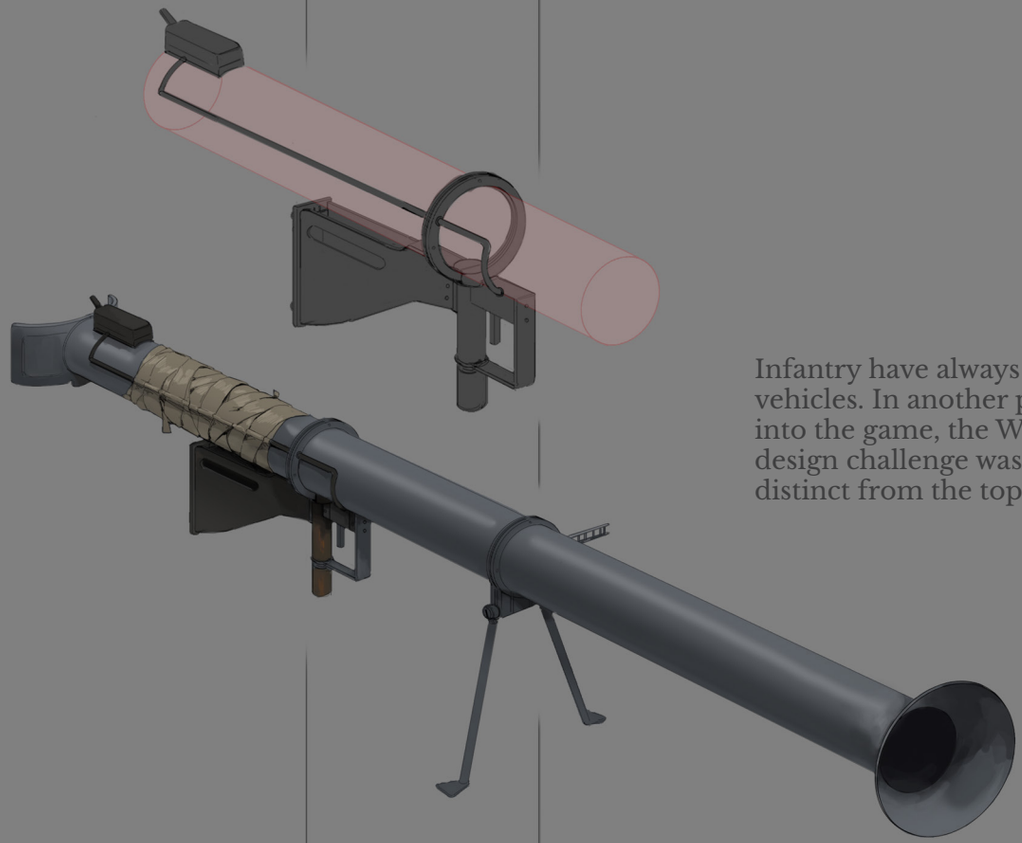

Infantry have always needed more options for fighting vehicles. In another push to add some symmetry back into the game, the Wardens got their AT RPG. Lukes design challenge was to make another tube shape look distinct from the top down.

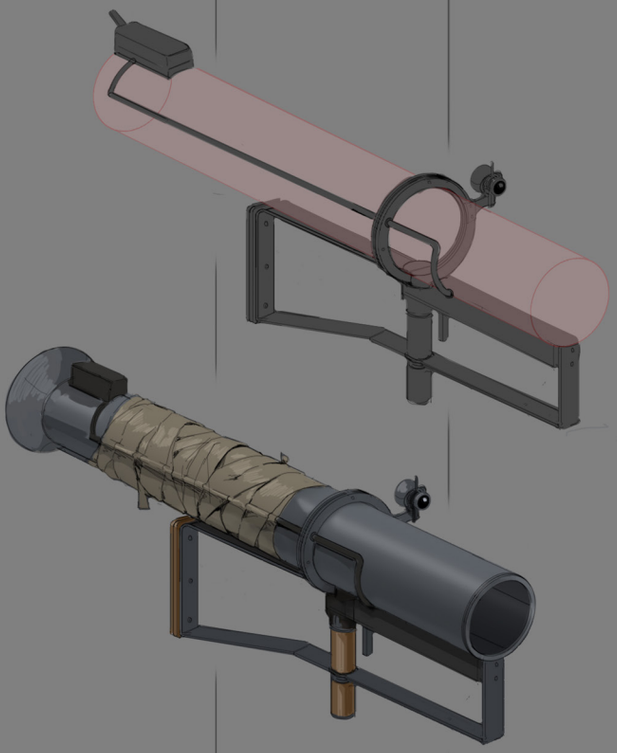

*Carnyx AT Rocket Launcher*

*Unused Variant*

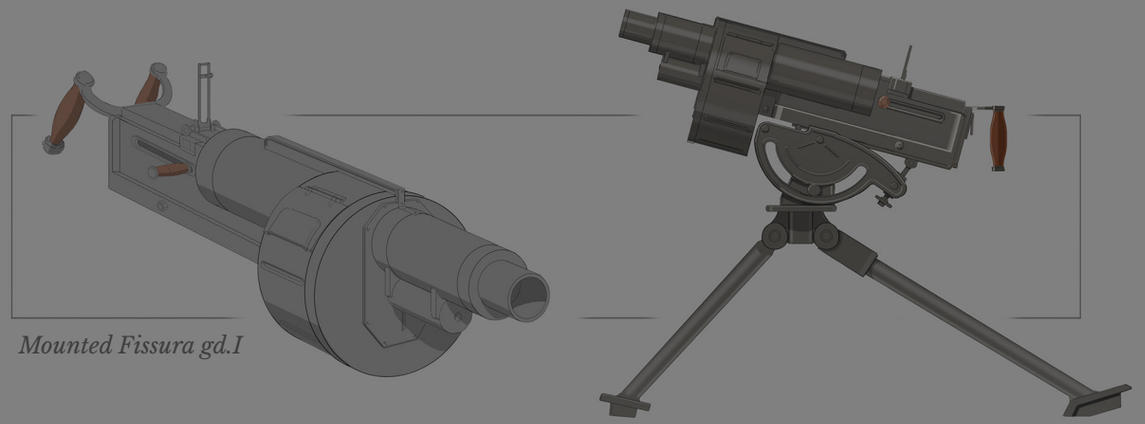

*Mounted Fissura gd.I*

Immediately after the tripods were added to the game and the gameplay loop was established, there was a need for more content for them. The Grenade launcher, Rocket Launcher, AT Rifle and infantry support gun were all designed without a faction in mind then divided up by the game designers.

The Foebreaker concept had a single launch tube and ammo box configuration. The idea was you could load more rockets into it than the original limit of three. At the time, one of the game designers didn't think it made sense and had a specific ask to add a second barrel. It was a last minute change, but turned out to have an iconic look.

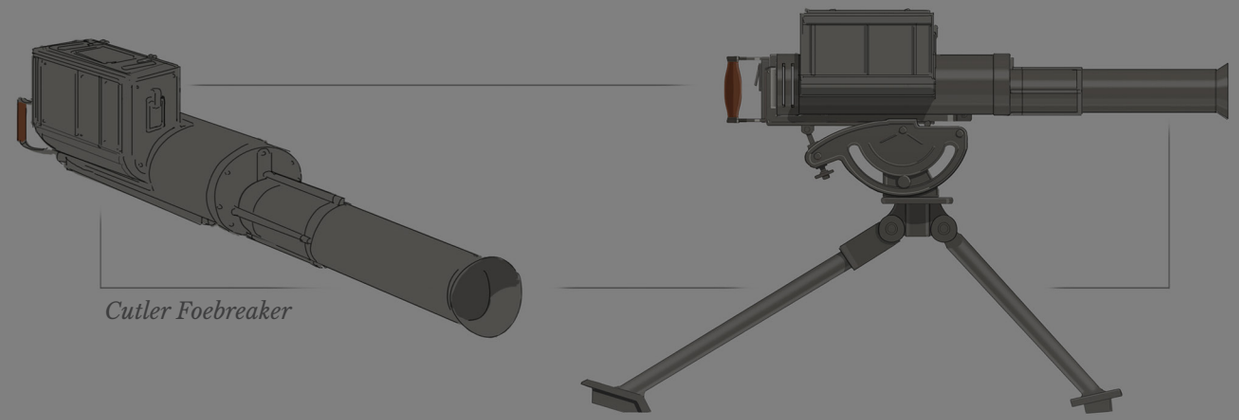

*Cutler Foebreaker*

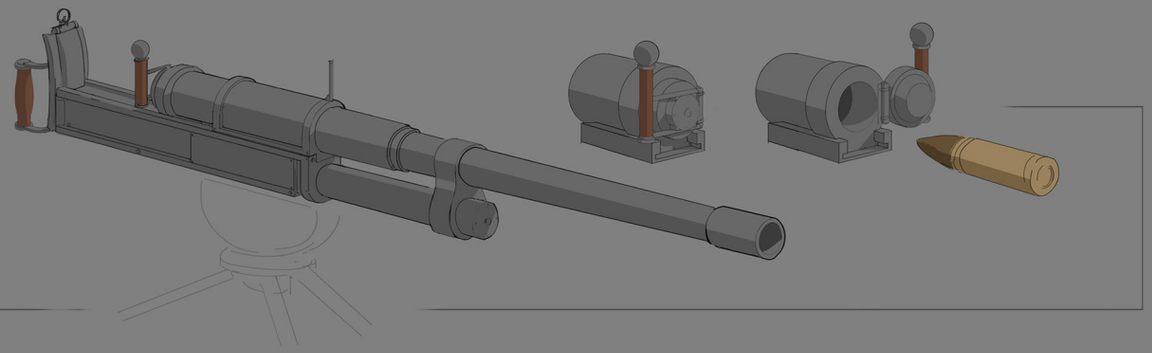

*Daucus isg.III*

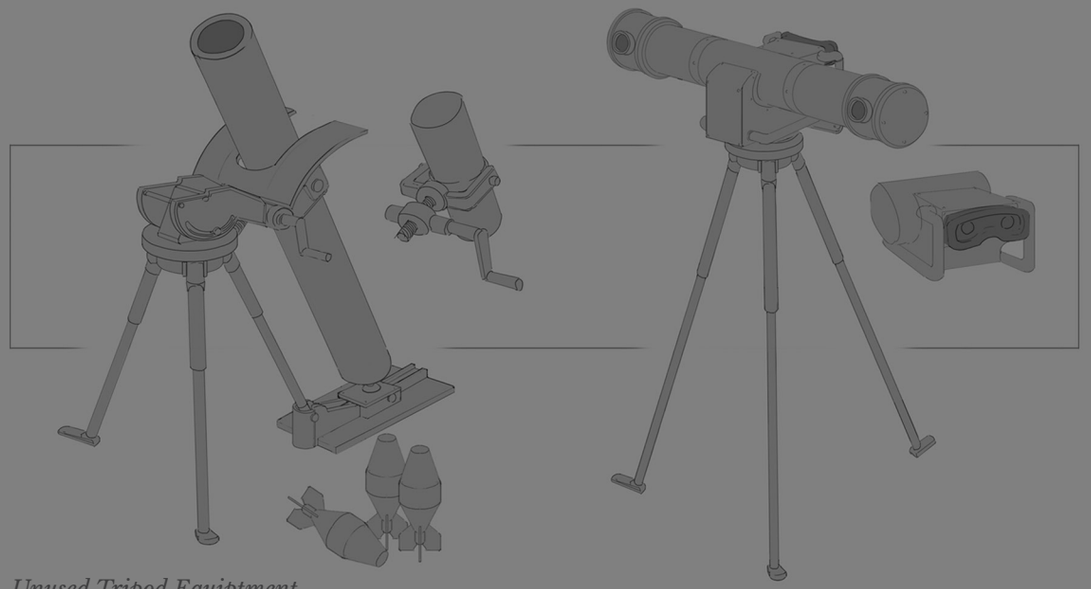

*Unused Tripod Equiptment*

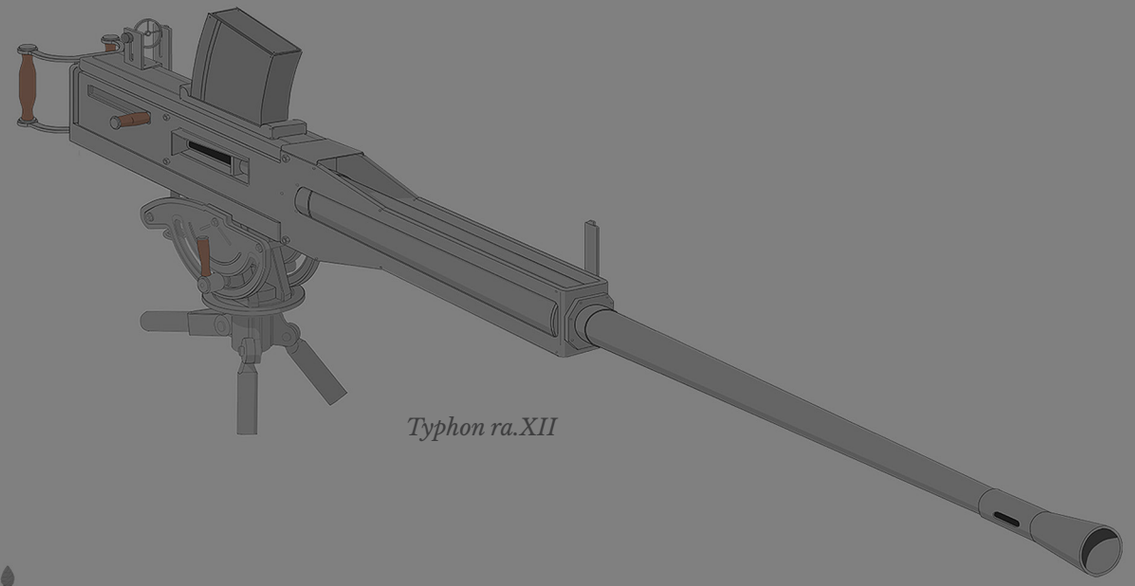

*Typhon ra.XII*

*Tripod Faction Flags*

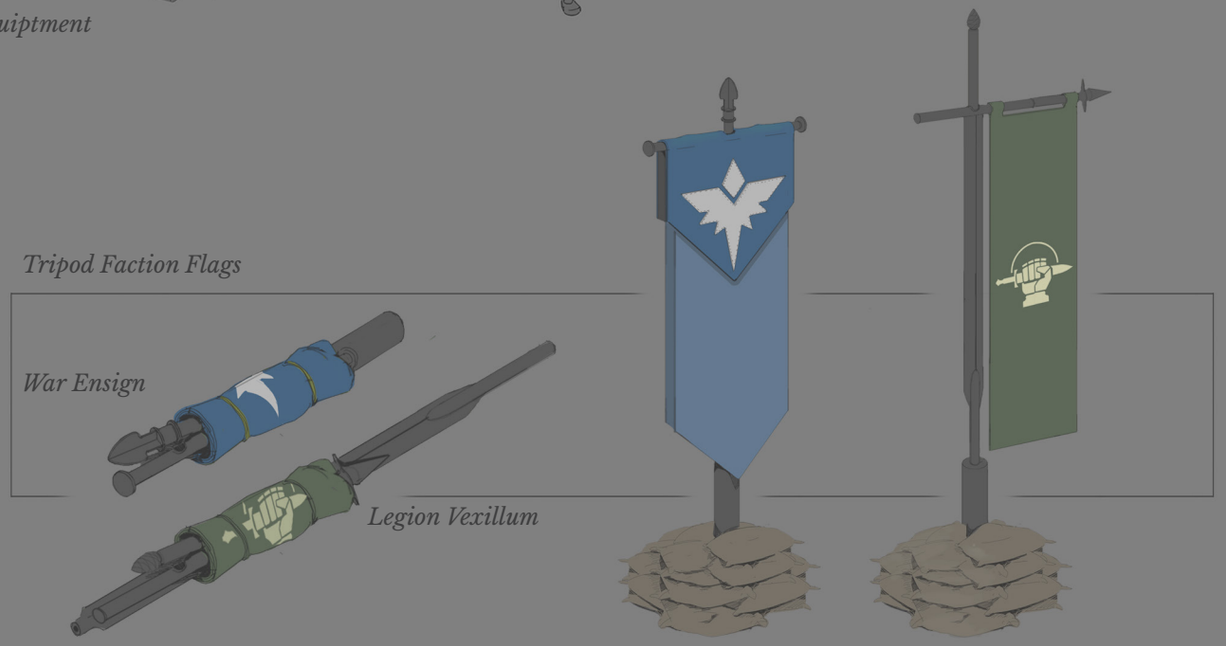

*War Ensign*

*Legion Vexillum*

Part of the push for more tripod equipment, a mortar was designed but proved to not work well and required a significant amount of 'special case' animations and rules for deployment. It was eventually moved to low priority. A Range finder was also pitched but at the time did not serve a function over the binoculars.

What did succeed was a recent pitch for faction flags to let players roleplay and customize their towns and bases, and lay claim to land around the map.

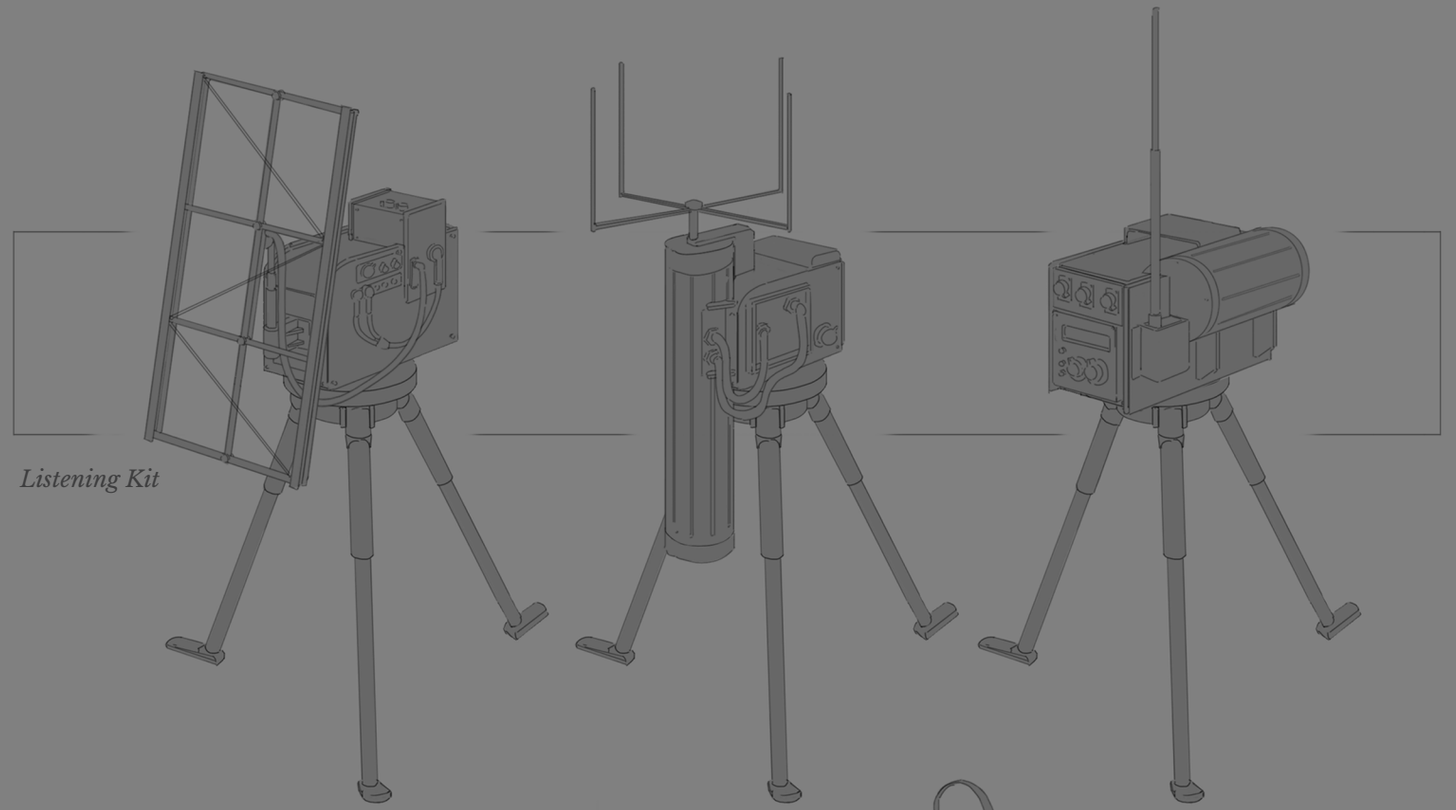

*Listening Kit*

There has always been a big desire to expand the intelligence game whenever we can. It has resulted in a few large-scale features like the Observation Towers, Intel Centers and Weather Stations. Most recently, air intel for planes has been a big addition. For infantry, we had the radio backpacks but we wanted more options for them to contribute.

The listening kits were a fun chance to design some technological devices. We tried some faction specific designs, but eventually the visuals became faction agnostic, like the logi vehicles. There was an idea that the listening kits could be a type of mine buried under the ground. Designs were drawn up, however the push for expanding content for the tripods was what made the final decision.

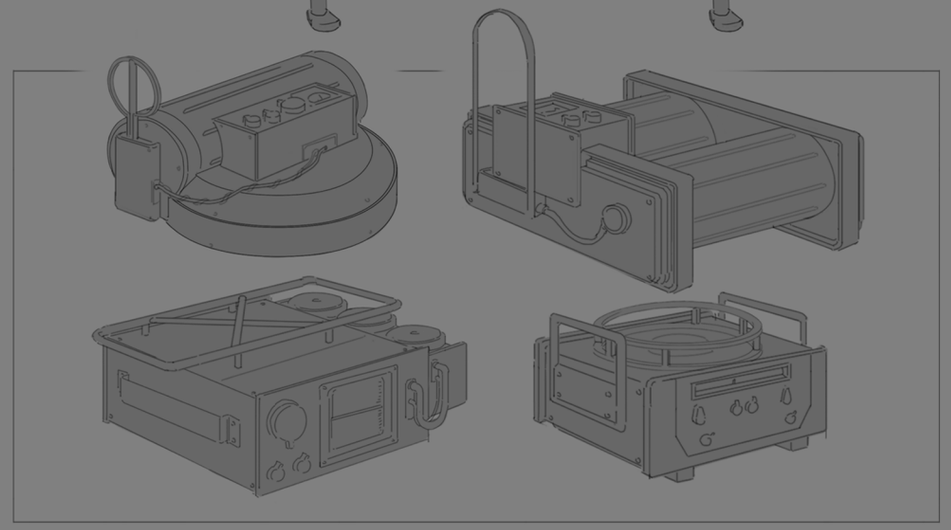

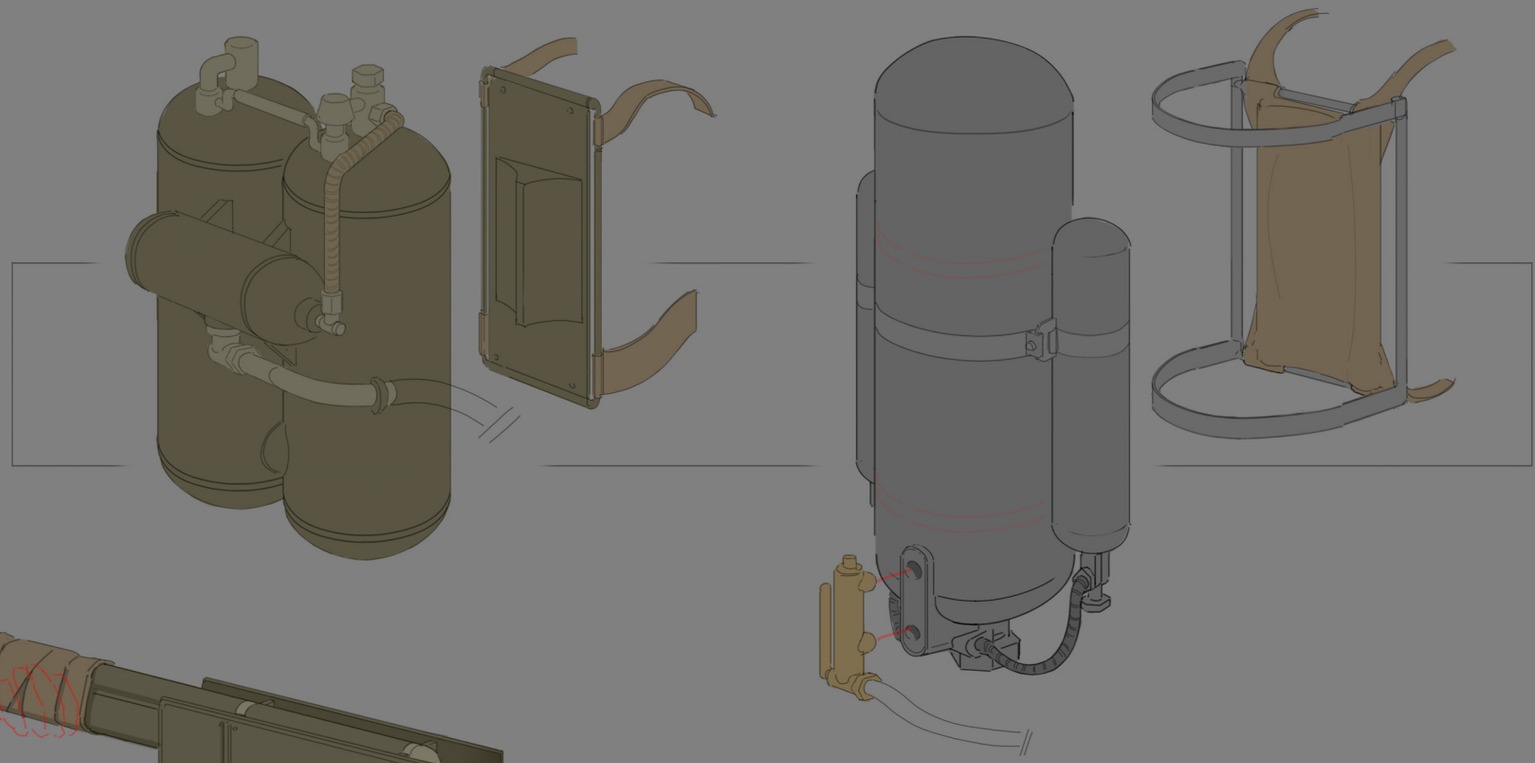

*Molten Wind v.II Flame Torch*

*Willow's Bane Model 845*

The flamethrowers of the Inferno update were a really easy design. An unmistakable silhouette in real life, a single design for both factions was drawn up quickly. As a first class feature of the update, we could afford the time to develop custom poses, allowing for an older fire hose style grip to the weapons.

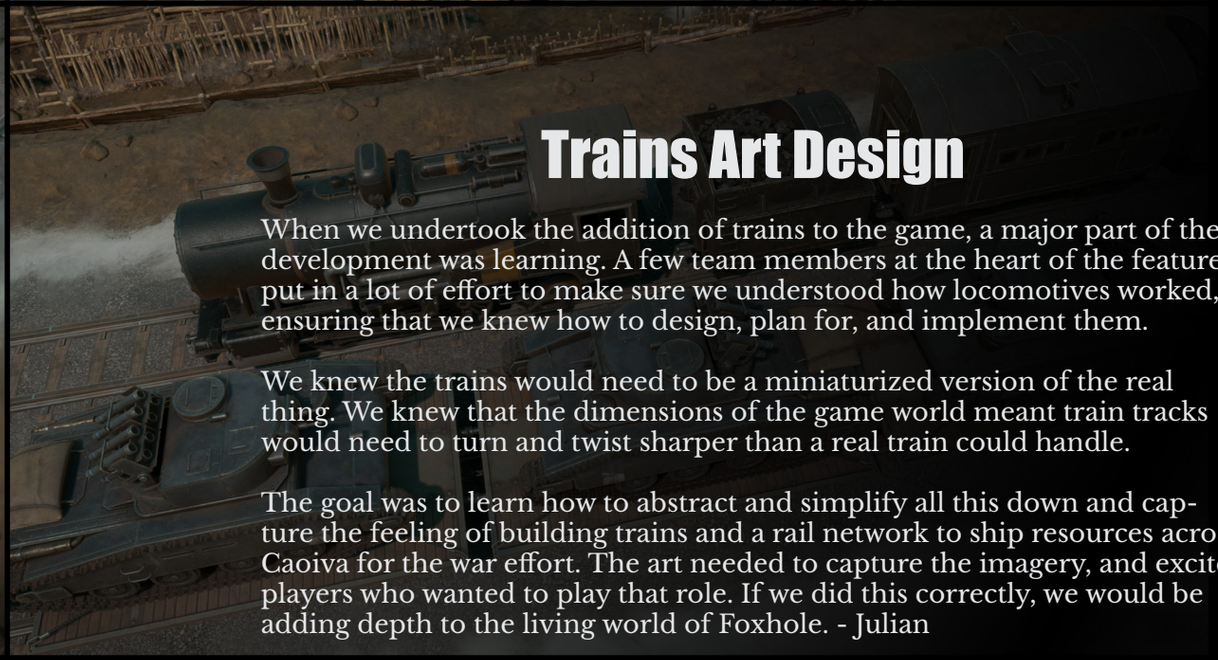

# Trains Art Design

When we undertook the addition of trains to the game, a major part of the development was learning. A few team members at the heart of the feature put in a lot of effort to make sure we understood how locomotives worked, ensuring that we knew how to design, plan for, and implement them.

We knew the trains would need to be a miniaturized version of the real thing. We knew that the dimensions of the game world meant train tracks would need to turn and twist sharper than a real train could handle.

The goal was to learn how to abstract and simplify all this down and capture the feeling of building trains and a rail network to ship resources across Caoiva for the war effort. The art needed to capture the imagery, and excite players who wanted to play that role. If we did this correctly, we would be adding depth to the living world of Foxhole. - Julian

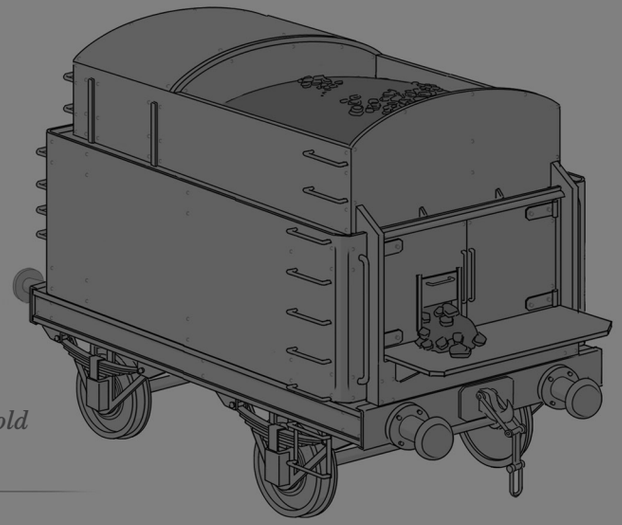

*BMS Rockhold*

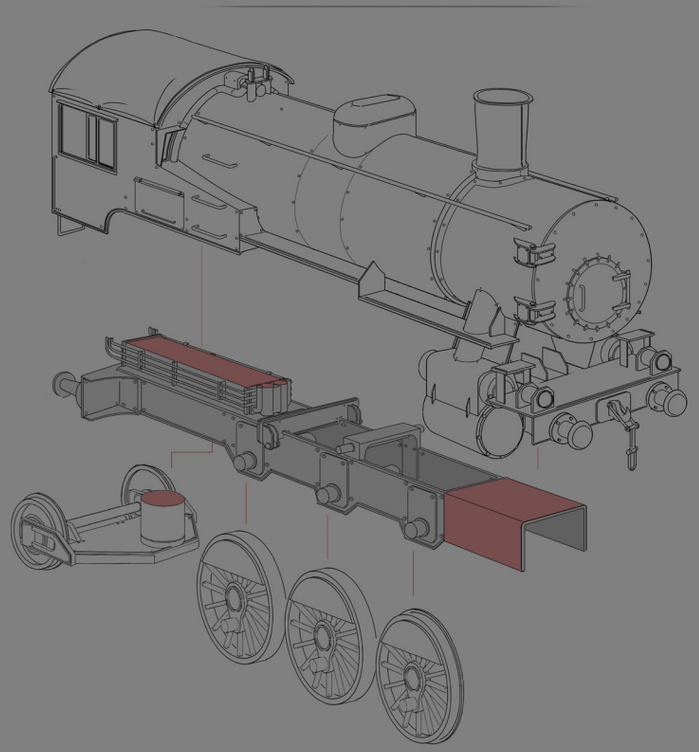

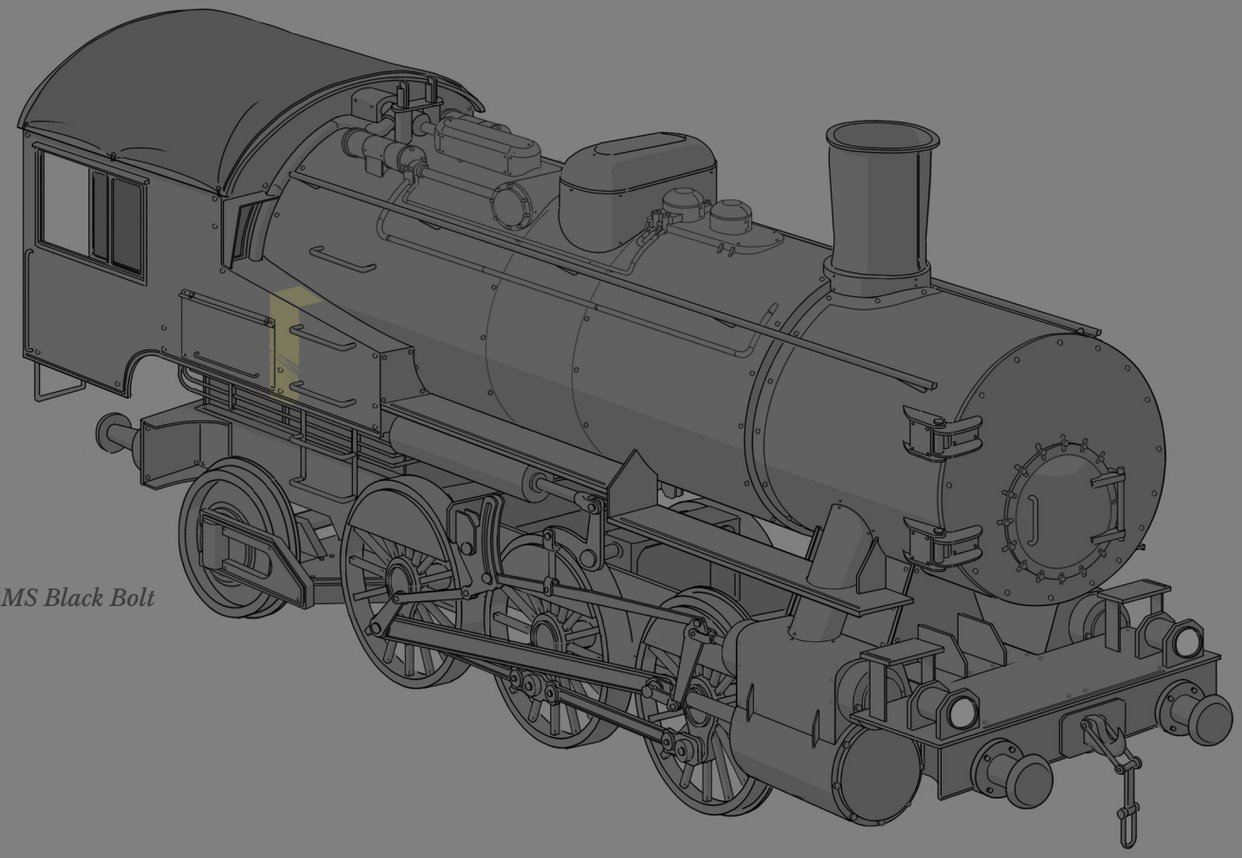

*BMS Black Bolt*

## Trains

Visual development of the trains was pretty simple but technically demanding. A lot of time was spent making sure the concepts had a complete understanding of how trains operate, so the information could inform the modelers and animators. The actual visuals were a matter of finding the correct scale so the final train models looked good in the game, while finding the right scale for the Foxhole world. Train design was a balancing act of abstracting the details, while still aiming to keep the trains looking real.

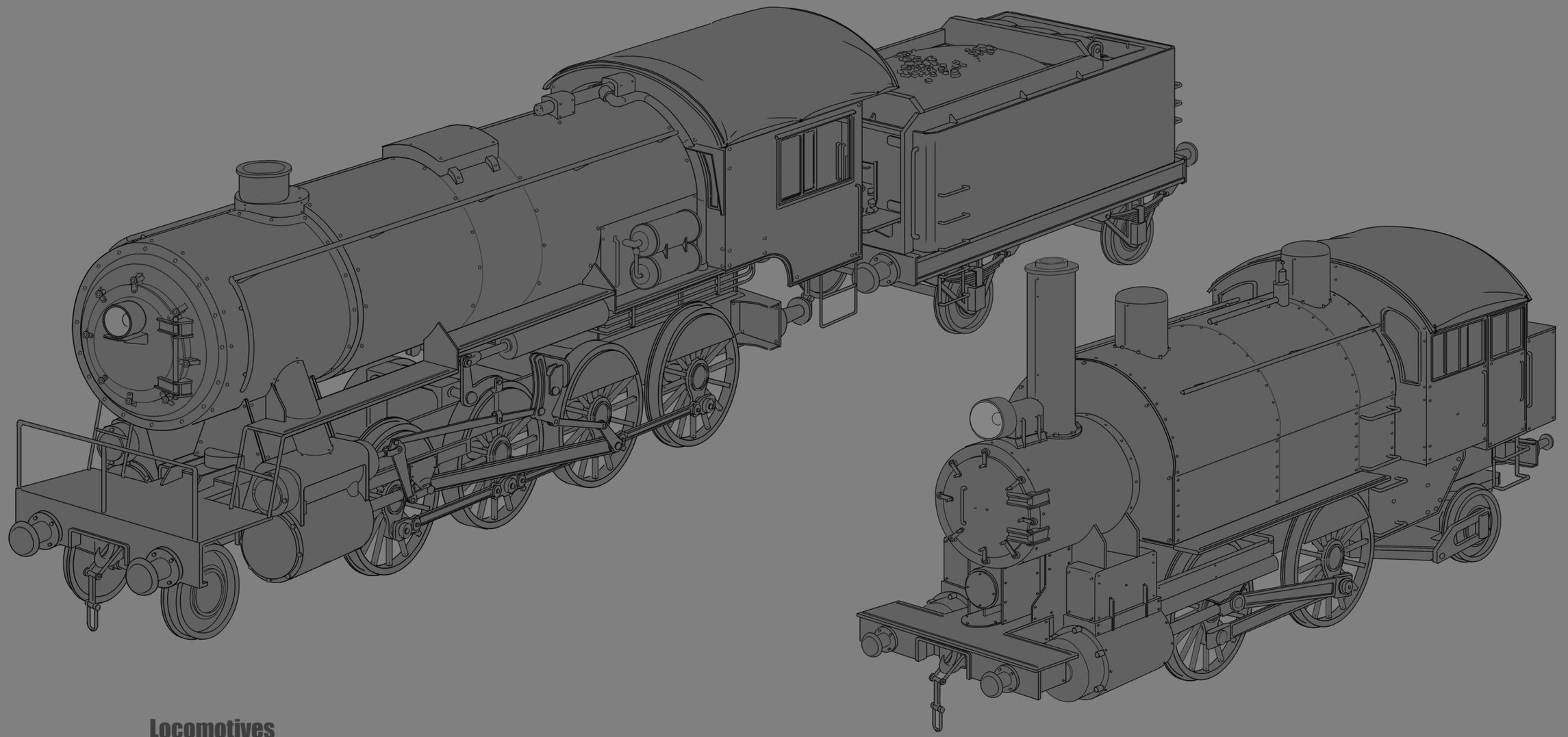

## Locomotives

A few alternate engines were designed to figure out the ideal size and for the locomotive. A lot of the hard work on the feature was actually on the programmers figuring out how to make the entire system work smoothly.

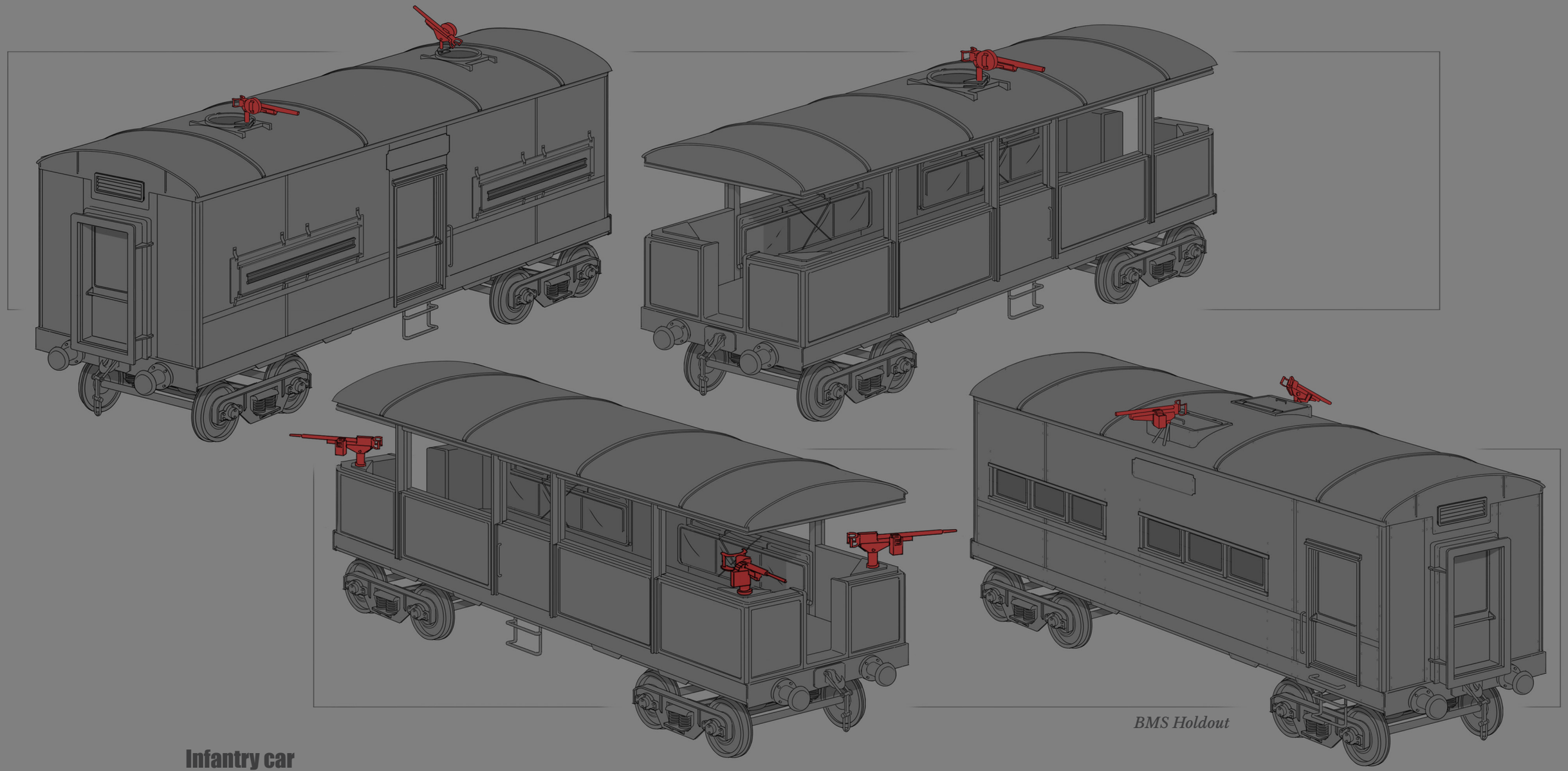

*BMS Holdout*

## Infantry car

Designs were sketched up to help figure out if we wanted walkable areas on the train. Some on the team wanted it, but there were issues with the scale of the vehicle, and the size of the player characters.

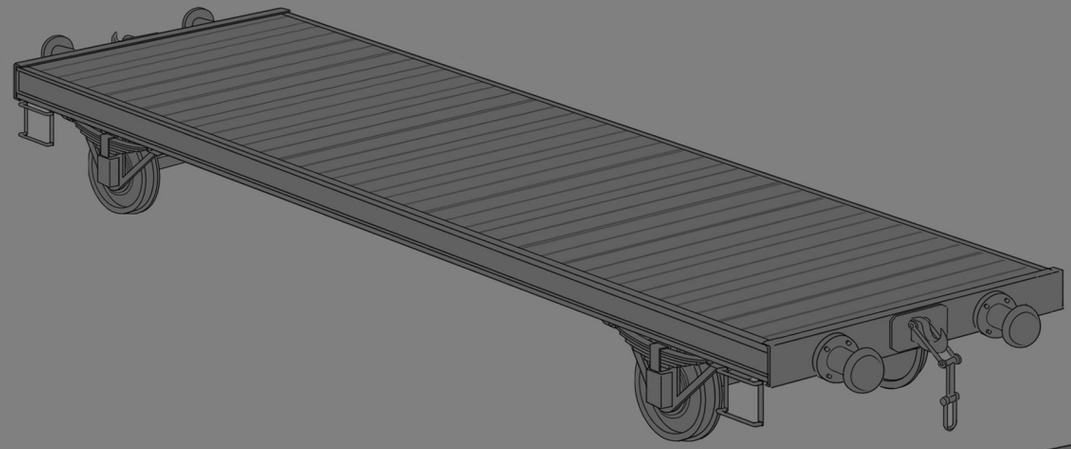

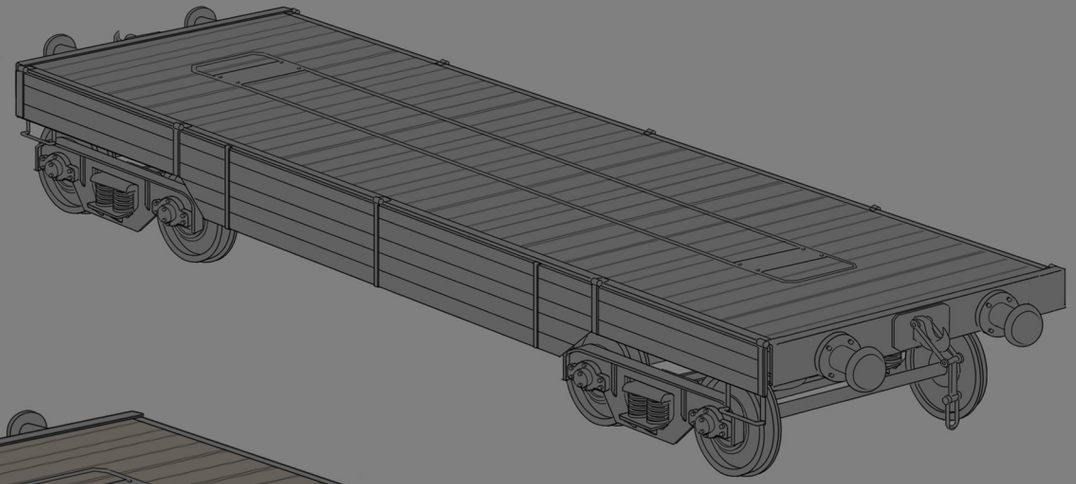

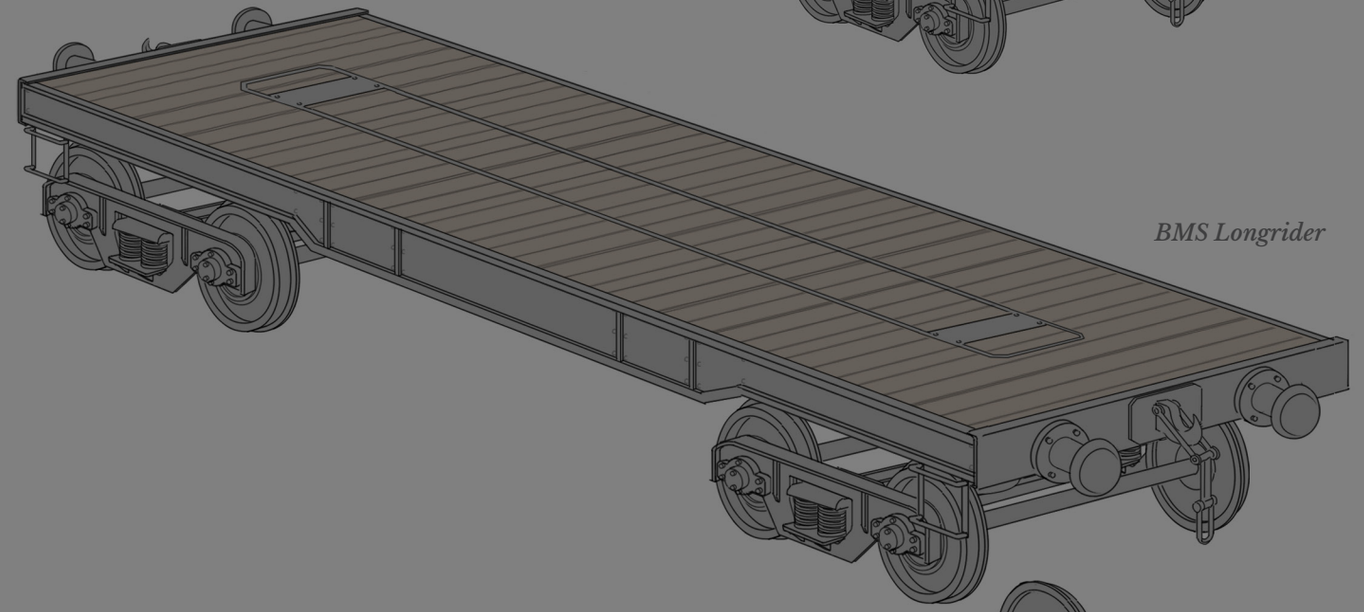

*BMS Longrider*

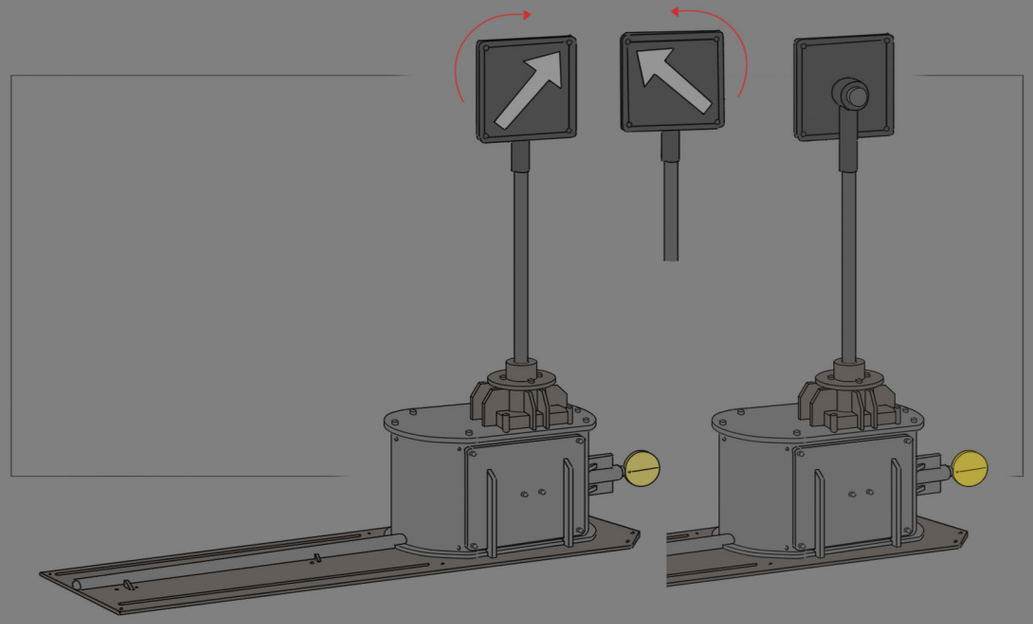

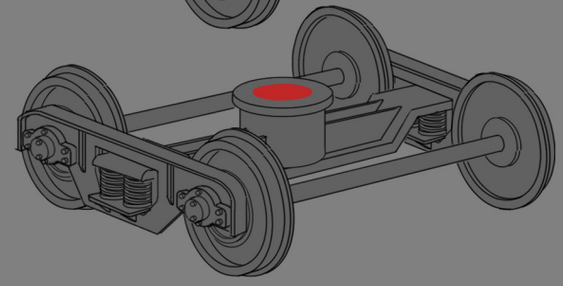

## Flatbed

A few flatbeds were designed, but there was not a lot to them by design. The interesting part would be the cargo on top.

To save time, one “bogie” (or set of wheels) was modeled and shared across all train cars.

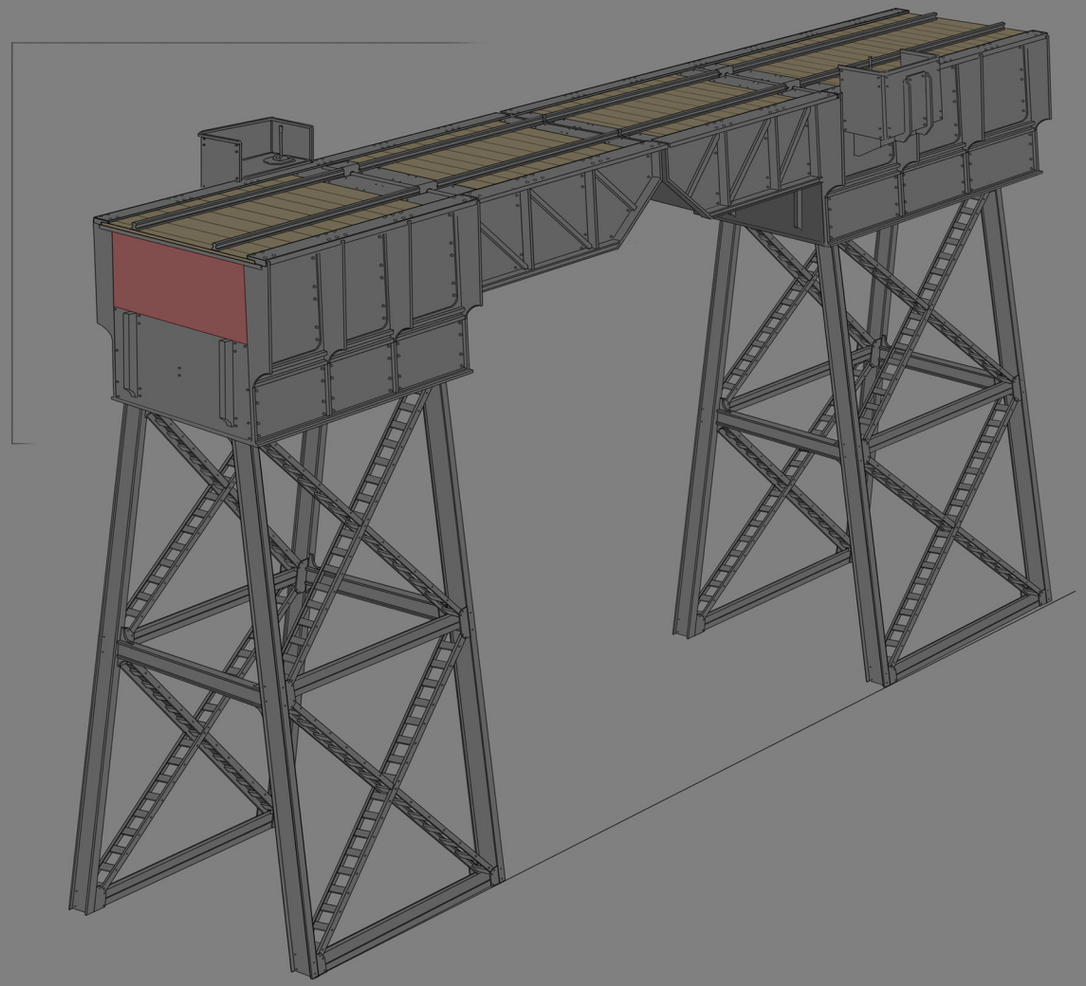

*BMS Roadhouse*

## Caboose and Bridge

The caboose was a late addition meant to solve an issue with the gameplay loop and repairing track.

As the feature grew, a train bridge was needed. It was a fairly simple design, but a technically demanding drawing.

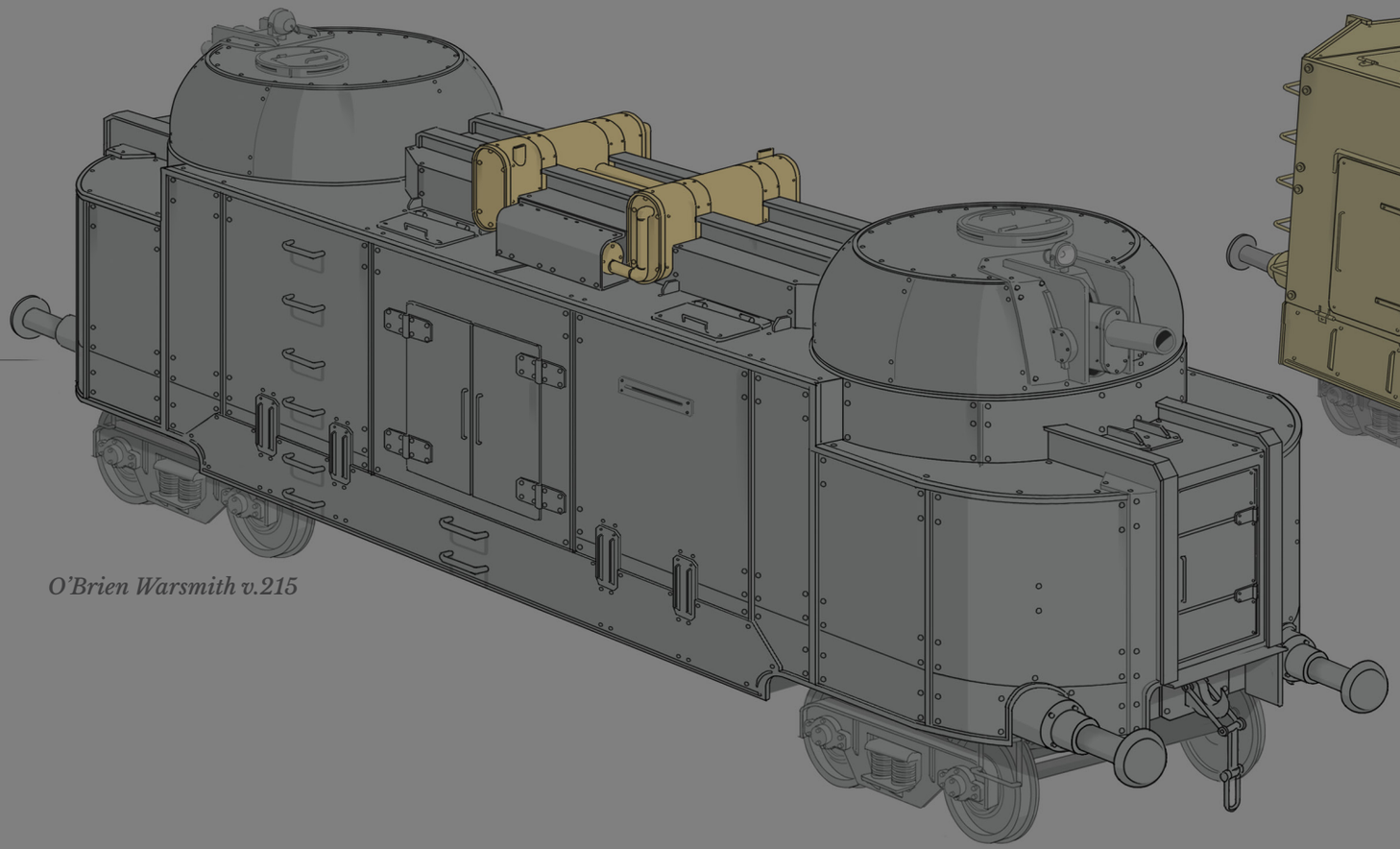

*O'Brien Warsmith v.215*

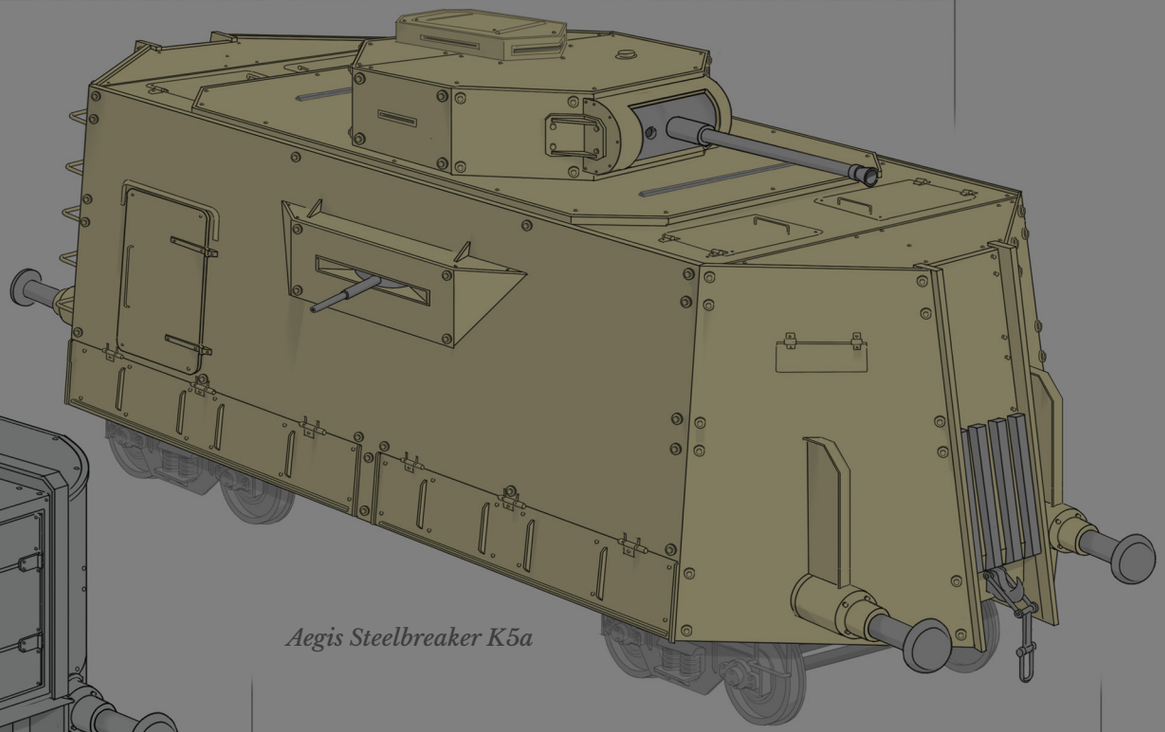

*Aegis Steelbreaker K5a*

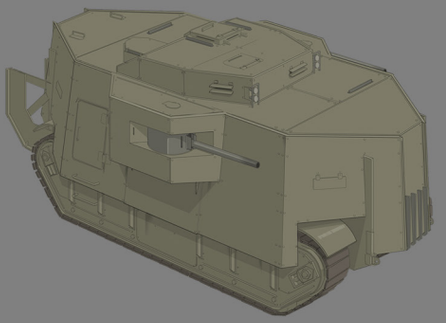

## Combat Cars

The Inferno update was meant to focus on logistics game play for Trains. However there was a push to represent the armour combat trains of the era.

The combat cars were inspired by the early tanks of World War 1. Some were just tracked train cars, which we wanted to capture in our trains, by using the relic tanks to theme the car of each faction. There is hope to expand this side of the train feature in the future.

*Tempest Cannon RA-2*

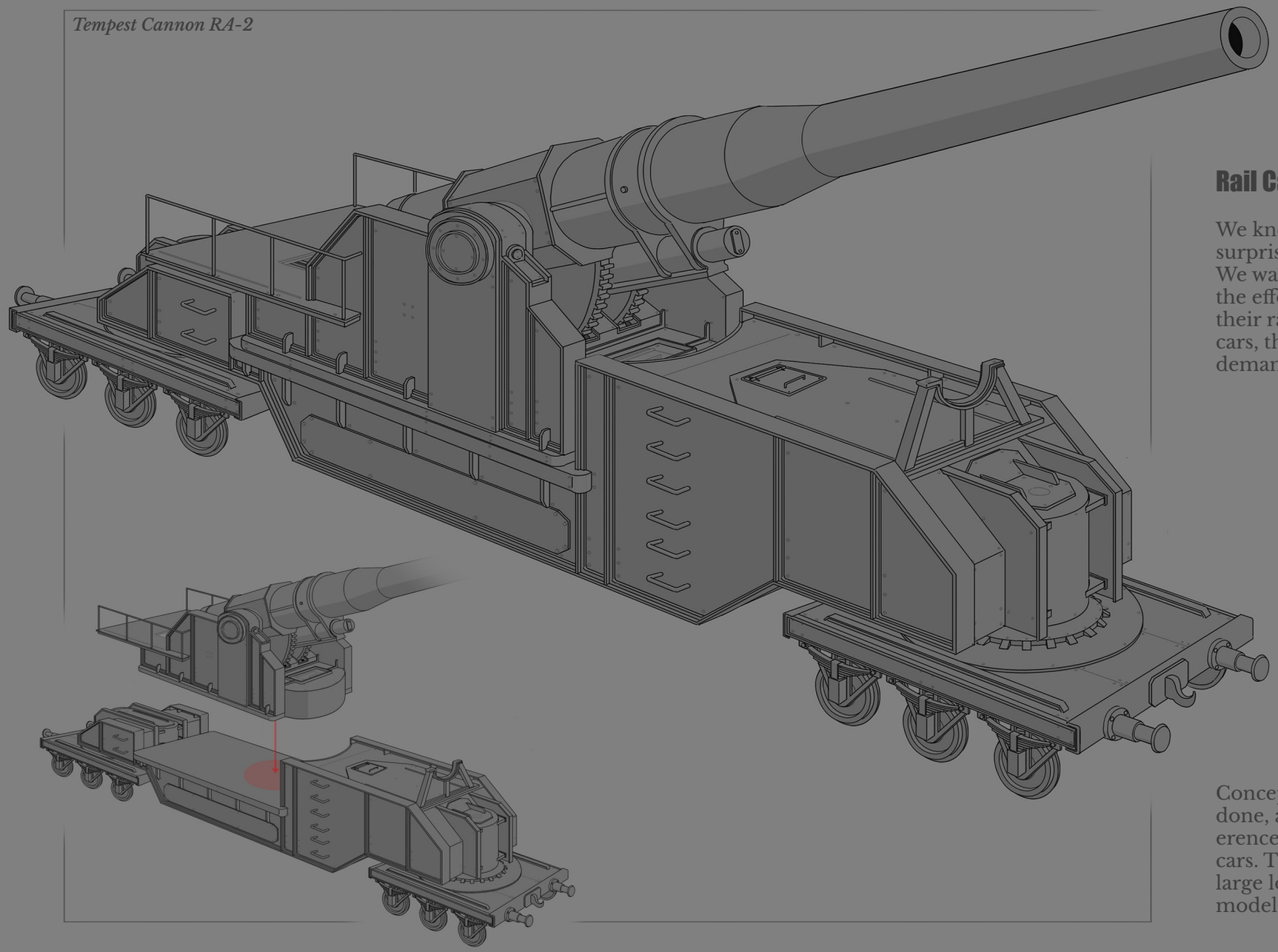

## Rail Cannon

We knew we wanted the rail cannon to be a big surprise at the end of the trailer for the update. We wanted this to be a big end game goal for all the effort players would put into building out their rail networks. Similar to all the other train cars, the concepts were fairly easy to design, but demanded complex technical drawings.

Concepts for the small trains were never fully done, and a lead modeler modeled from reference images and adapted the larger flatbed cars. The reason for this was simply timing - the large locomotive engine was finished, and the modeler could quickly make the small one.

*BMS Bloodtender*

## Hospital car

Coming later in production, the idea for a large mobile hospital car came from a plan to re-evaluate and expand the medical gameplay across the board. At the time, the concept artists had started work on the Airborne update, and with the knowledge that planes were coming, added an AA gun on the train car for protection.

# Naval Art Design

Designing the visuals for the Naval Warfare update was a massive undertaking. The game was adding an entirely new theatre of war. The project up until then had made a decision to focus on land-based warfare until we could devote the correct amount of time and attention that naval combat and logistics deserved.

The game designers started working on plans. The programmers set to work on the physics engine. For concept art, the first step was to forget everything that went into the rest of the game. Time was allotted to researching and painting to simply absorb knowledge and understand the feeling of what fleets of ships would need, and what the navies of the Colonial and Warden forces would need in order to feel correct for Foxhole.

This exploration resulted in a single answer: scale. To sell this feature, we would need to visually sell the size of the ships. -Julian

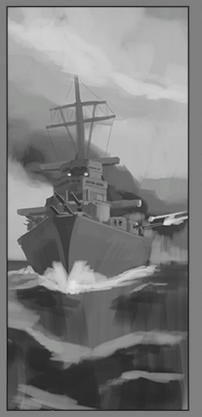

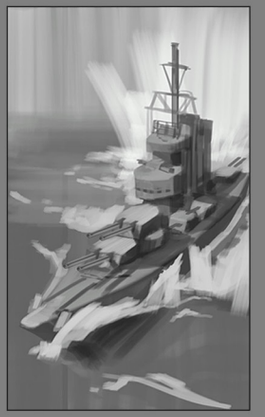

When the Naval Warfare update first began development, some time was set aside to study what it meant to design proper navy ships. Studying involved reading, research, watching documentaries, and creating a few paintings as studies. There was no deadline or goal to design an asset for the game, just a real effort to think differently, and to try to understand and capture the feeling of a totally different style of game.  - Julian

## Early Game Naval revamp

The Naval Warfare update was us getting the vision and scale of what we wanted to achieve, and in the year that followed we continued to iterate on that base. The Airborne update required some early game additions to the boat lineup, and we took the opportunity to expand the roster of boats to address some missing gaps for both factions.

Infantry, Medium and Siege Boats for both factions were generated. Luke was put in charge of what we called the ‘asymmetry pass’ to see how we could make both factions boats dynamic and fun.

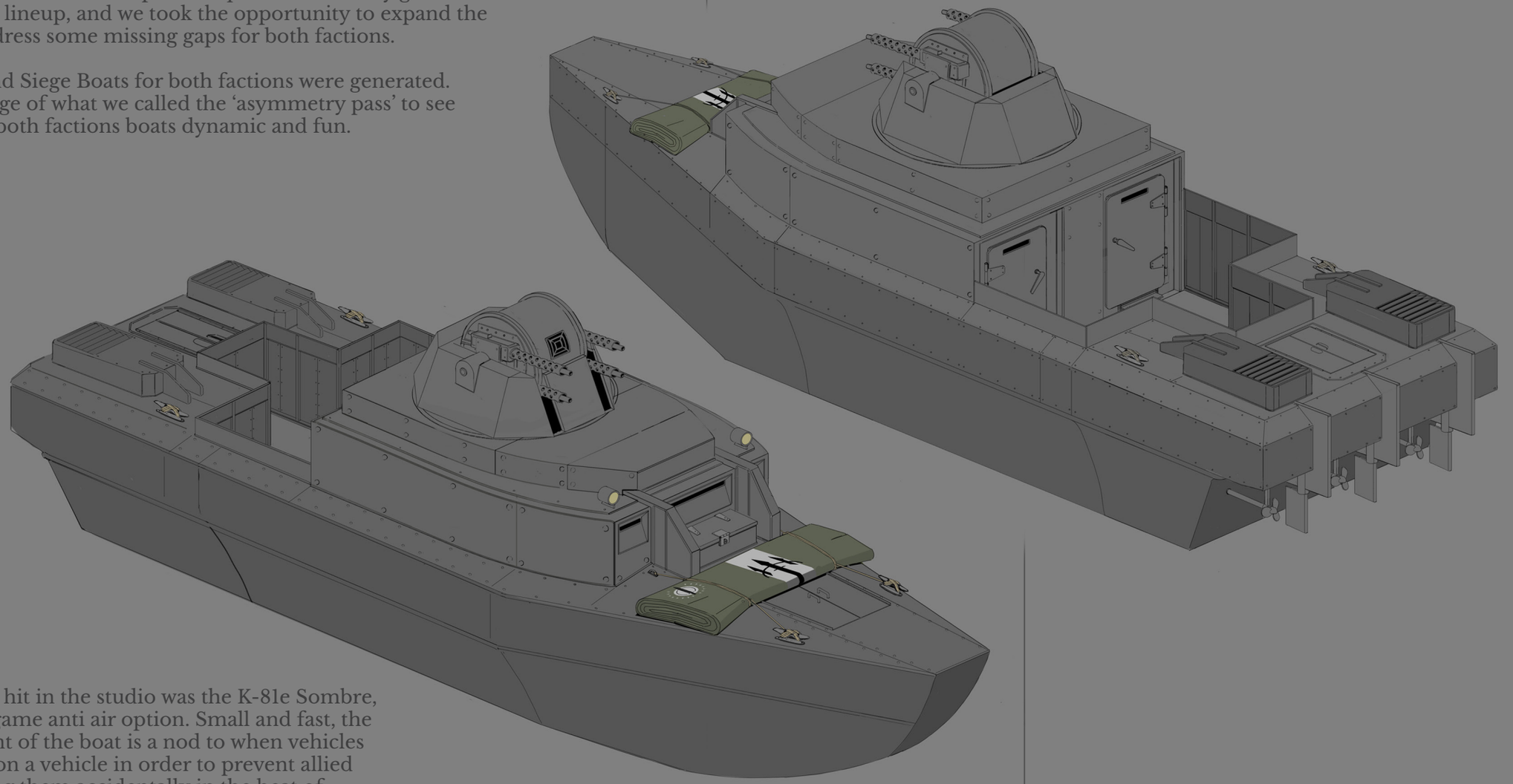

*K-81e Sombre*

## Infantry Boats

The first boat to be a hit in the studio was the K-81e Sombre, the Colonial’s early game anti air option. Small and fast, the naval flag on the front of the boat is a nod to when vehicles would put their flag on a vehicle in order to prevent allied aircraft from shooting them accidentally in the heat of combat.

*68A-4 Ronan Fathomer*

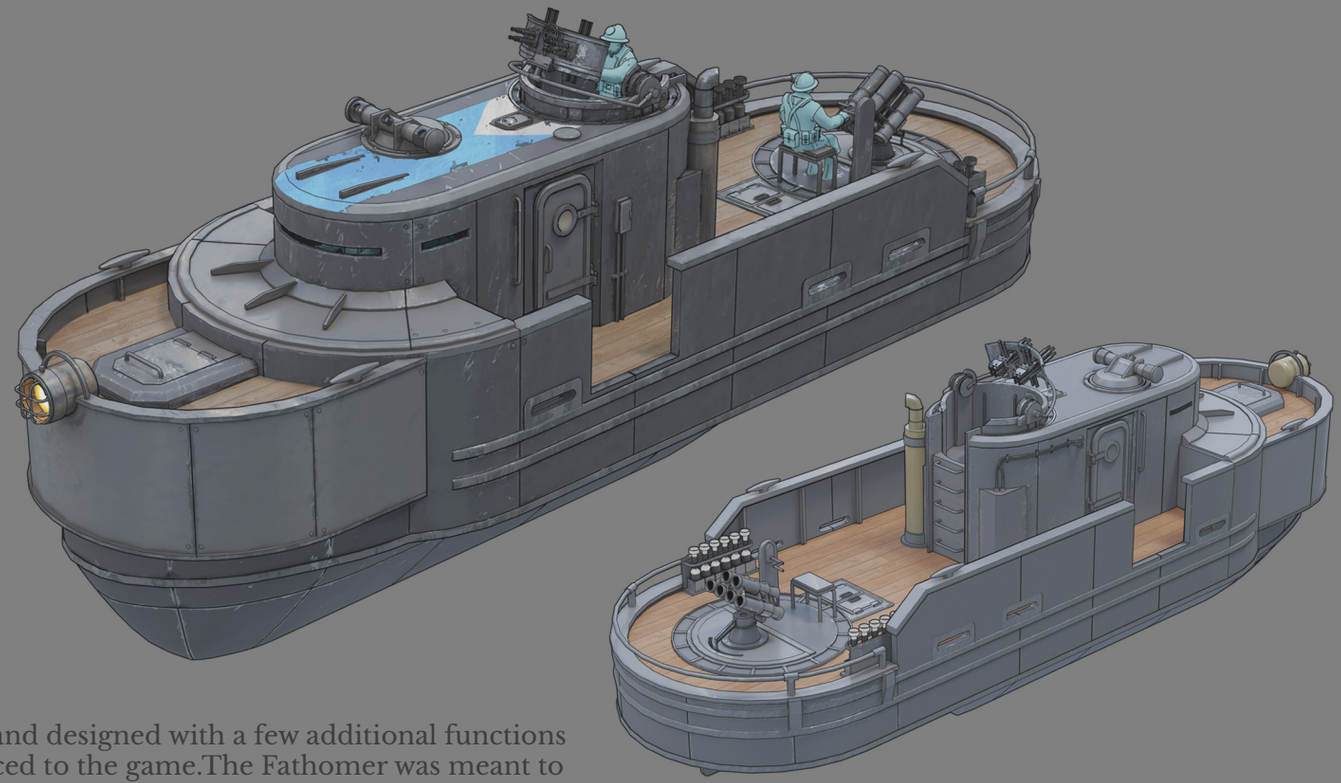

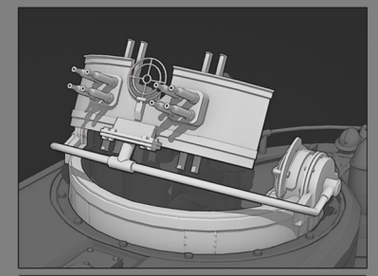

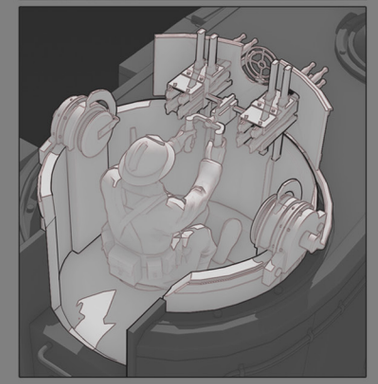

## Infantry Boats

The Warden infantry boat was pitched and designed with a few additional functions that were removed when it was introduced to the game.The Fathomer was meant to look like a more robust picket ship. It could sit in waterways and ports and take hits.

Overall, both factions' infantry boats were designed with the idea that they would come out early in the game, but be needed at all stages of the war to fend off aircraft, protecting shipping lanes and larger boats.

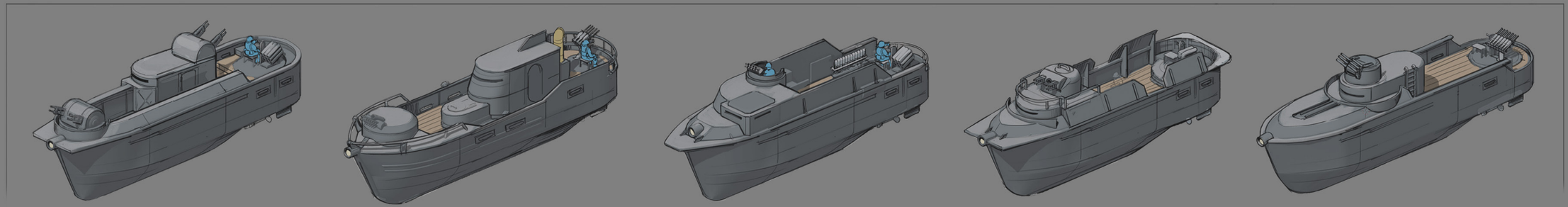

## Medium Boats

A sort of rock-paper-scissors idea for the new boats and planes was developing. The medium boats needed to be a threat to shipping and infantry boats, but be susceptible to air attack. They also needed to be slightly less powerful than gunboats, and not be a threat to large destroyers or battle ships.

An attempt to strike a balance in combat with the infantry boats, the medium boats were to be our early game 'tank on water'. As development went on, protection for the gunners was evaluated and re-evaluated a few times. Game design had learned a few lessons from the gunboats, and interior spaces were requested. The goal was to design something to fight off infantry boats, but still allow the infantry boats to be a threat to the crew.

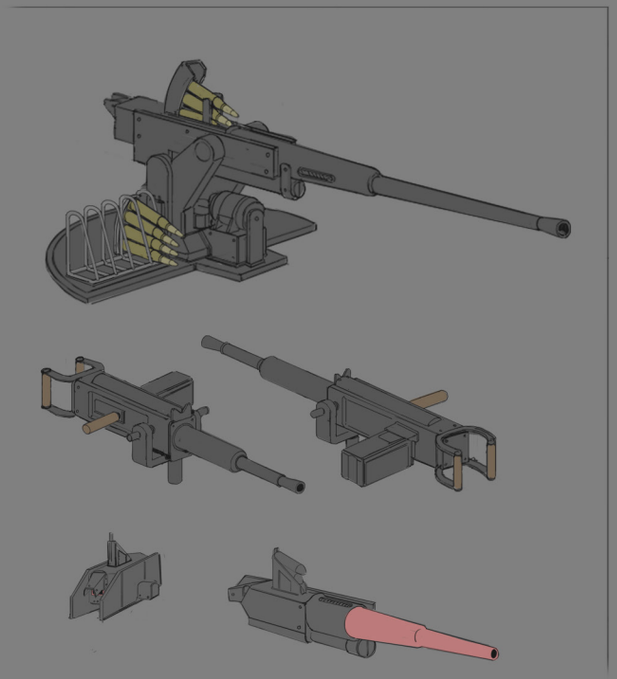

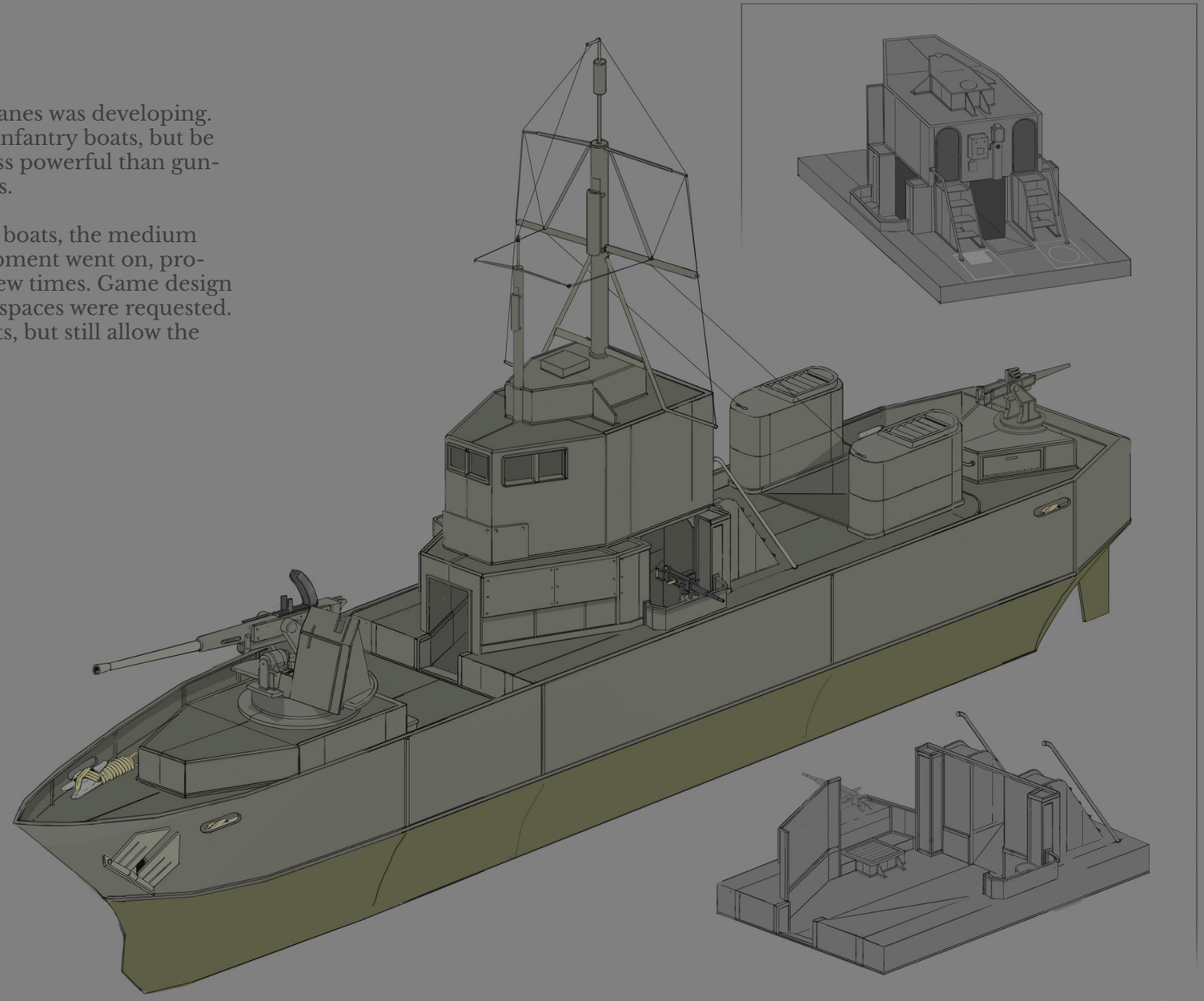

*Strider*

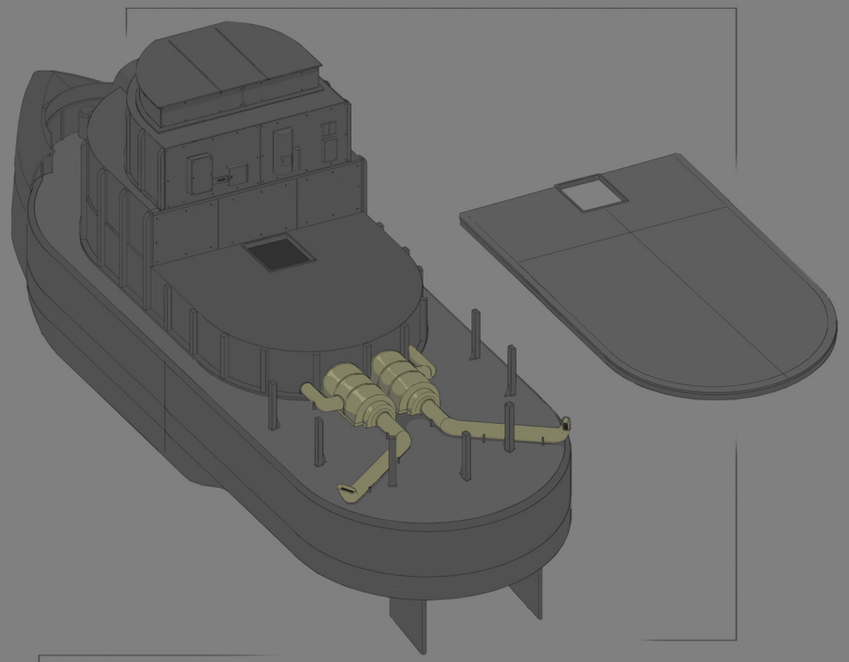

*Rinnspeir Ornitier-Class Gunship*

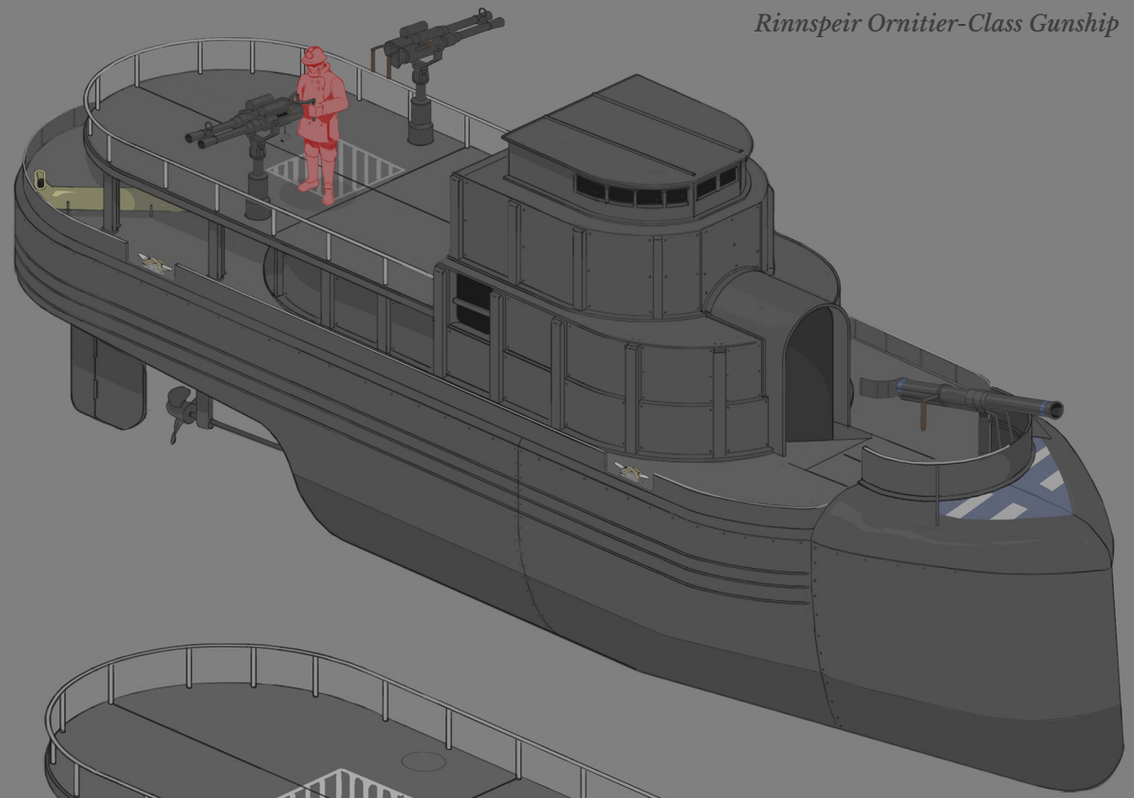

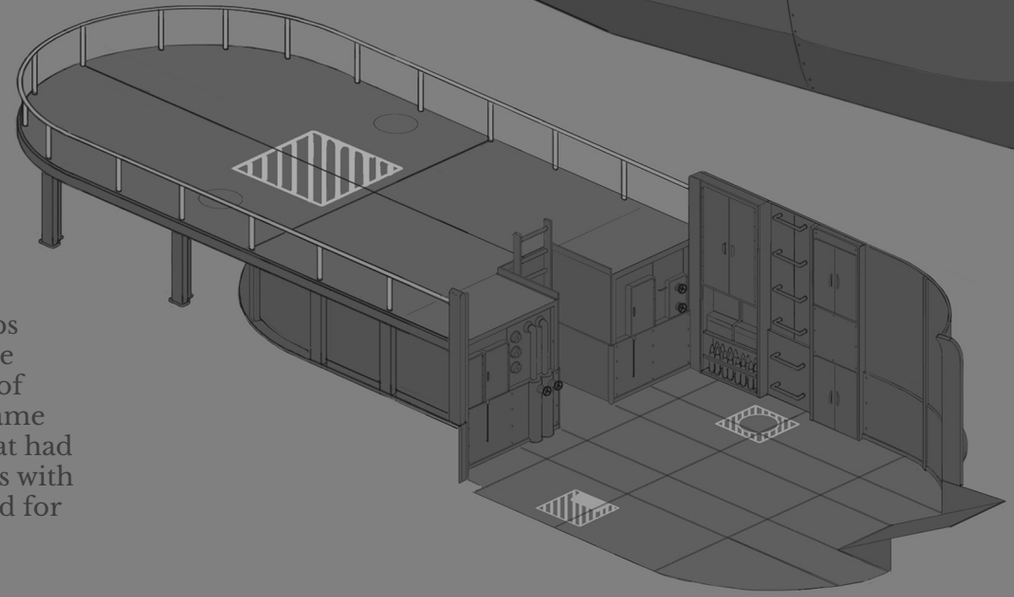

## Naval Themes

The major visual theme for the new Warden ships came from photos of old bustling ports, while the Colonial ships were meant to reinforce the look of their Navy. The mood we wanted for the early game Warden ships was an armada of civilian boats that had been retooled for war, filling ports and waterways with different tugs and ferries that had been retrofitted for coastal defence.

*81f-f Ronan Blackguard*

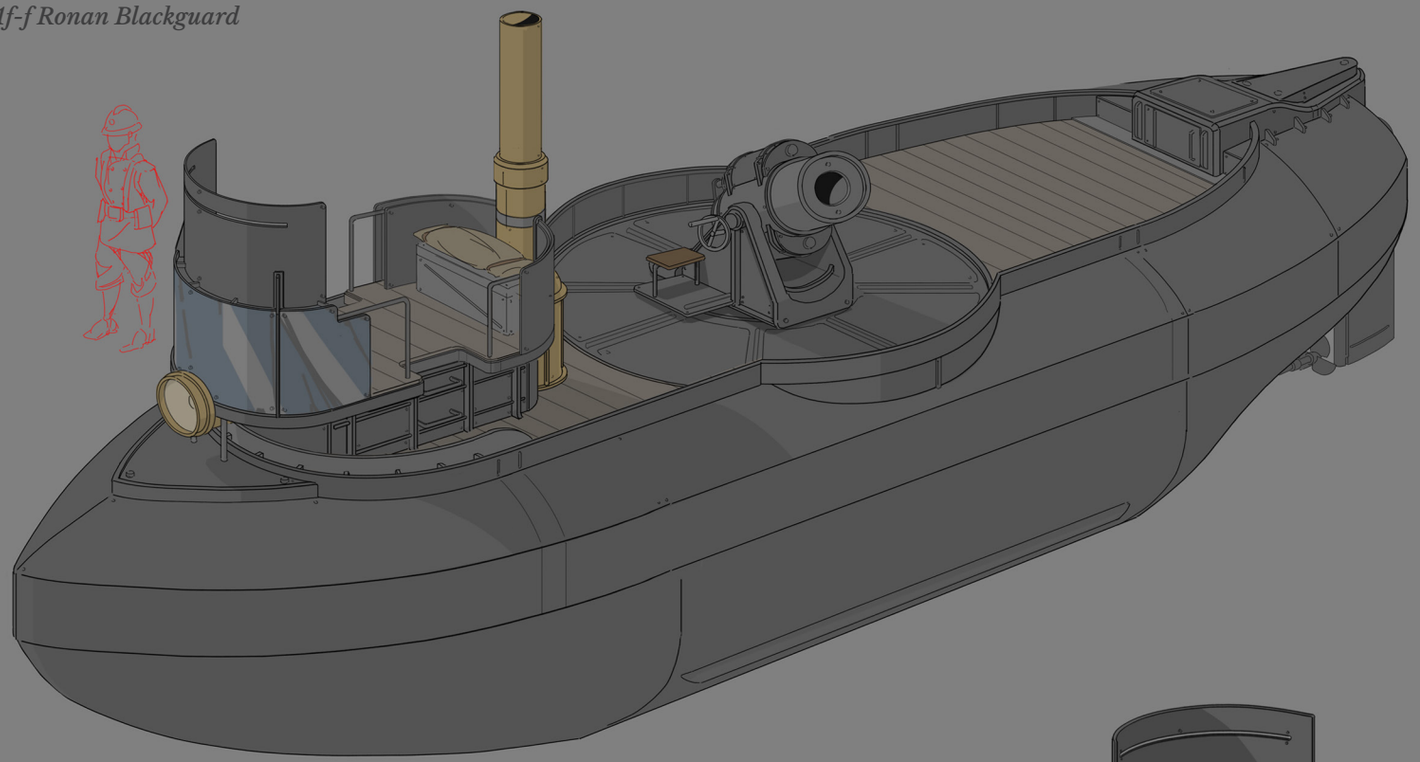

The Ronan Blackguard was a very fun exploration of designing a boat so ugly it's cute. It was envisioned as an out-of-date tug-boat that the Wardens retrofitted with the largest mortar they had . - Julian

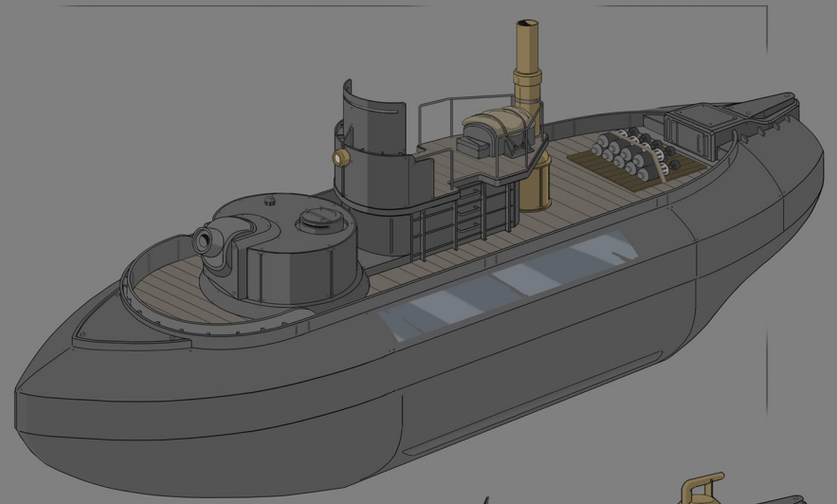

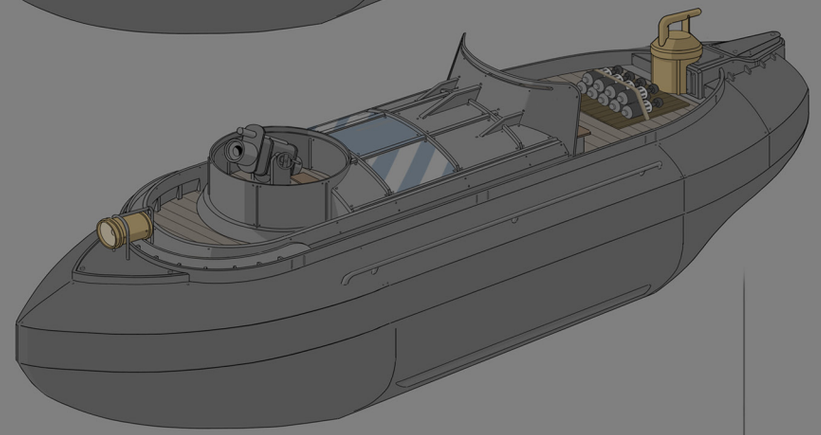

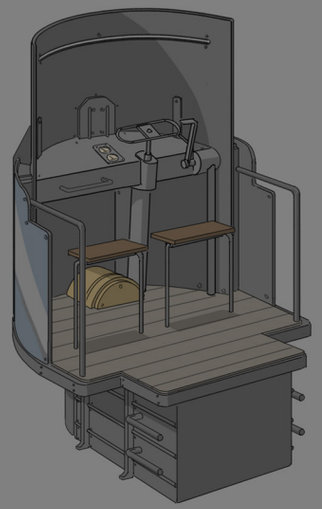

## Siege Boats

The task for the siege boats was simple. Using the new bunker buster ammo types, game design wanted boats to threaten coast defence. The task was to make a boat that could really damage player structures but be weak to attack from everything in the game.

This task was seen as an offshoot from the 'asymmetry pass'. We knew we were reusing the Colonial gunboat, so a quick new design was all that was needed for the Wardens.

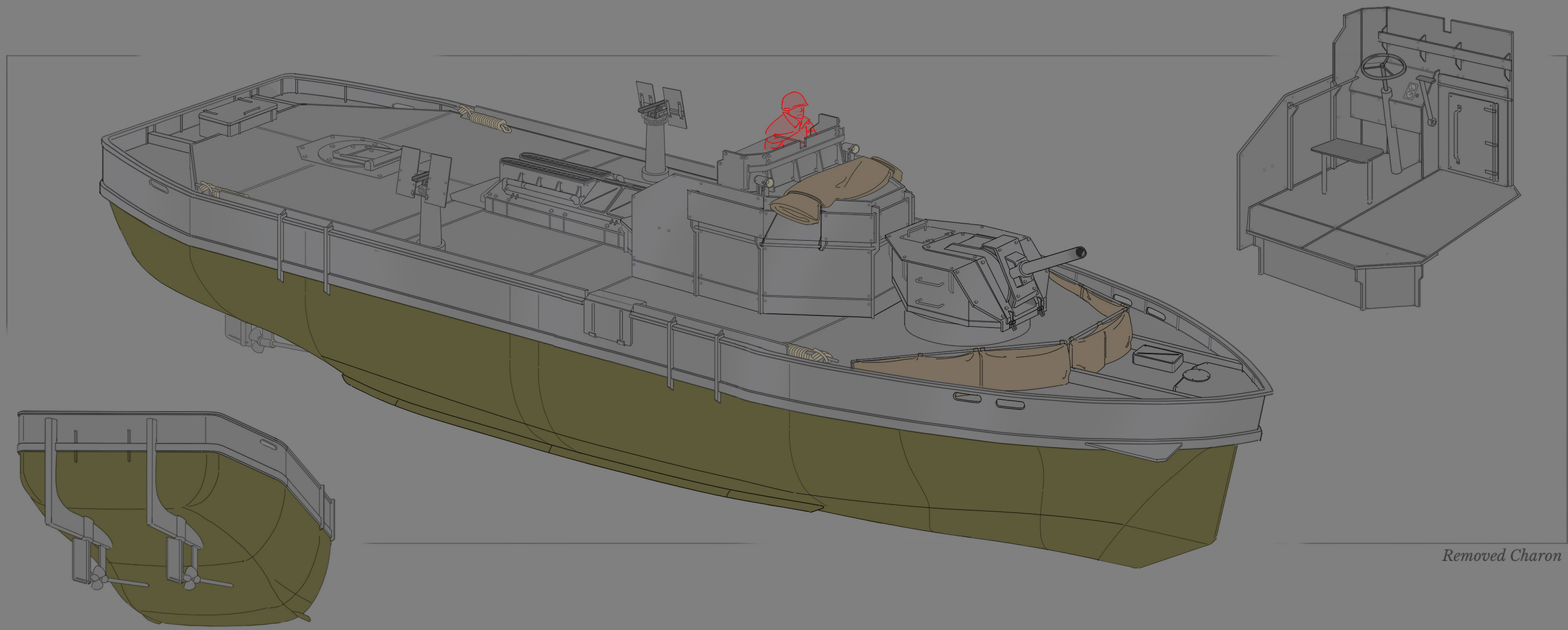

*Removed Charon*

## Repurposing the Colonial Gunboat

The Colonial gunboat from the Naval Warfare update had a few issues. The original visual idea was to follow the theme that Colonial vehicles are more like pick up trucks or utility vehicles. The idea was to have a cheaper boat which we could modify with a number of variants. The game designers had the difficult task to balance the first version as it was. An alteration to give it more armour was tried. Throughout Naval Warfare, vehicle variants have not been a priority. There were internal pushes to just redesign the gunboat from the ground up, and when it finally came time to add new boats into the game, we had a roster of other concepts already prepared to repurpose the Colonial gunboat.

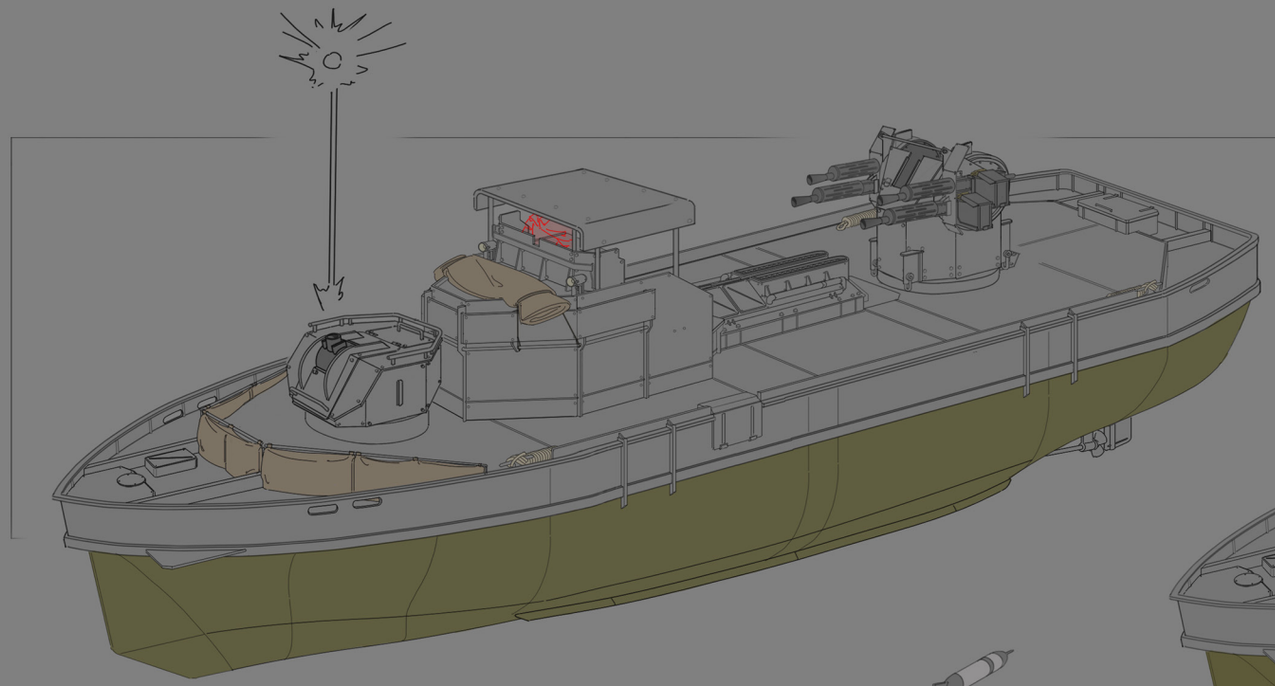

*Before planes a 'river boat' style AA variant with a Flare launcher on the front was designed. The turret was reused from one of the emplacement concepts.*

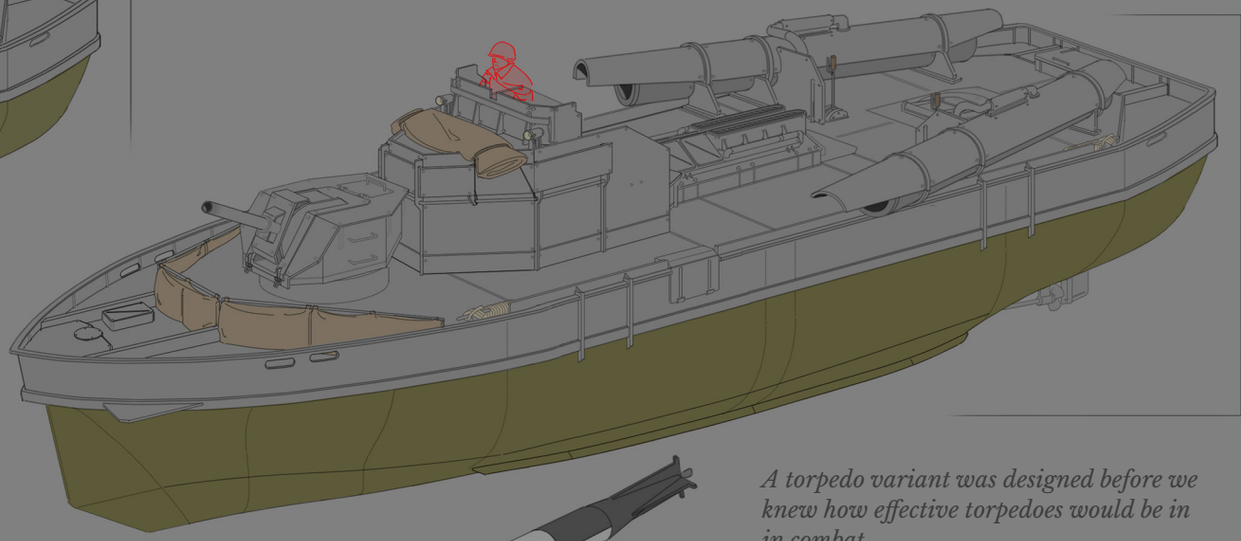

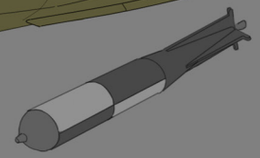

*A torpedo variant was designed before we knew how effective torpedoes would be in in combat.*

*Type B - Lucian*

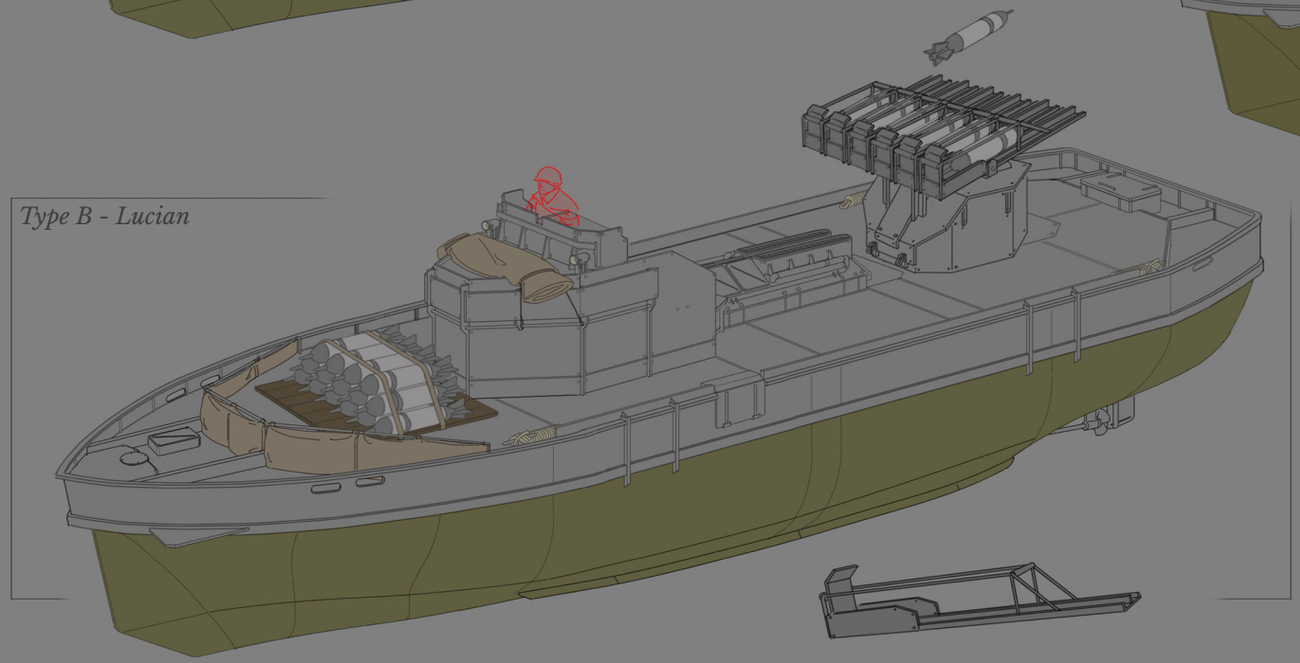

*What has become the Siege boat was originally a pitch for a rocket artillery boat with a very similar design. The ammo type was the only change.*

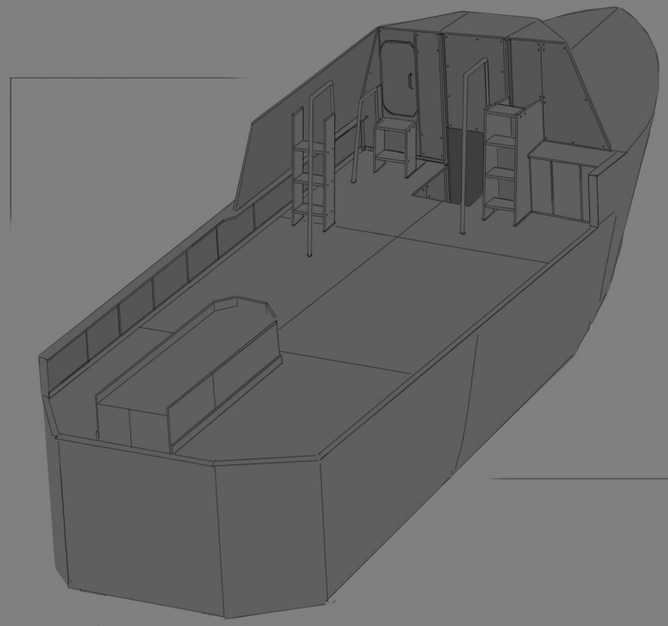

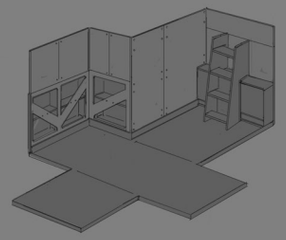

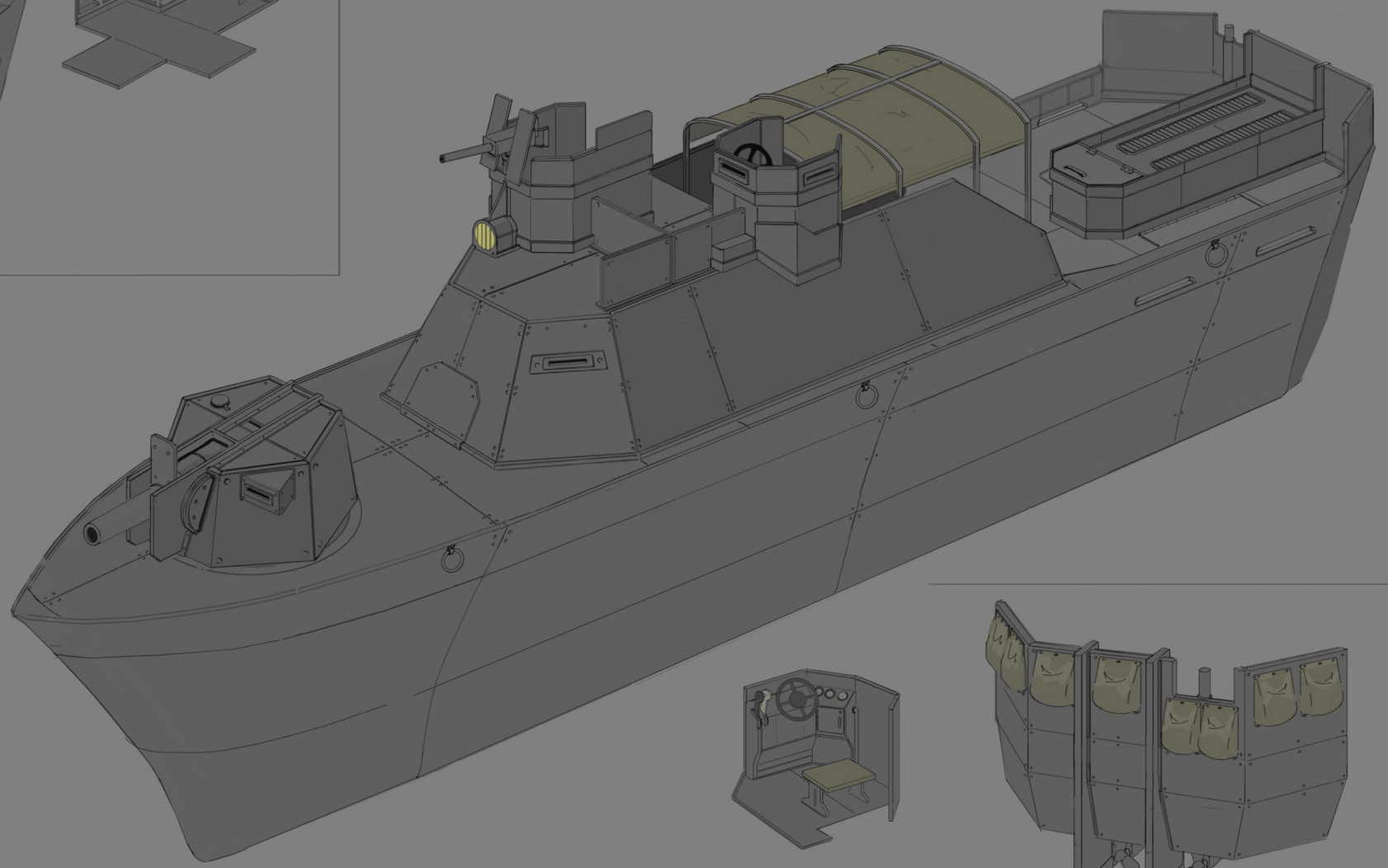



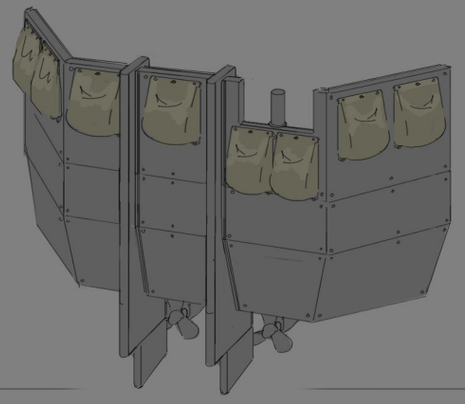

## New Colonial Gunboat

The new Charon gunboat was heavily scrutinized for balance. A few members on the team were very passionate about this replacement, and took personal interest in the design. As the role the boat fits in the meta evolves, there has been a focus back toward symmetry for the gunboats.

The original task for gunboats when planning the Naval Warfare update was that they could not damage the larger ships, but now they are now the only small ships that can effectively threaten large ships. This change played a part in opening up the field for all the new small early game boats.

*74b-1 Ronan Gunship*

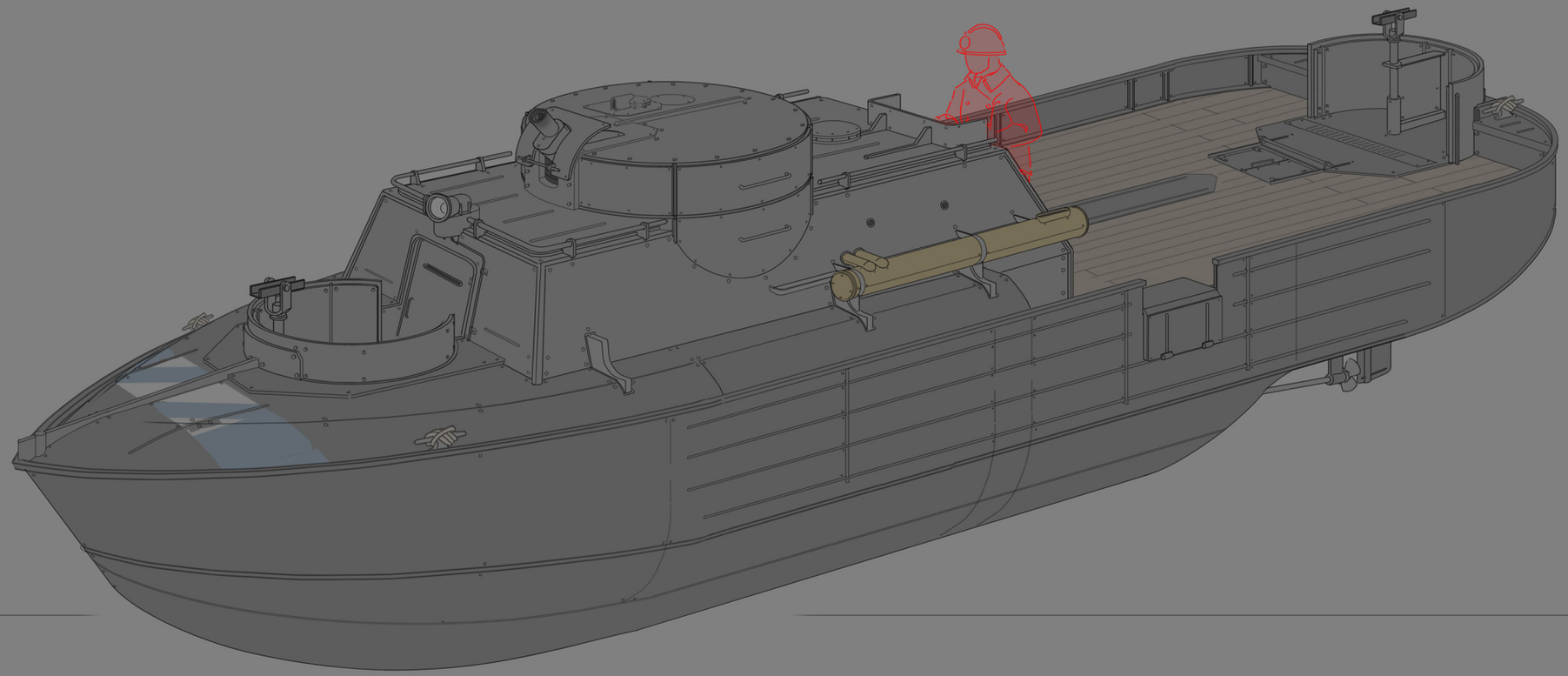

## The Trouble Maker

The Warden Gunboat was designed to look like a modified speed boat. Following the idea that Warden vehicles have an artsy, sleek, over-engineered look the design was meant to look bespoke with no future variants.

As an example of a change that had a large impact on the game, there was originally no plan to add interiors to the boat. However, that version had an issue mounting the front tripod gun, and a request to try adding an interior was made as a fix. These changes were made directly to the block-in model without any additional concept art support.

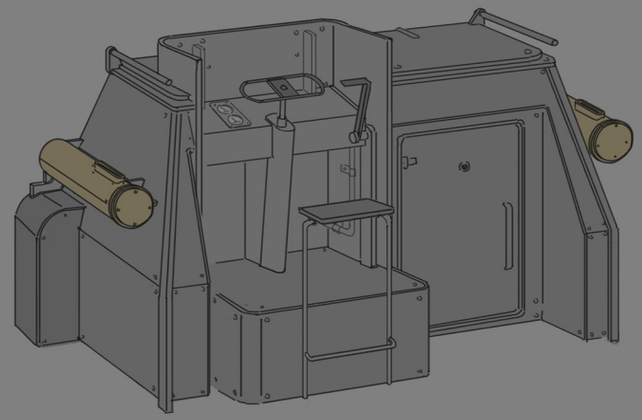

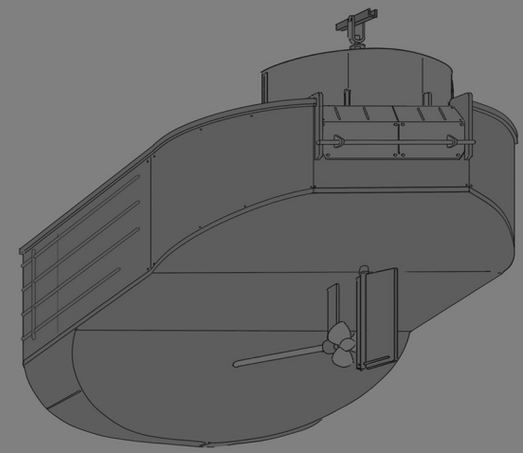

*Conqueror*

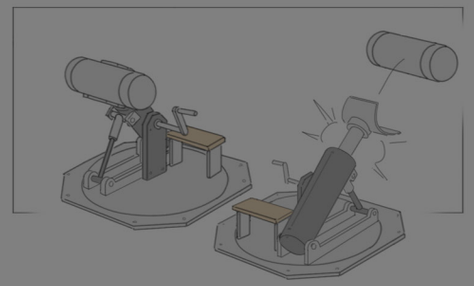

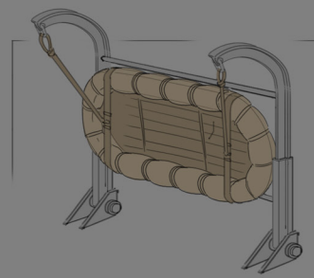

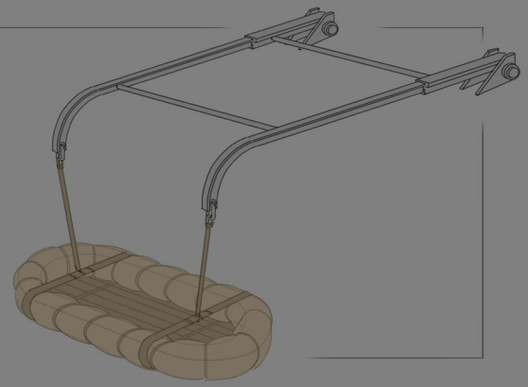

*Life boats were designed but not implemented.*

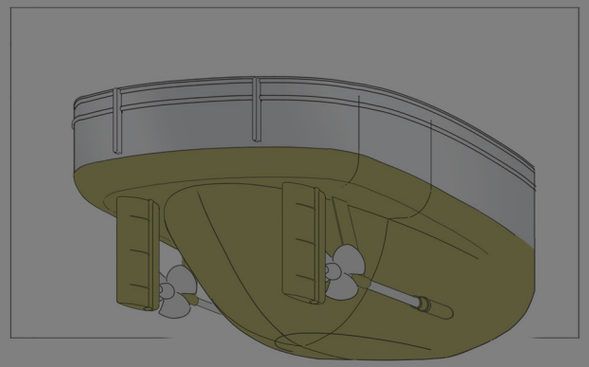

## Colonial Destroyer

This was the first boat design for the Naval Warfare update The Colonial Destroyer was a test bed for all the features that would make up all the large ships in the game. Interiors, engine rooms, barracks and the entire water vehicle physics system were developed alongside the Conqueror.

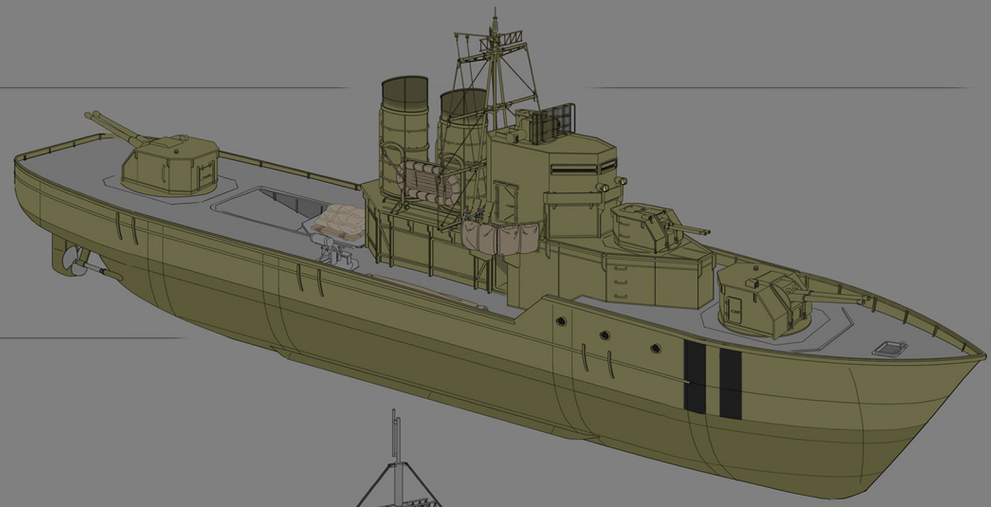

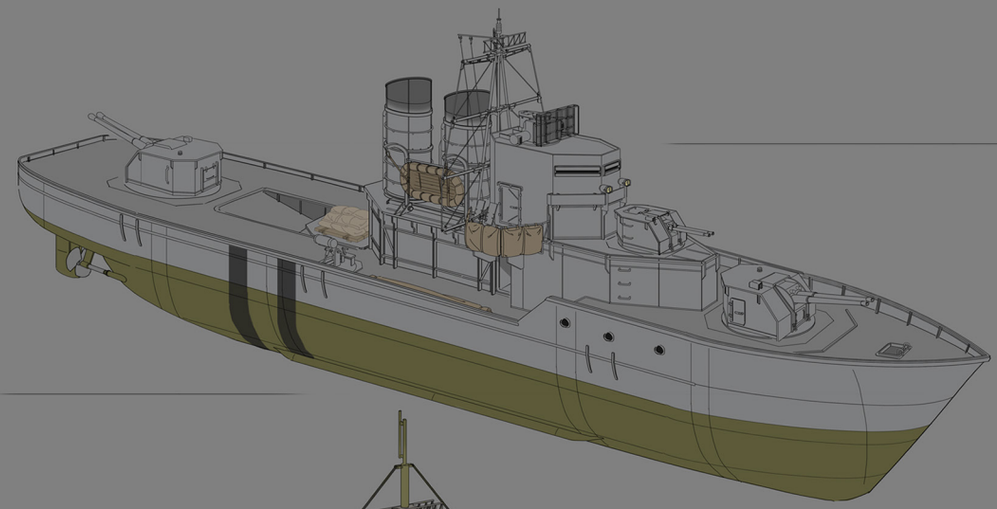

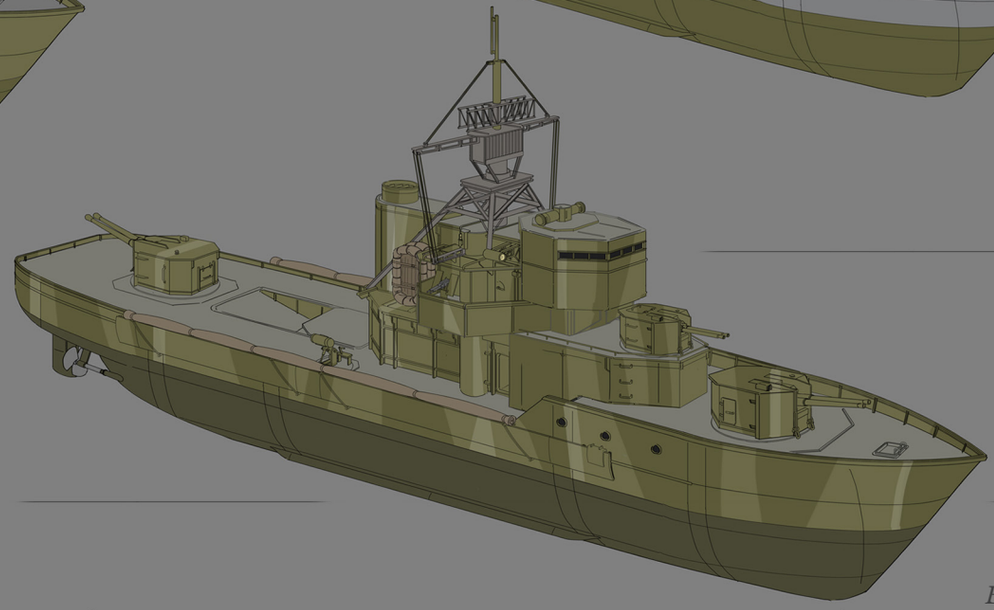

*Early sketches and alternate designs.*

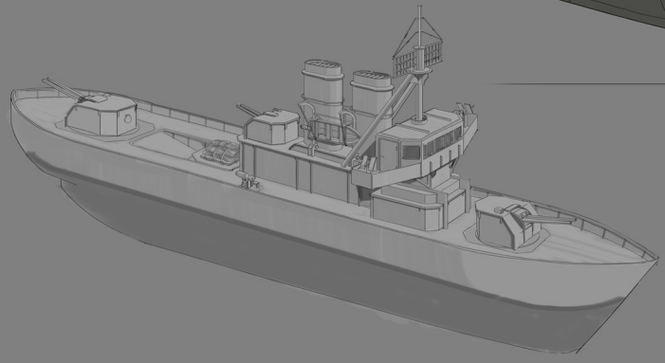

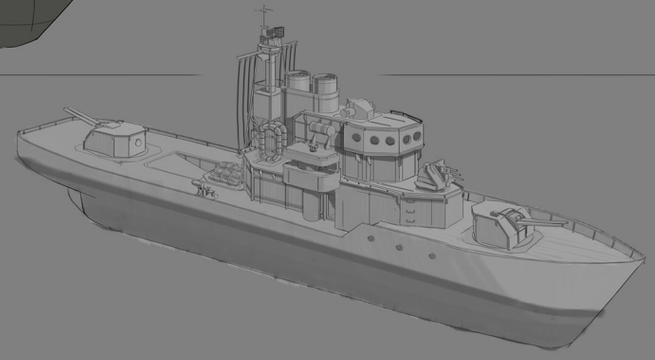

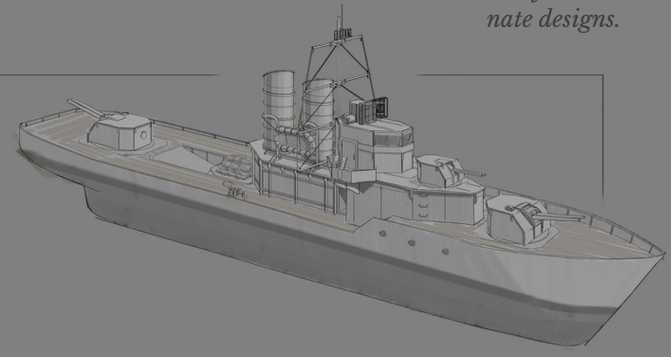

## Warden Frigate

*Blacksteele*

The Warden Frigate was added after the initial update was out, and players had their hands on the Naval Warfare update. Since all the gameplay systems were working, it was more a matter of figuring out what weight, size, and displacement of ship we wanted. At this time, concepts were drawn for a number of possibilities before it was decided to make a smaller lighter frigate.

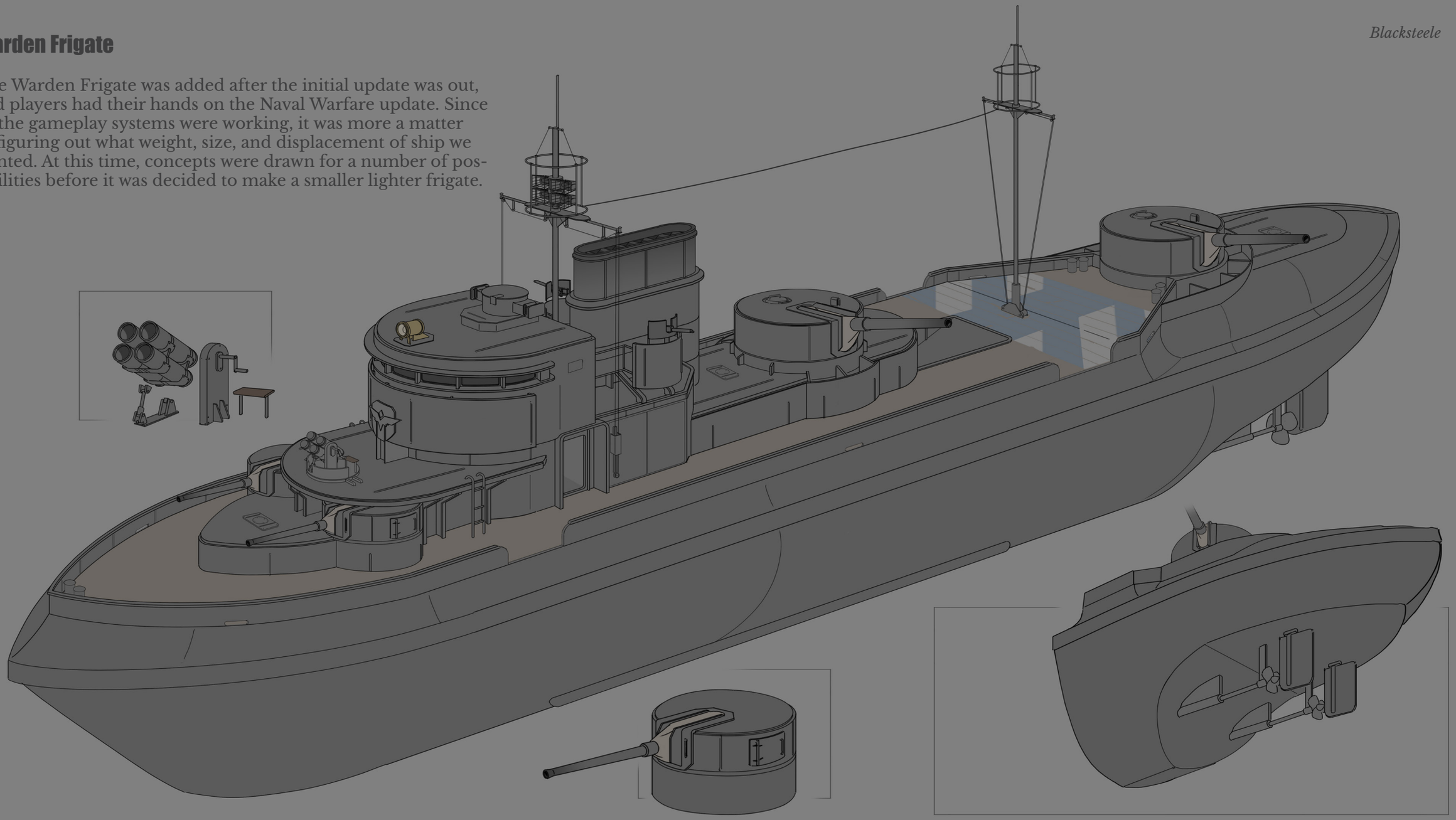

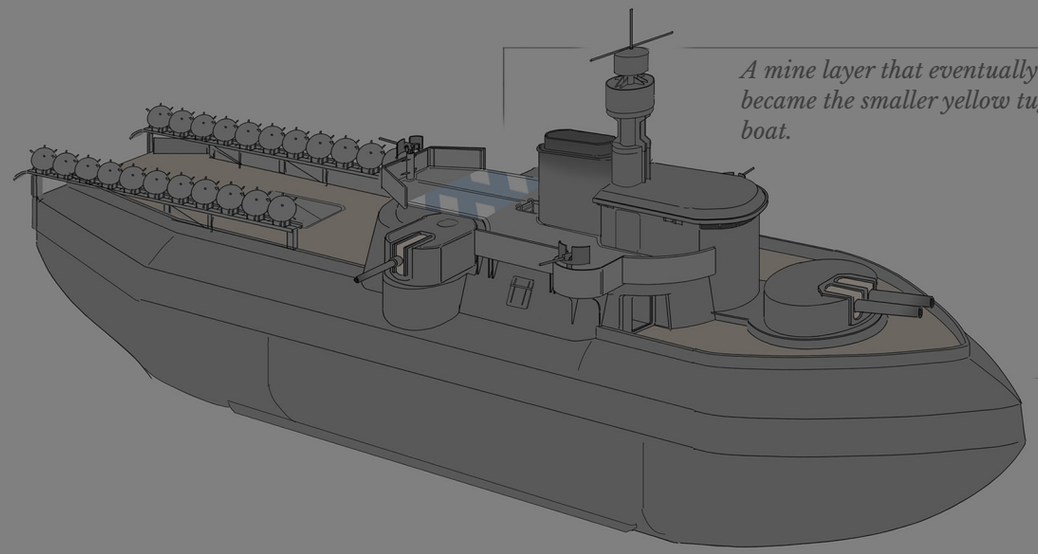

*A mine layer that eventually became the smaller yellow tug boat.*

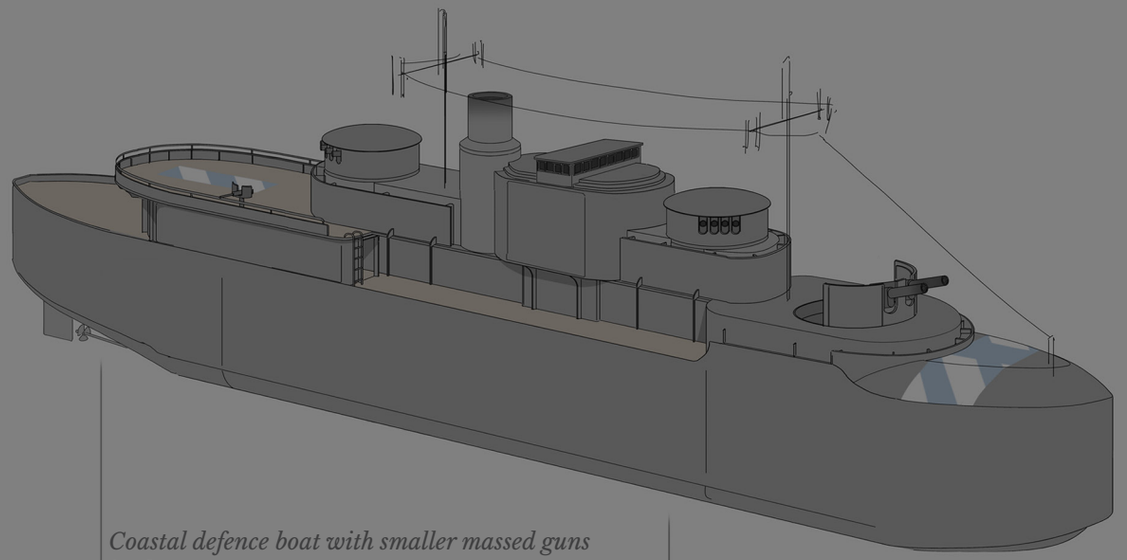

*Coastal defence boat with smaller massed guns in the turrets.*

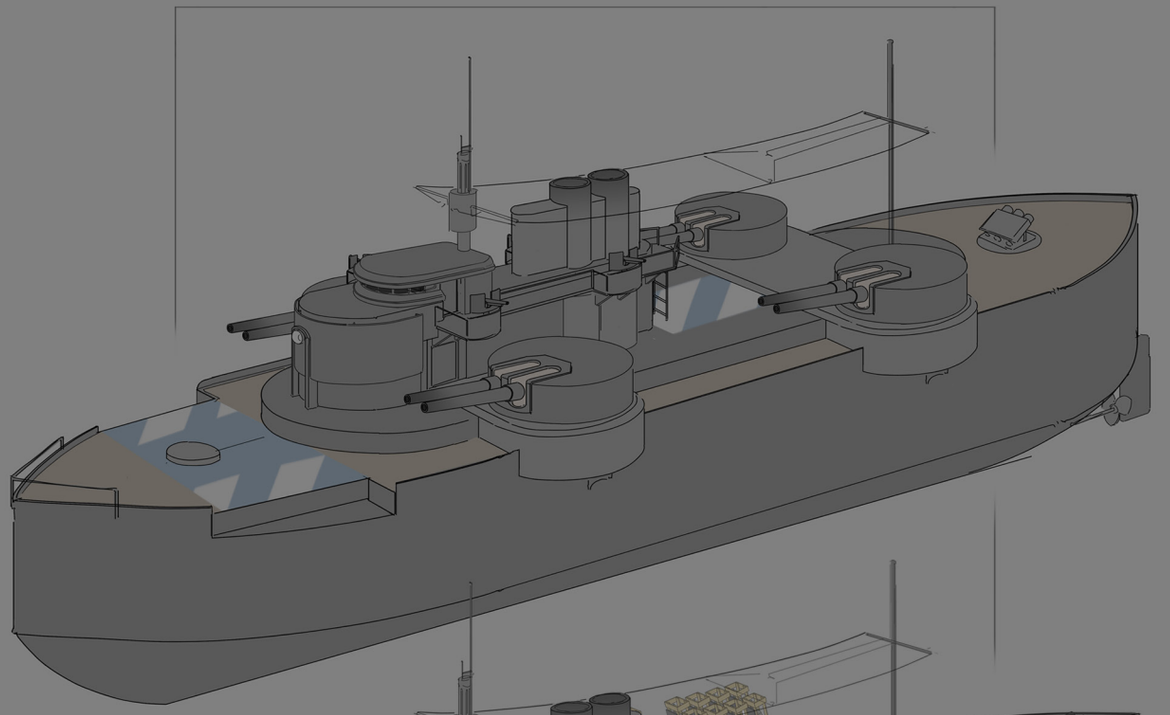

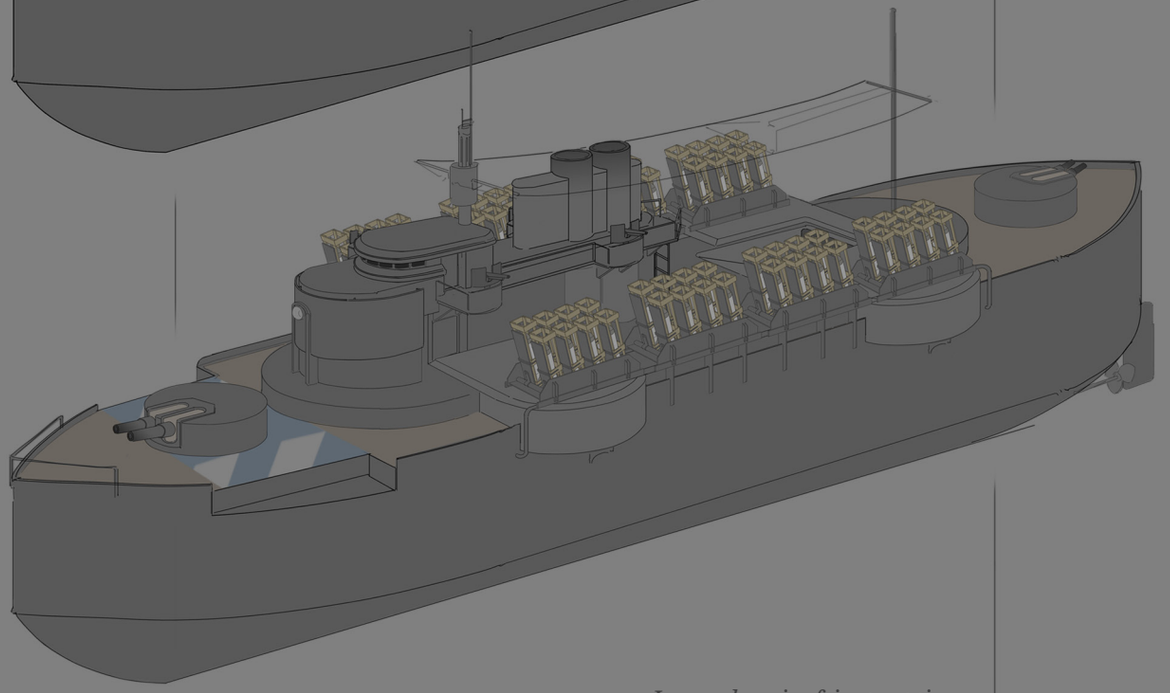

*Larger heavier frigate options.*

*Titan*

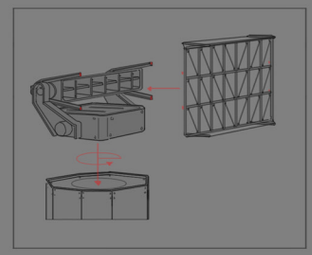



With each new boat we were creating new roles and seats for players. Throughout development we were figuring out all the 'working' features of the boats.

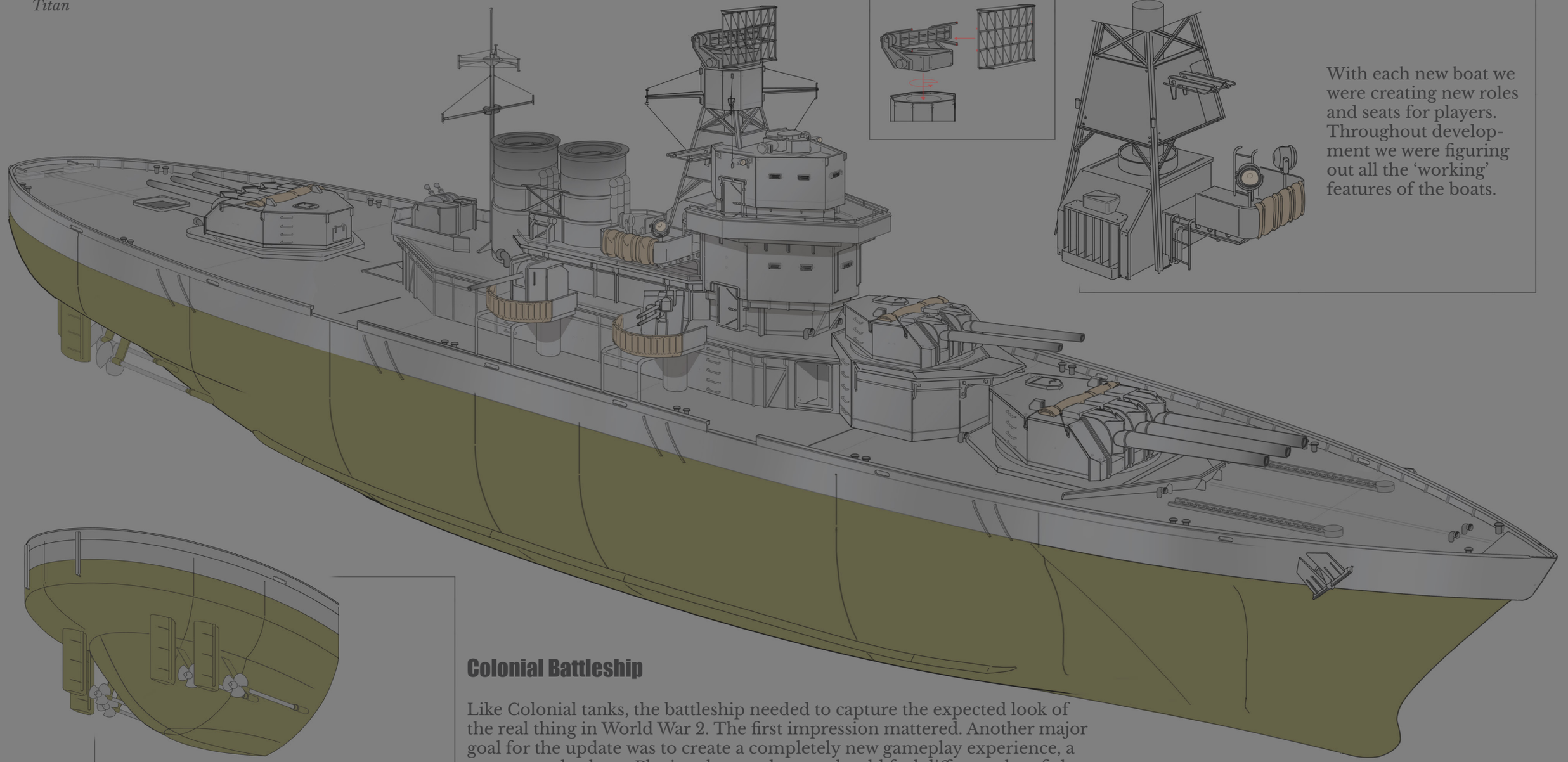



## Colonial Battleship

Like Colonial tanks, the battleship needed to capture the expected look of the real thing in World War 2. The first impression mattered. Another major goal for the update was to create a completely new gameplay experience, a new gameplay loop. Playing the naval game should feel different then fighting on the front lines or playing logi. This idea was inspirational, and pushed the gameplay and new battleships farther than we thought possible.

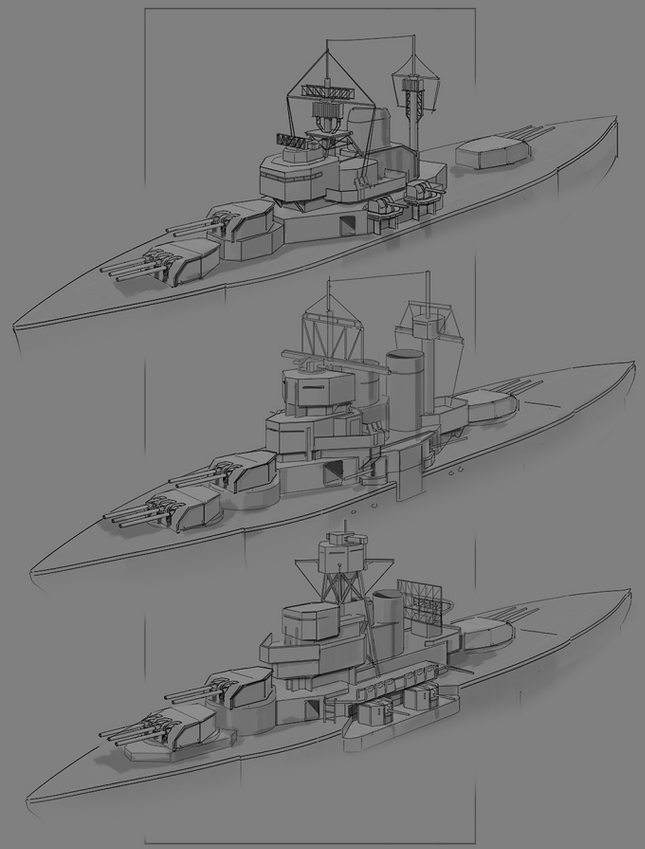

*Alternate designs and interior layouts.*

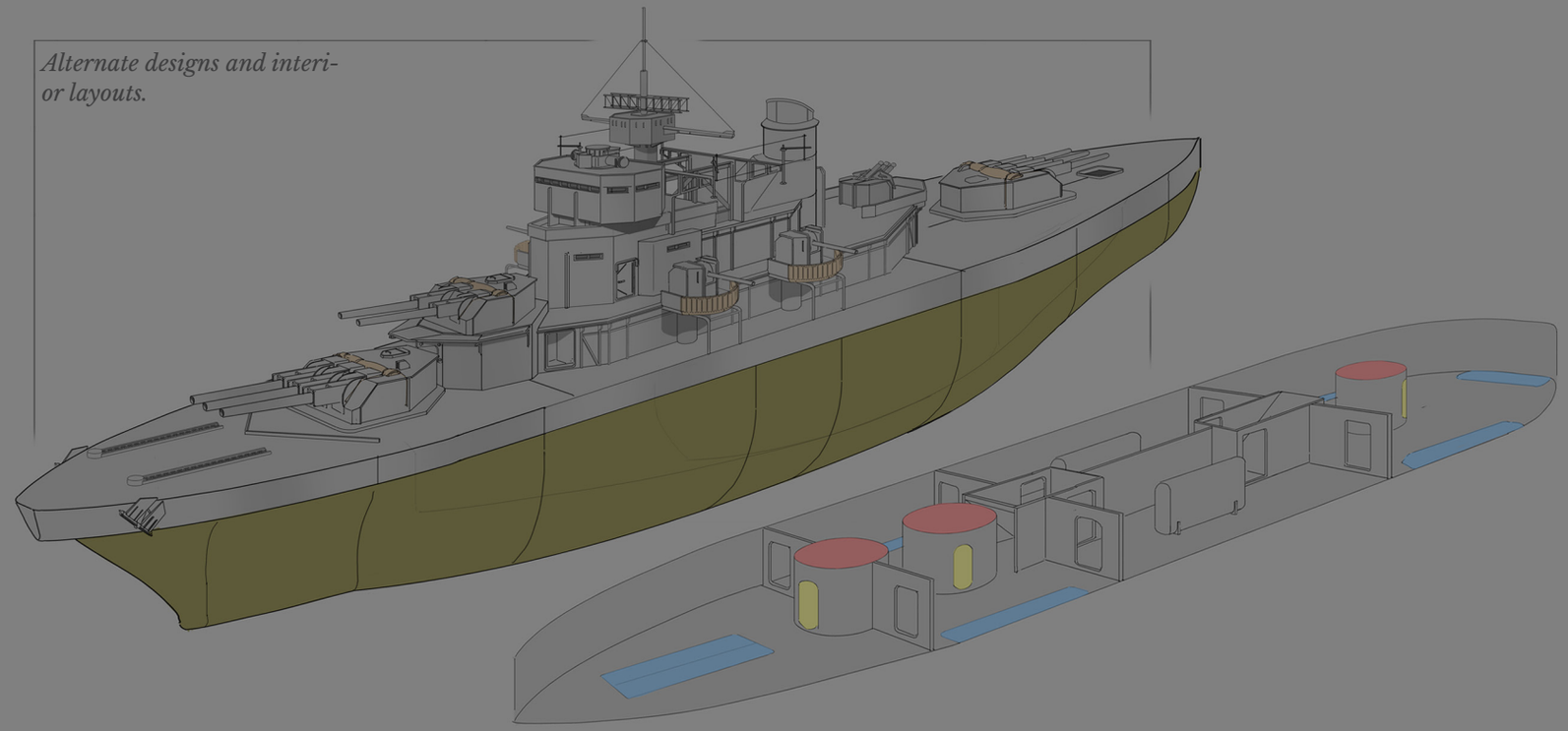

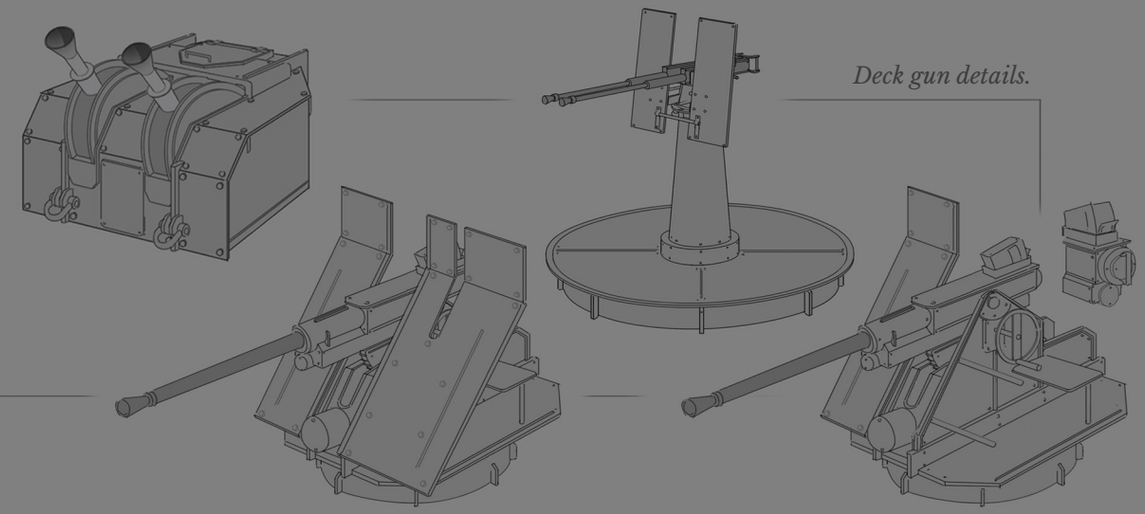

*Deck gun details.*

Game designers were constantly worried the battleships were too big for the world of the game. I was worried the boats would look cartoonishly small and fought for them to be as big as I could get. Foxhole is full of abstractions in scale and we had to find the right proportions of all the details that made up the battleships. Even though our ships are nowhere close to their real world versions, I didn't want to end up with vehicles that looked like 'toys'. The end result of everyone's efforts was a giant success. - Julian

*Callahan*

## Warden Battleship

The Warden battleship let us explore the aesthetics of earlier pre-dreadnought era warships. The age difference between the references of the two factions was an allowance we gave ourselves to really capture a ‘regal’ look for the Warden Navy. The seemingly odd middle turret placement was meant to capture that overengineered look, while making broadsides more important when in combination with the smaller side turret. An effort was made to really lay out the boat’s armaments and interior spaces. Each boat was thought of as a level in a videogame unto itself.

A choice was made to make the Warden blue and white vehicle markings prominent on their ships. This was meant to flip the idea of the typically more visible Colonial vehicle markings. The goal was to make the two navies feel like a different armed force for each faction.

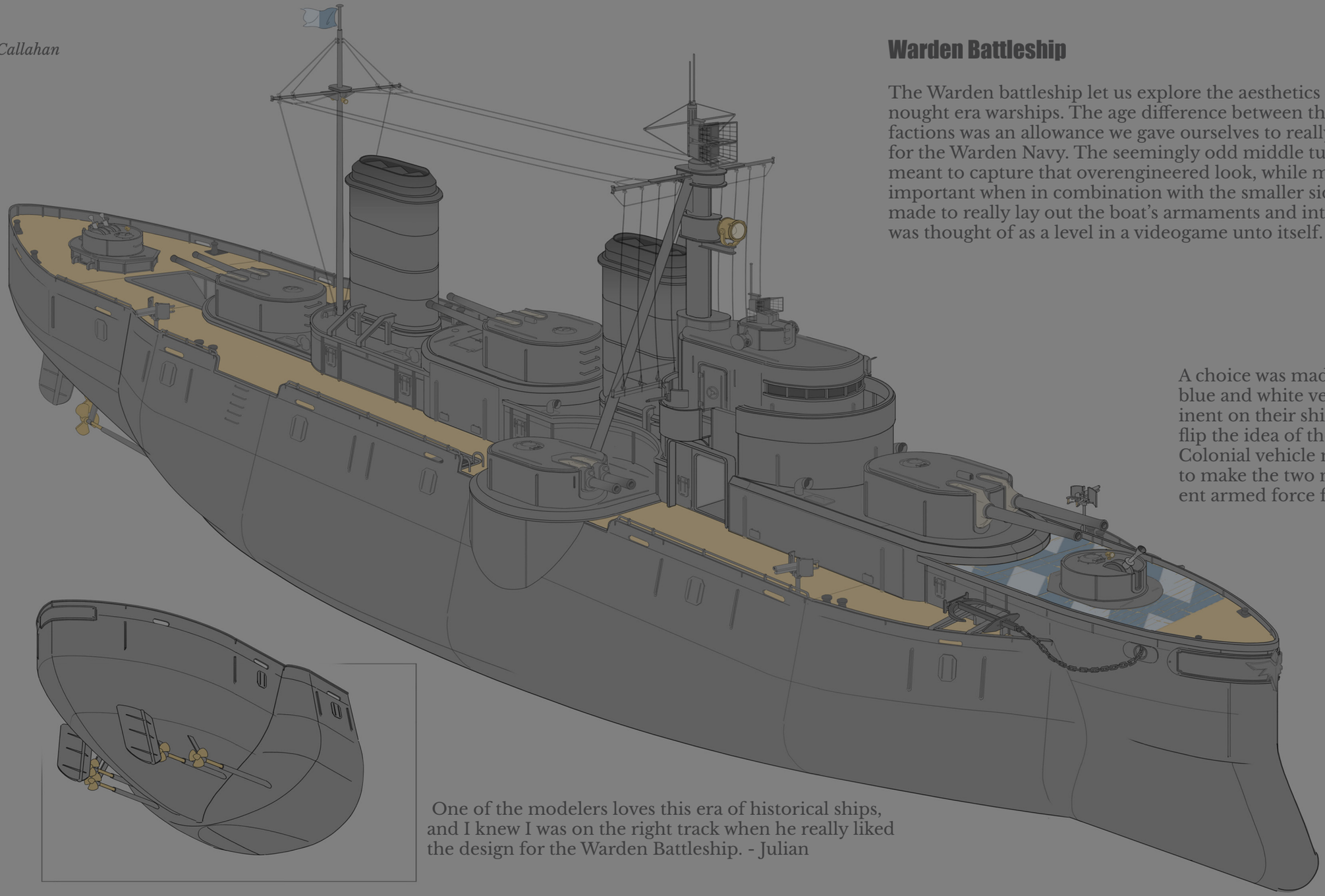



One of the modelers loves this era of historical ships, and I knew I was on the right track when he really liked the design for the Warden Battleship. - Julian

The seaplane carrier had a lot of unique technical challenges. Both the cranes and the turret-mounted plane catapults took a lot of effort and planning to get working correctly.

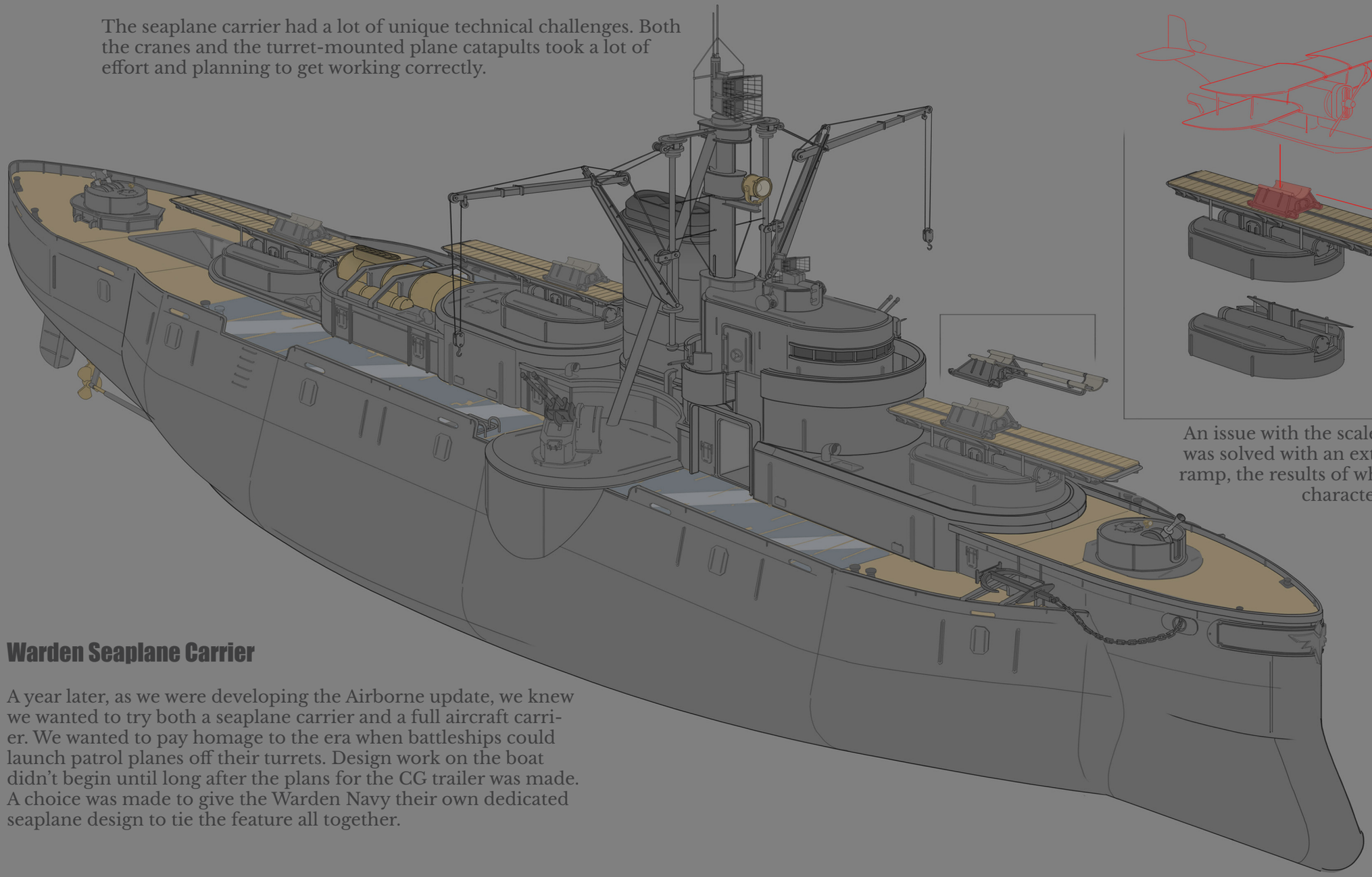

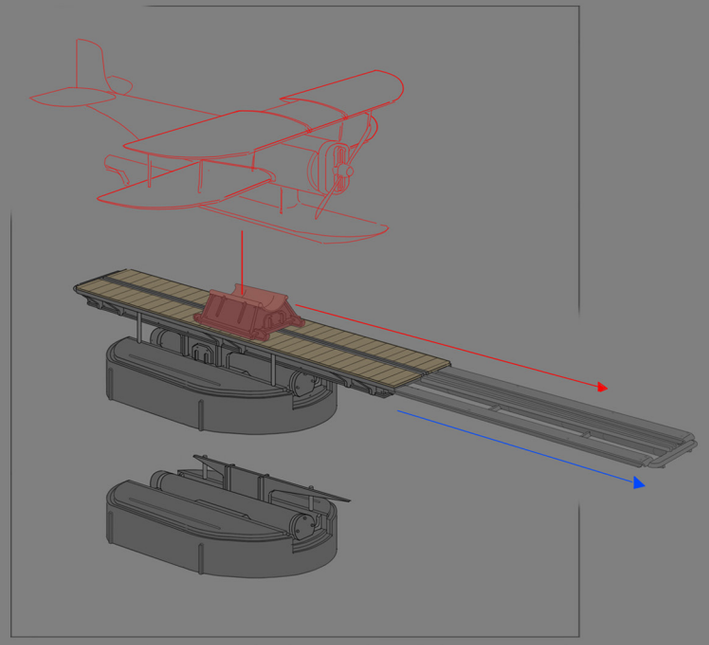

An issue with the scale of the catapult was solved with an extendable launch ramp, the results of which add a lot of character to the vehicle.

## Warden Seaplane Carrier

A year later, as we were developing the Airborne update, we knew we wanted to try both a seaplane carrier and a full aircraft carrier. We wanted to pay homage to the era when battleships could launch patrol planes off their turrets. Design work on the boat didn't begin until long after the plans for the CG trailer was made. A choice was made to give the Warden Navy their own dedicated seaplane design to tie the feature all together.

*Mercy*

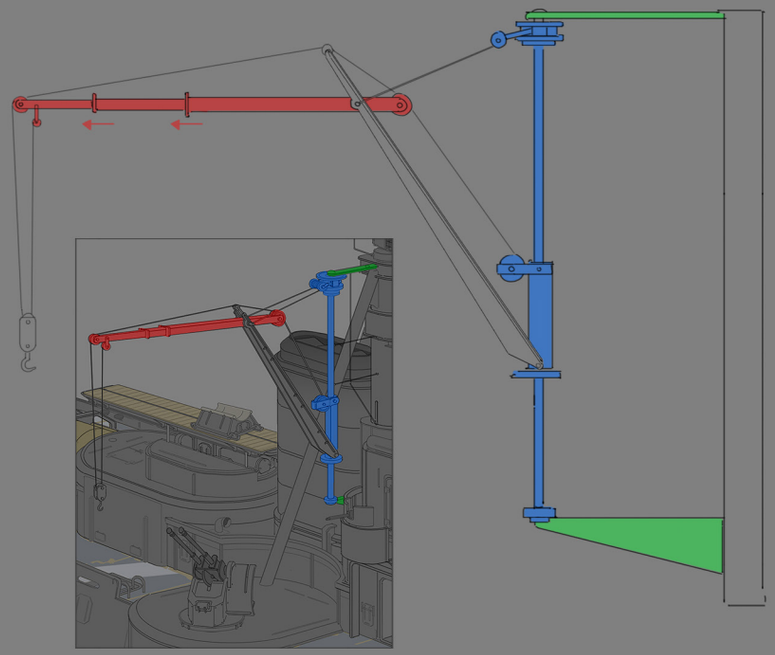

## Large ship interiors

Due to the limitation of only having one concept artist at the time, the interiors of the large ships were only mapped out with simple drawings. The modelers pulled double duty to help flesh out the inside of the boats. They are to thank for the added personality that the boats are brimming with.

## Naval turrets

As the Naval Warfare update was being worked on, game designers needed to add AI turrets to the large ships for balance. The visual design of the barrels came from pom pom guns on ships in World War 2

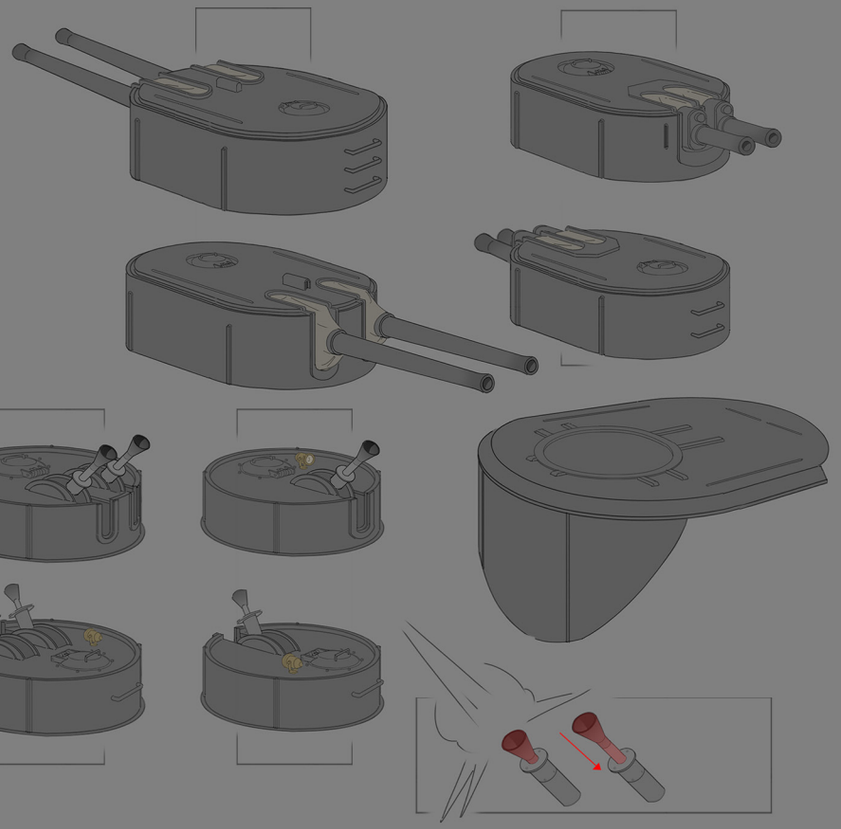

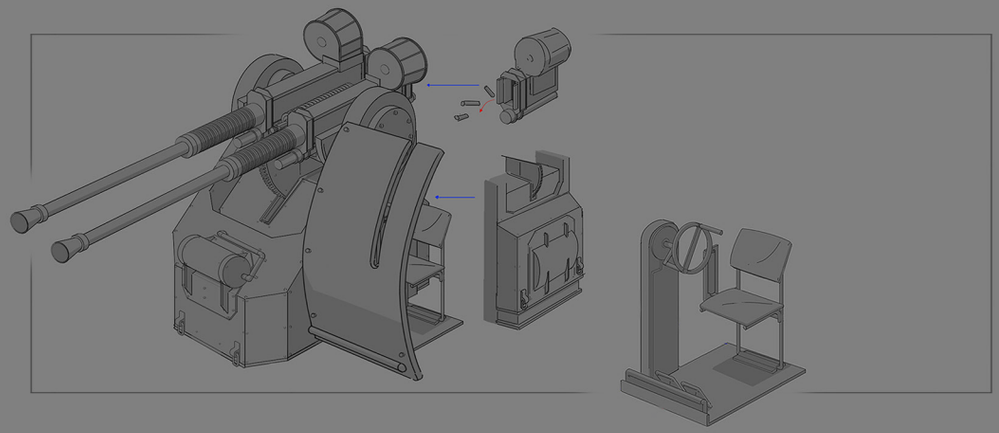

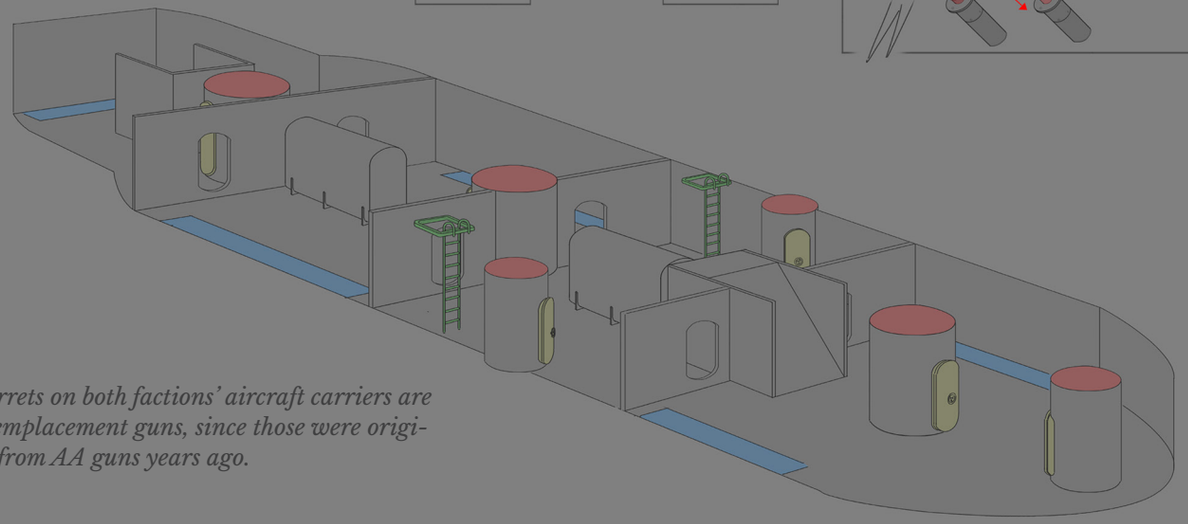

*The anti air turrets on both factions' aircraft carriers are based on their emplacement guns, since those were originally designed from AA guns years ago.*

*The sword and wings logo was almost the Colonial faction logo. As the Airforce logo, it is an homage to the start of the project.*



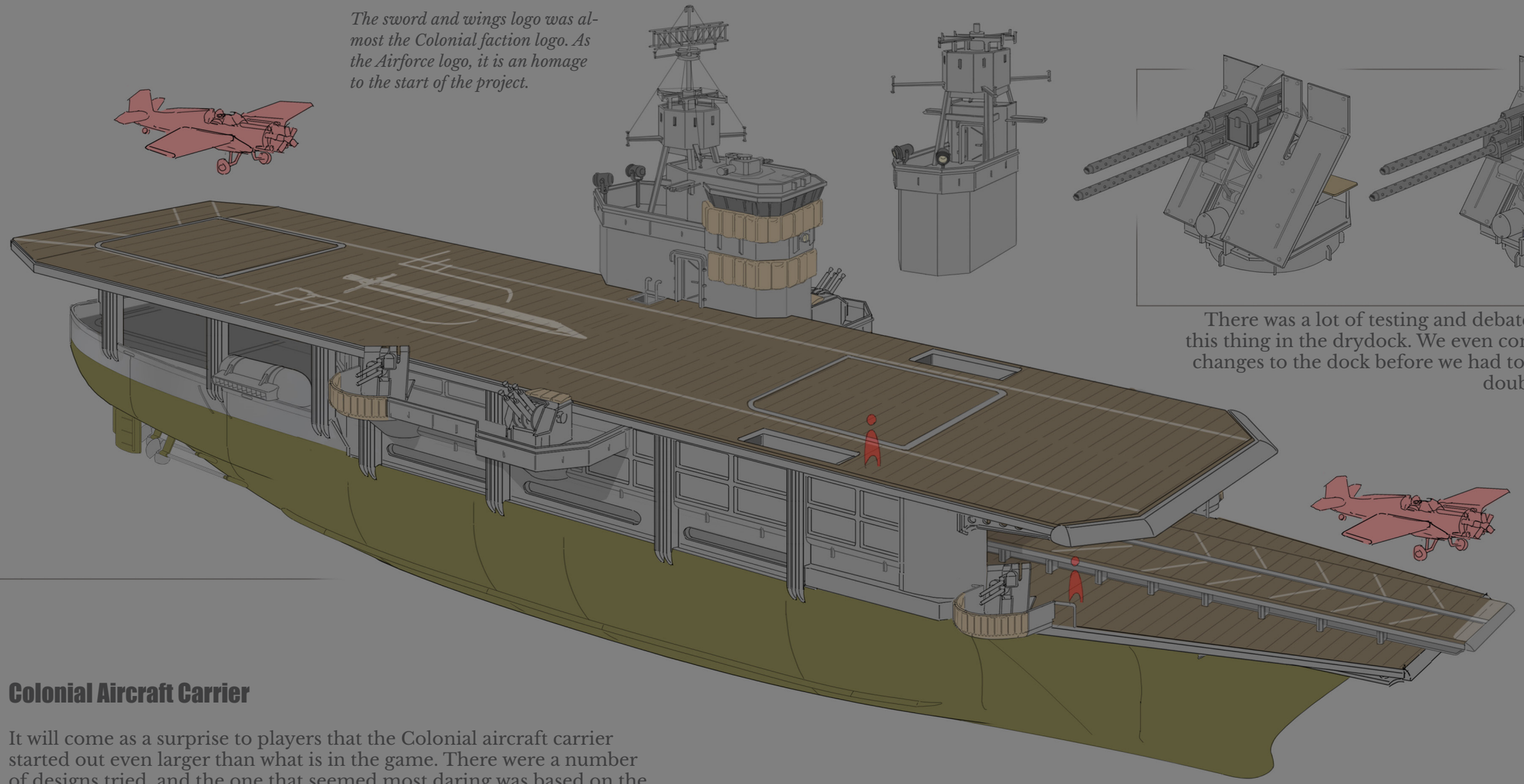



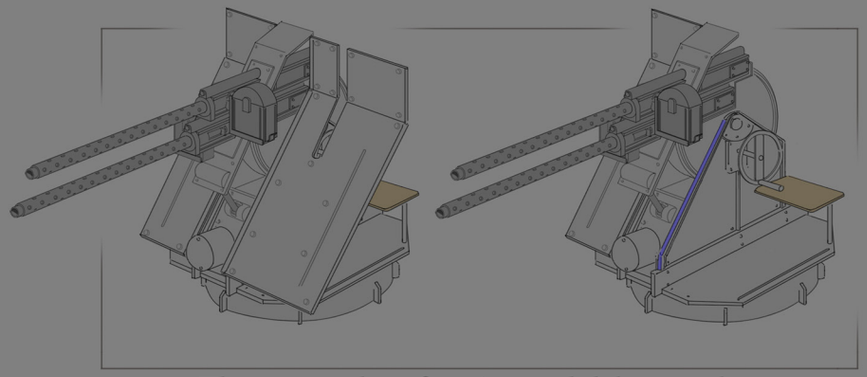

There was a lot of testing and debate on how to get this thing in the drydock. We even considered minor changes to the dock before we had to reconsider the double decker boat.



## Colonial Aircraft Carrier

It will come as a surprise to players that the Colonial aircraft carrier started out even larger than what is in the game. There were a number of designs tried, and the one that seemed most daring was based on the British aircraft carrier the 'HMS Furious'. We already knew we would have the launch catapults from the Warden carrier, so we shot big - too big, it turned out, as the boat would not fit into the dry dock. Eventually we scaled back to an earlier concept for the aircraft carrier.

*Unused Aircraft Carrier*

*What did survive was the elevator as we all thought, for rule of cool it was worth it and added-life to the boat.*

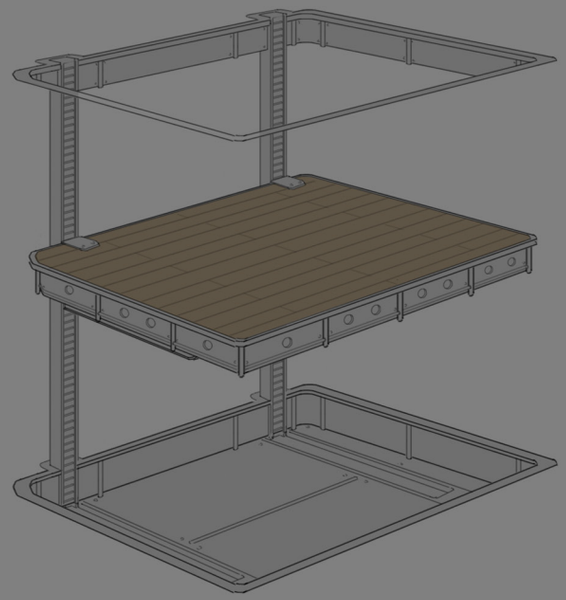

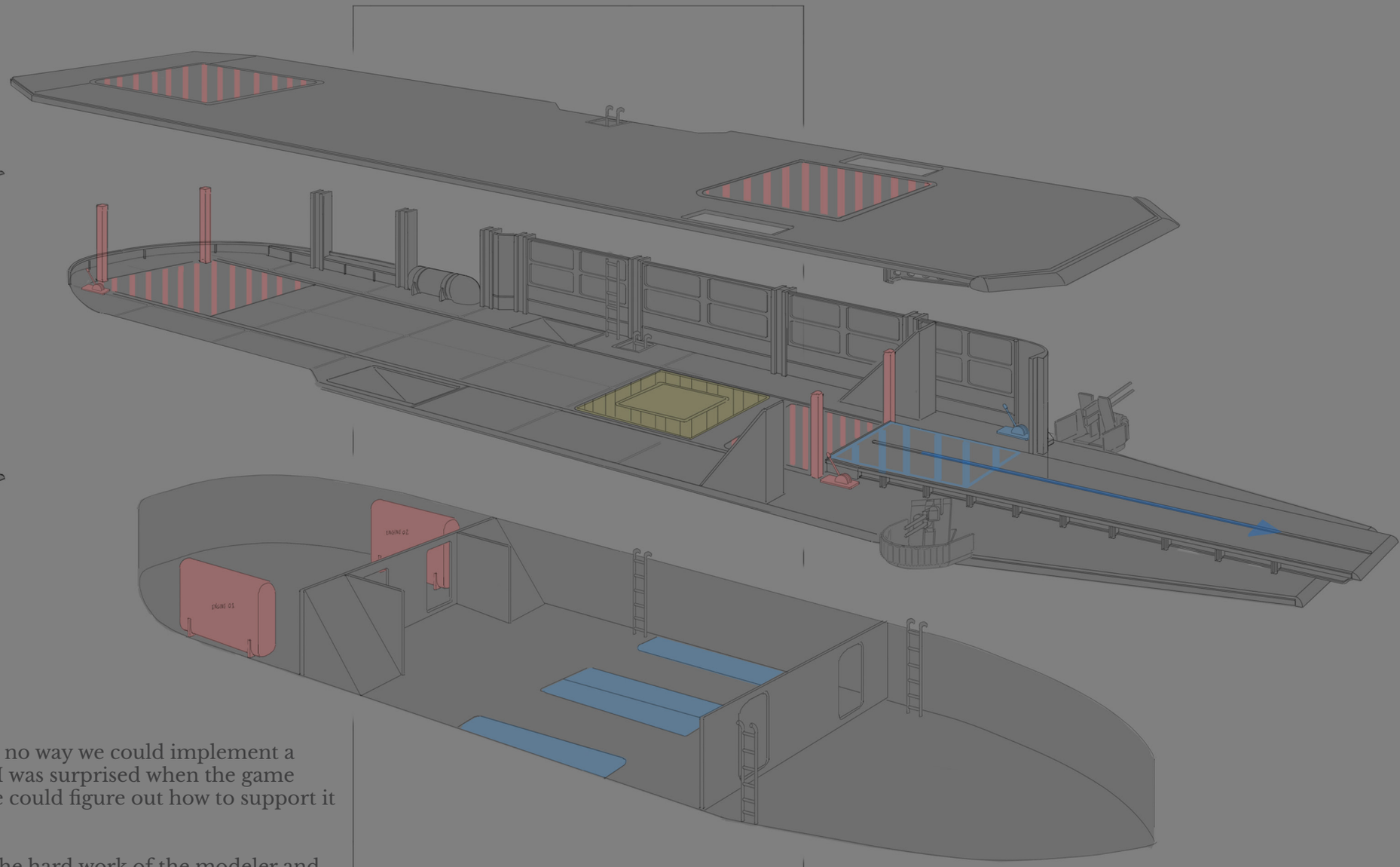


## Double deck interior

When the concept was pitched, there was no way we could implement a three story interior on a moving vehicle. I was surprised when the game designers wanted to go for it and see if we could figure out how to support it in the code. - Julian

The interior that is on the final boat was the hard work of the modeler and game designer figuring out the best way to make everything come together.

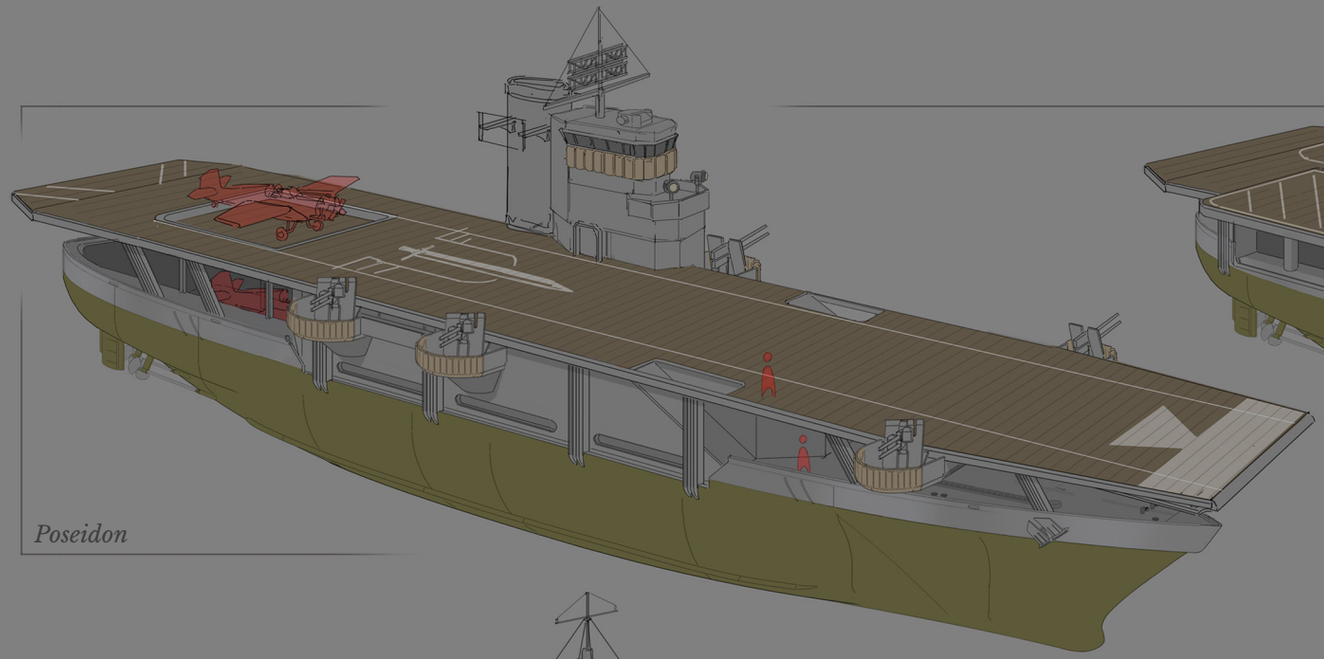

*Poseidon*

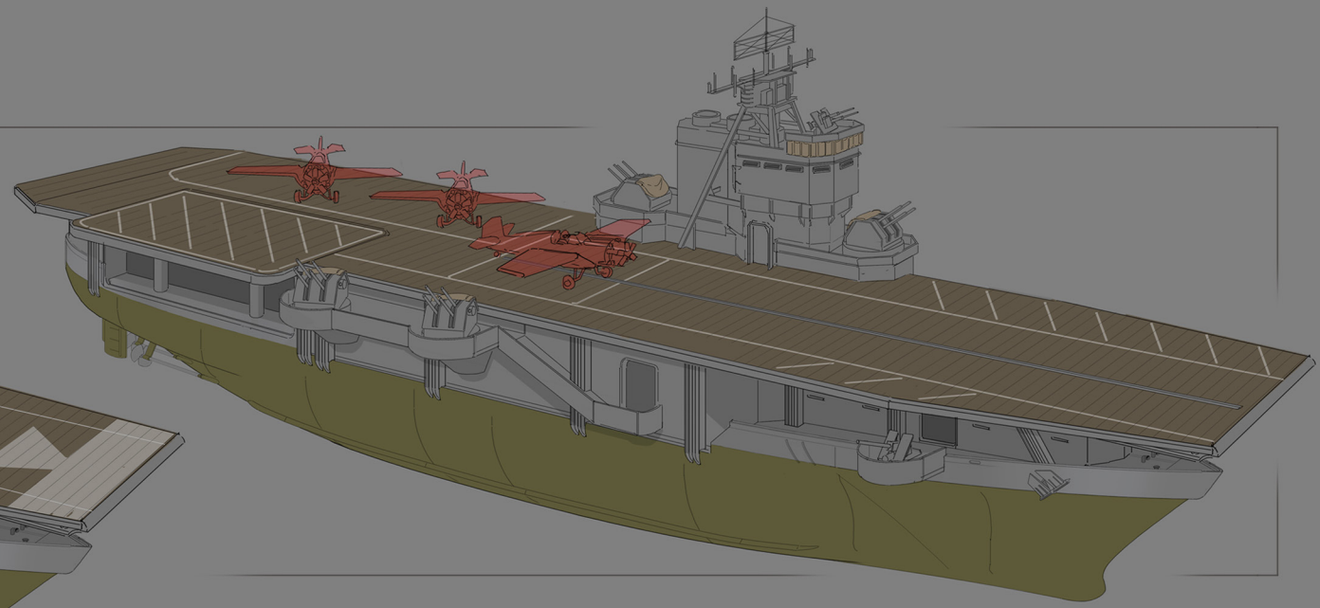

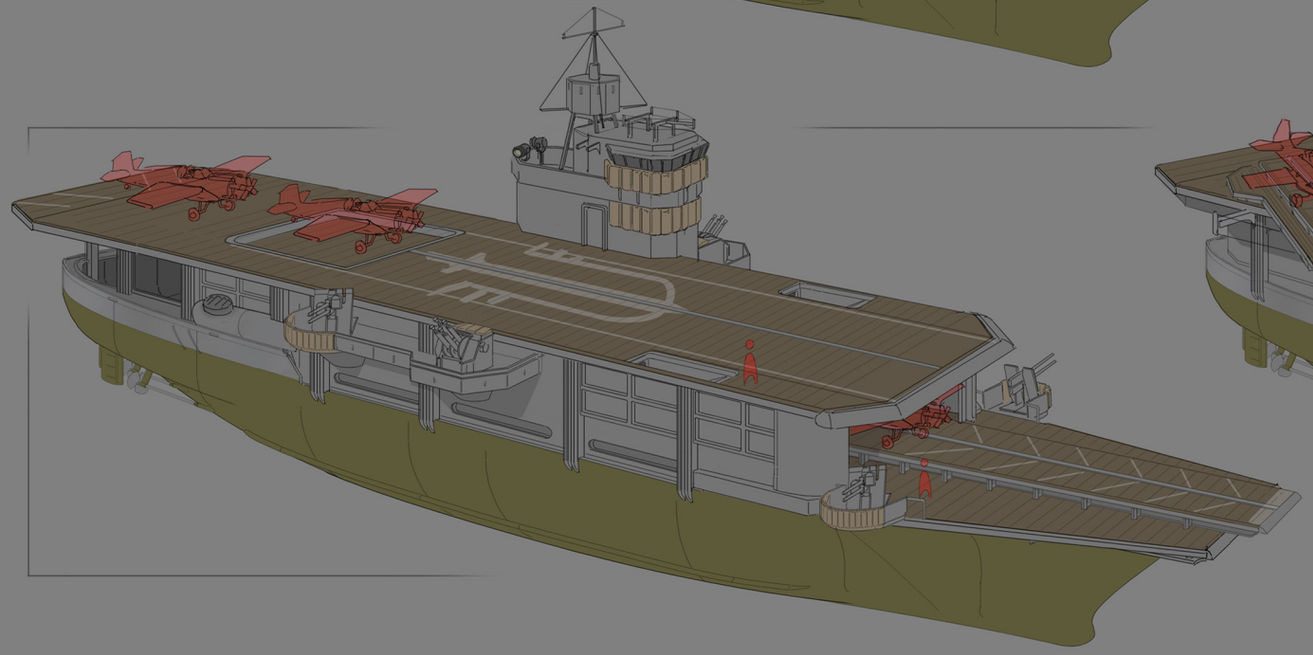

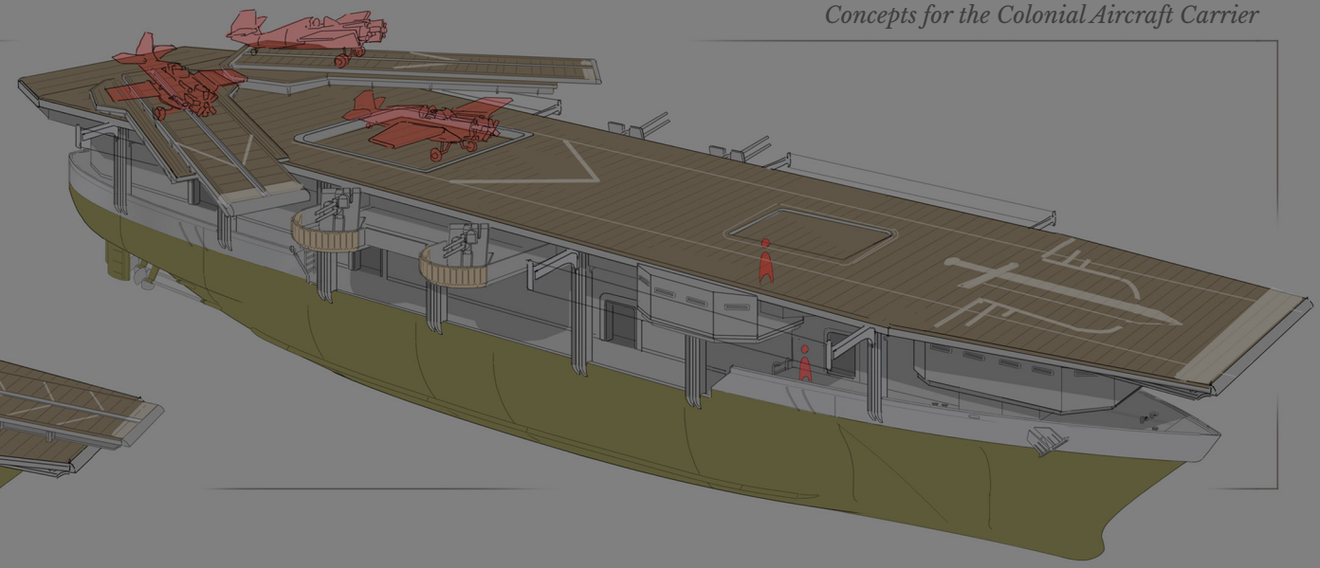

*Concepts for the Colonial Aircraft Carrier*

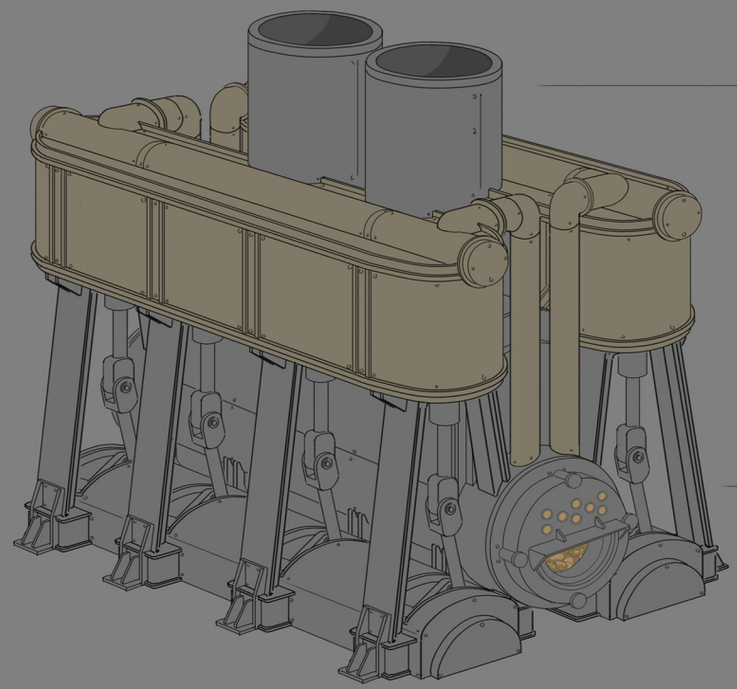

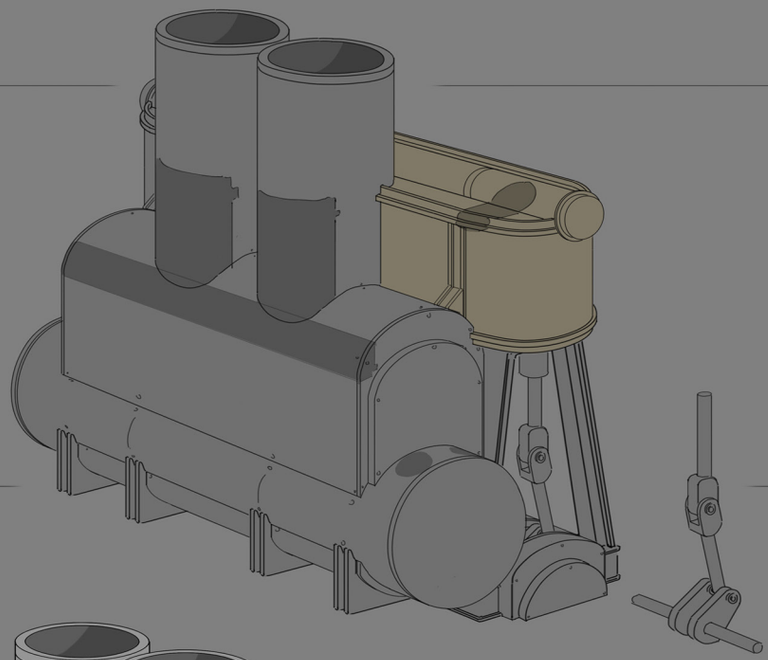

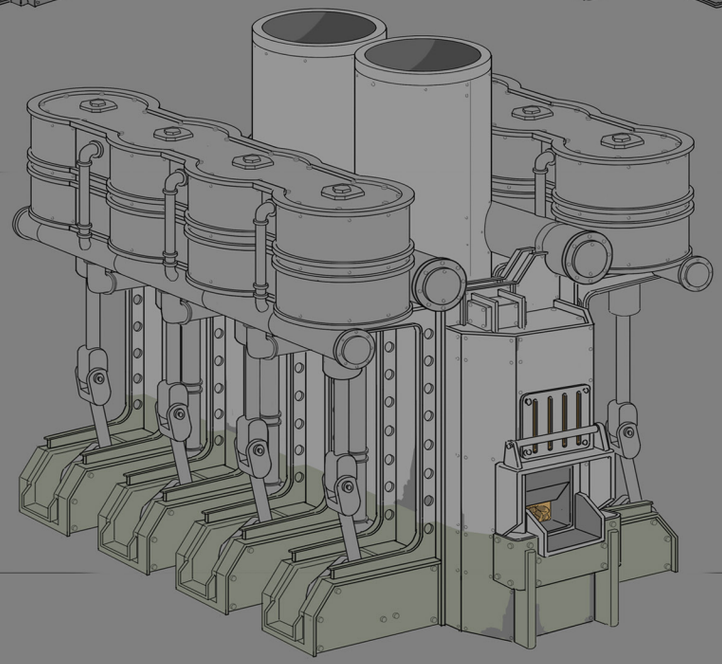

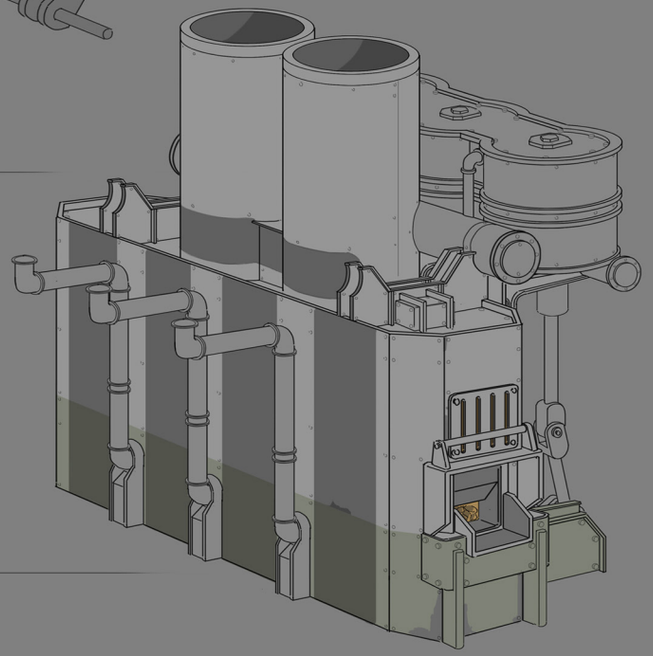

Faction specific designs were developed for the boat engines. These were modular, and could be placed in all future boats. The engines being a key interaction point would add a lot of character to the interiors of the ships.

The faction specific landing boats were fun and easy designs. By this point in the project, I had an intuitive understanding of the themes of each faction. There was a debate on if there should only be one neutral design, since it spawned from a neutral boat. We made the right call in the end. - Julian

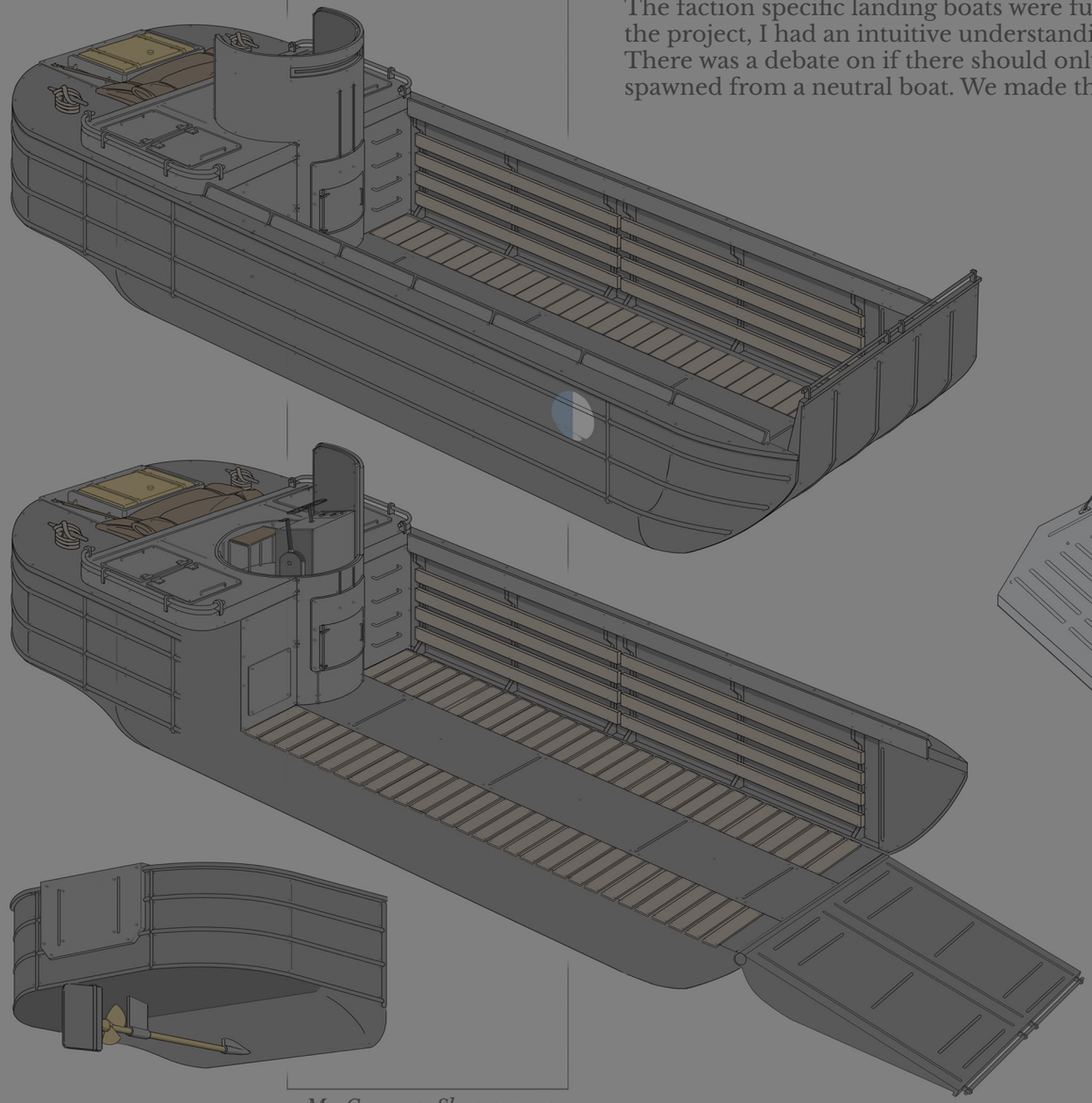

*MacConmara Shorerunner*

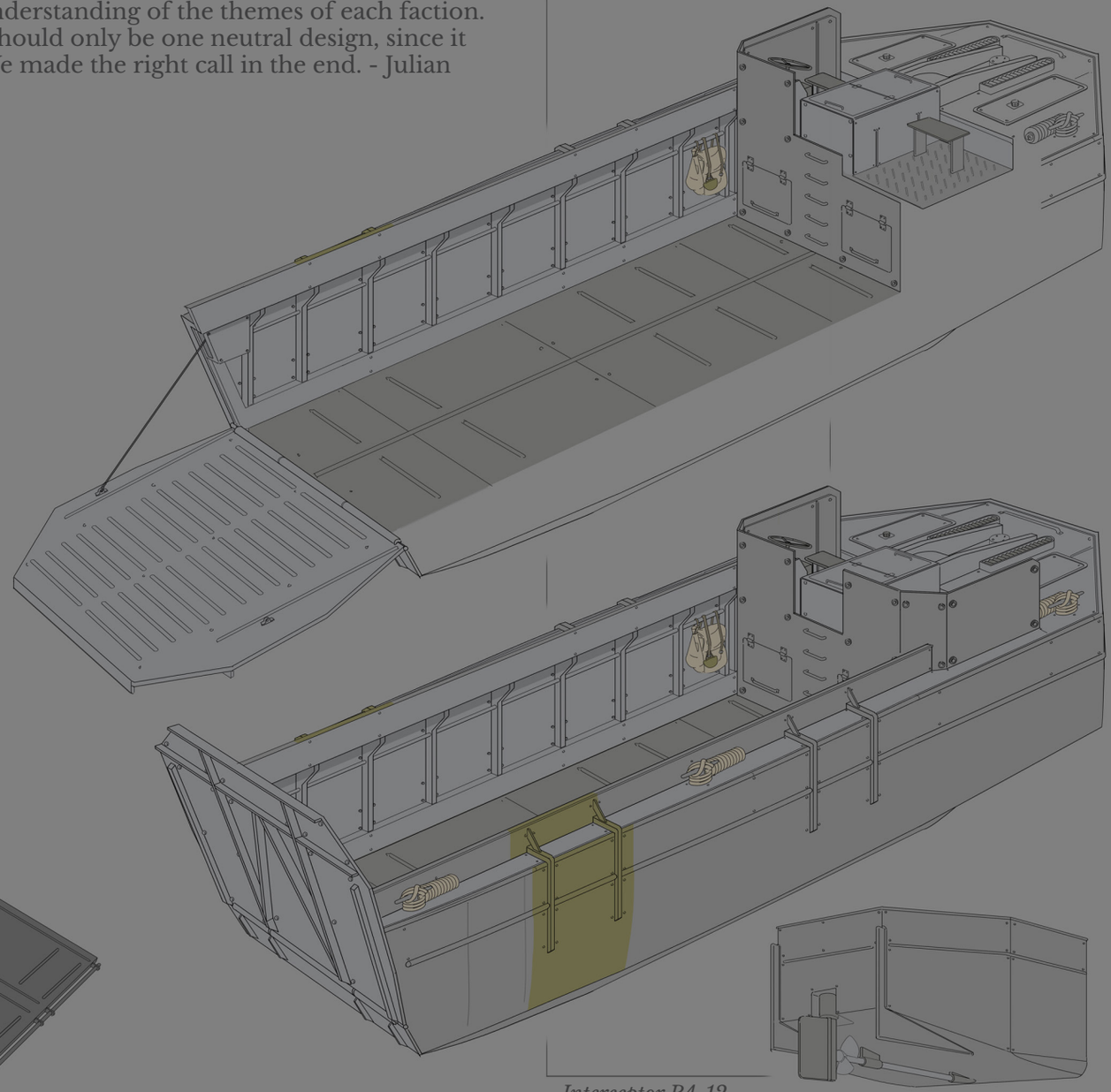

*Interceptor PA-12*

## Warden Submarine

The other giant objective in the Naval Warfare update was to have fully playable submarines. The technical task of making it work in engine was complex, to the point the feature was reconsidered a few times, but everyone wanted it to be included.

The artists and programmers devoted a lot of time to researching the function and operation of submarines.We needed a thorough understanding so we could abstract it down to look and feel right in the world of Foxhole.

*A HMG turret was dropped on the final in-game asset.*

*Warden blue and white navy insignia started on the sub.*

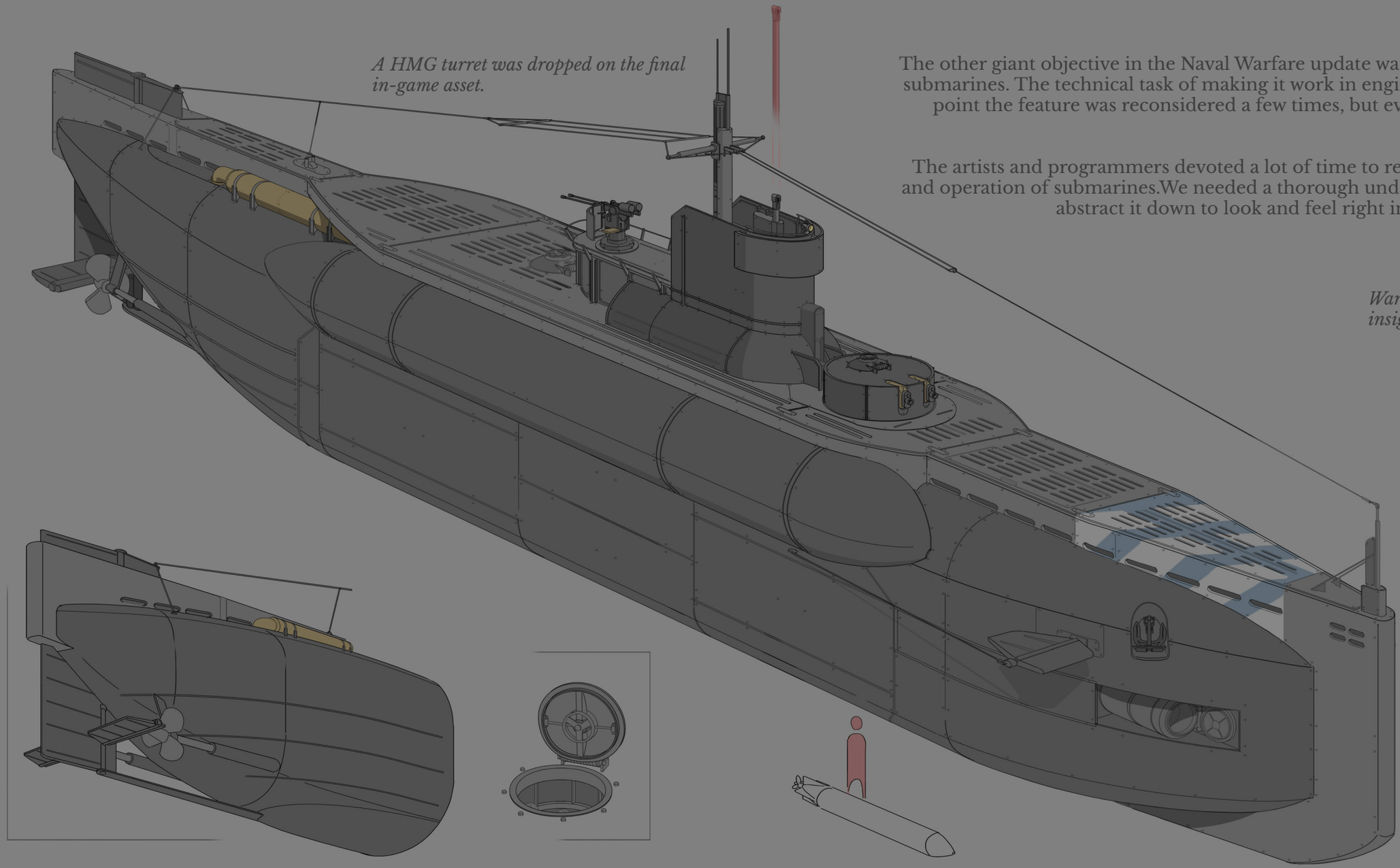

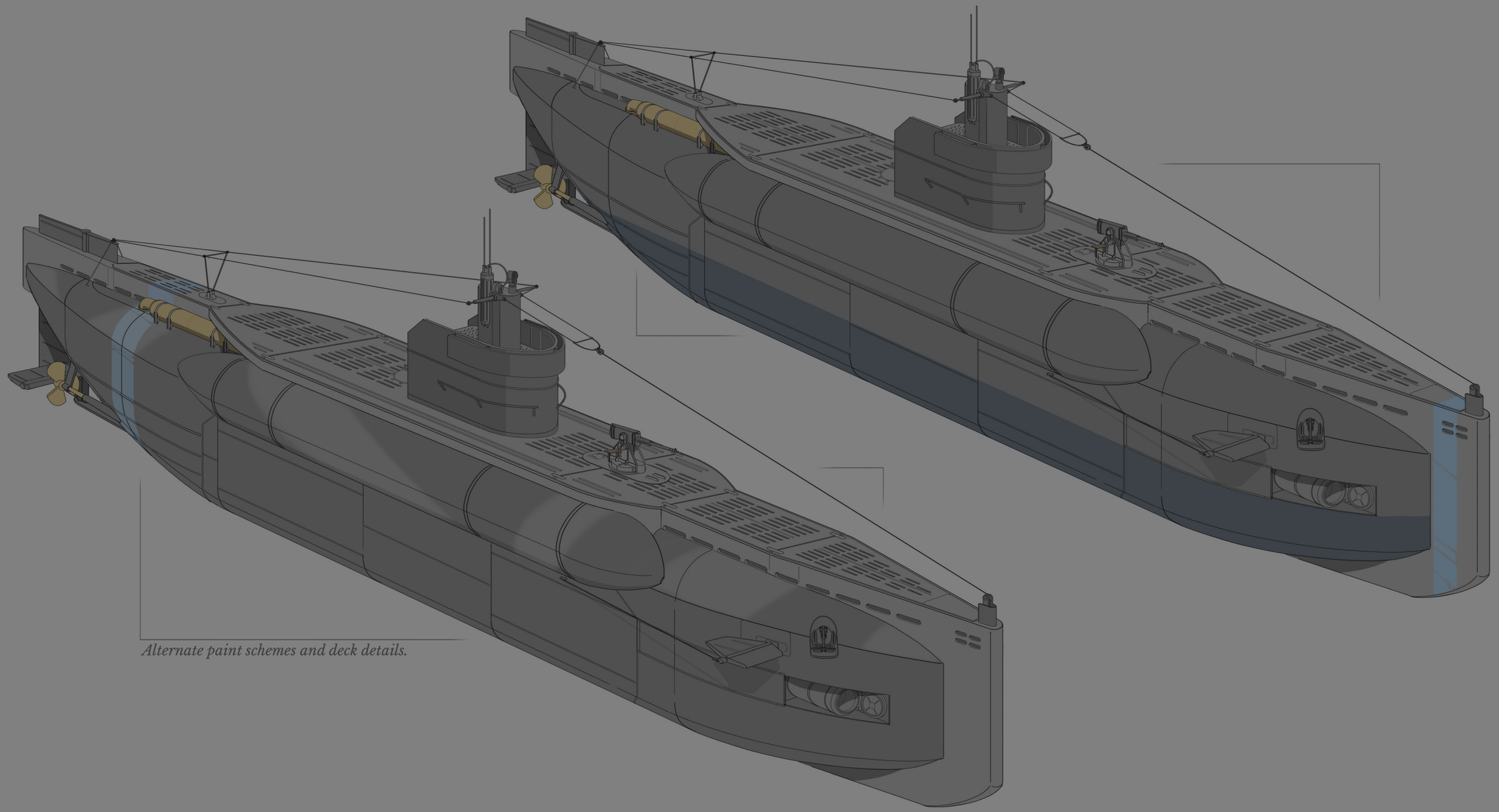

*Alternate paint schemes and deck details.*

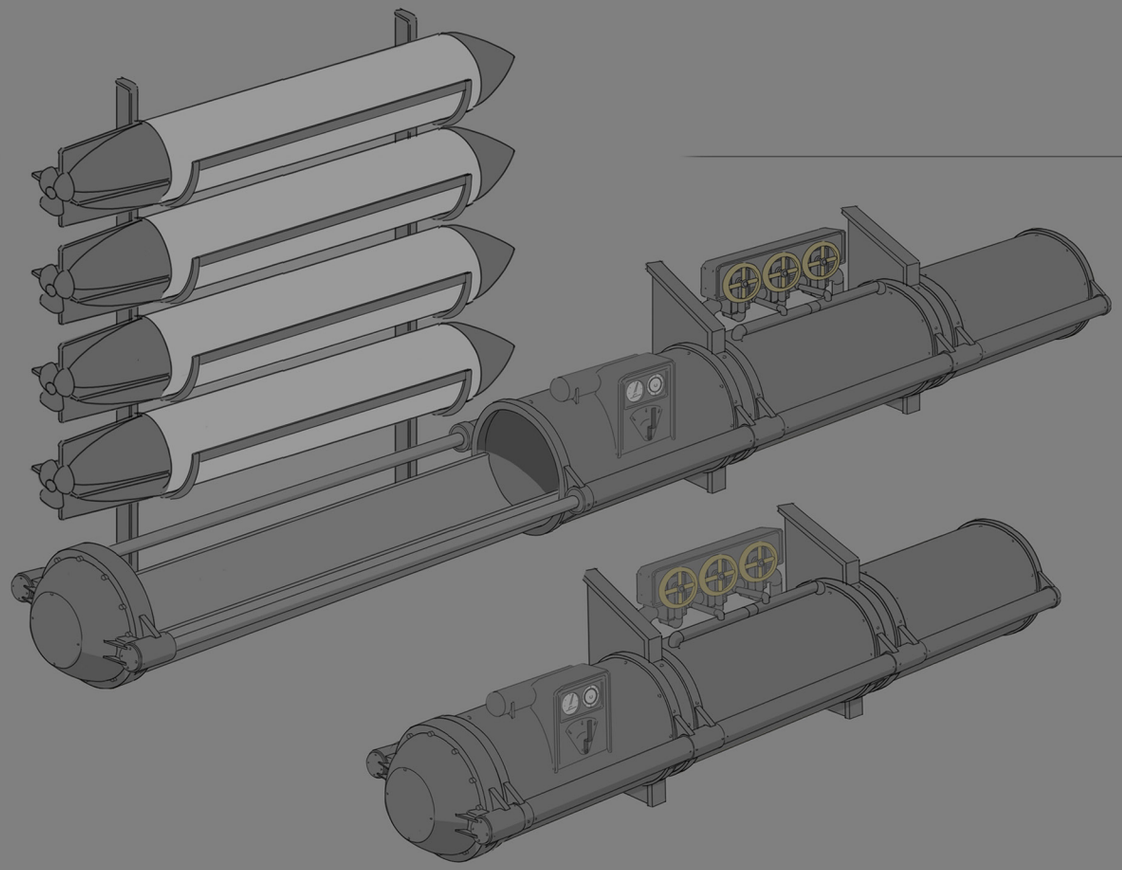

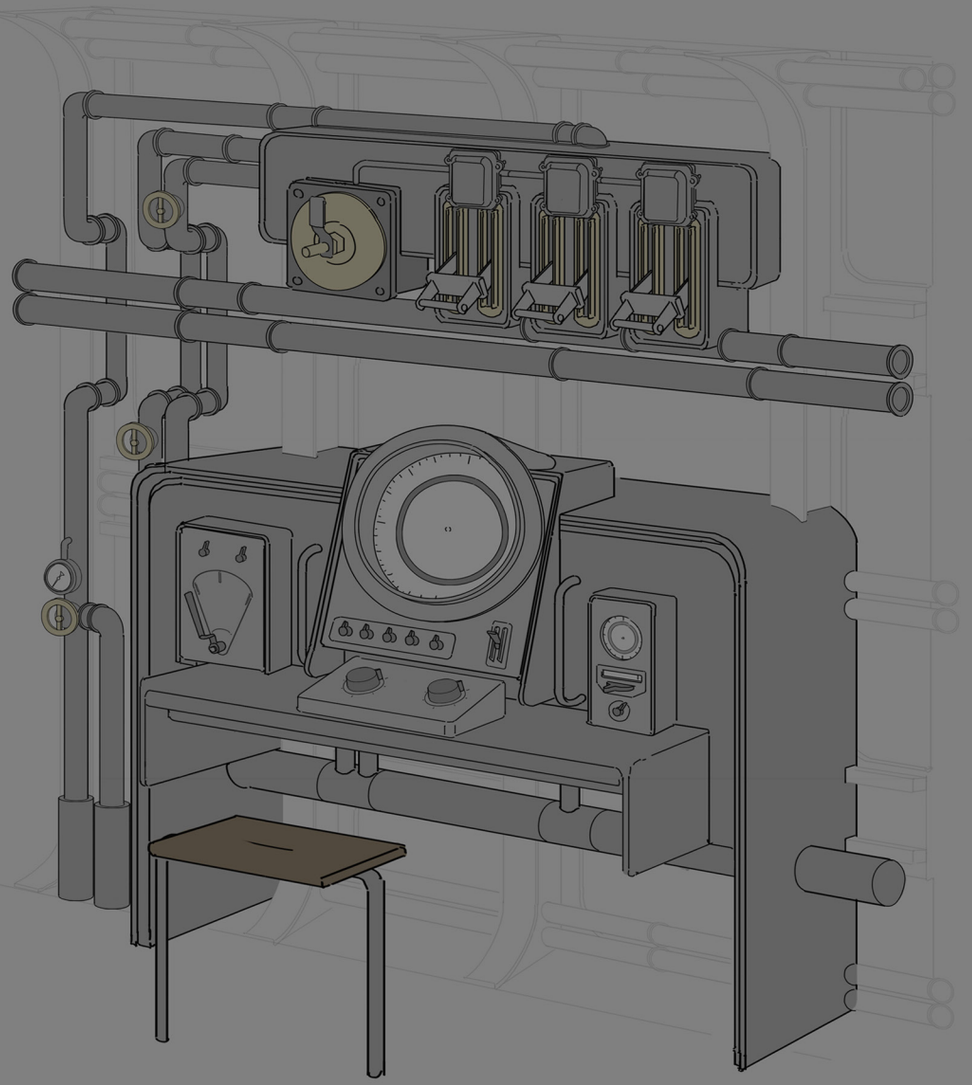

## Submarine Interior

The reason the boat interiors were handled by the modelers is due to the complexity of the submarine interiors. As we figured out what seats and functions were needed for the sub, a full set of detailed drawings were created to capture the complex feeling of a submarine. There would be little else to look at under the water, so we wanted the interior space to be visually interesting.

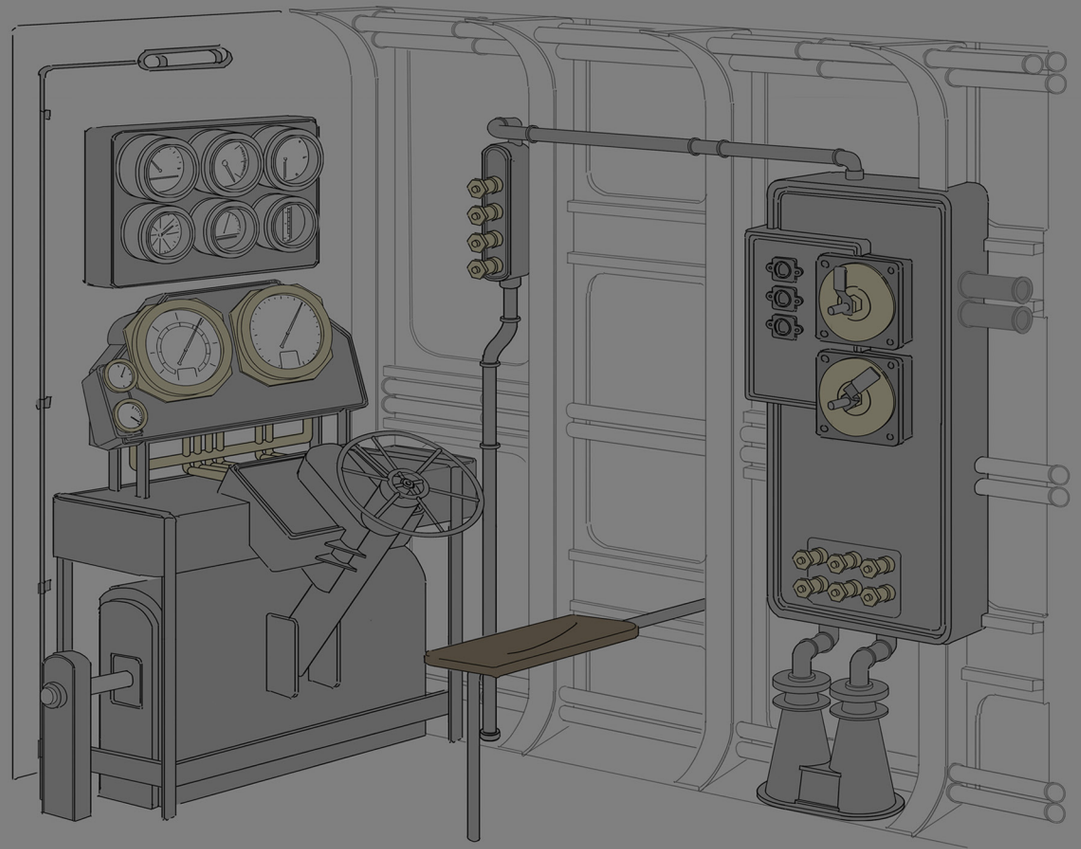

## Submarine Interior

As the gameplay and physics were being figured out by the programmer and game designer, the visuals took shape.

The task to design a bunch of odd industrial machinery that only needs to feel functional is always a fun one. - Julian

The player character requires a certain amount of space to move, so the submarine had to look more cramped than it actually was. The bulkhead doors developed for the boat helped a lot in things feeling claustrophobic.

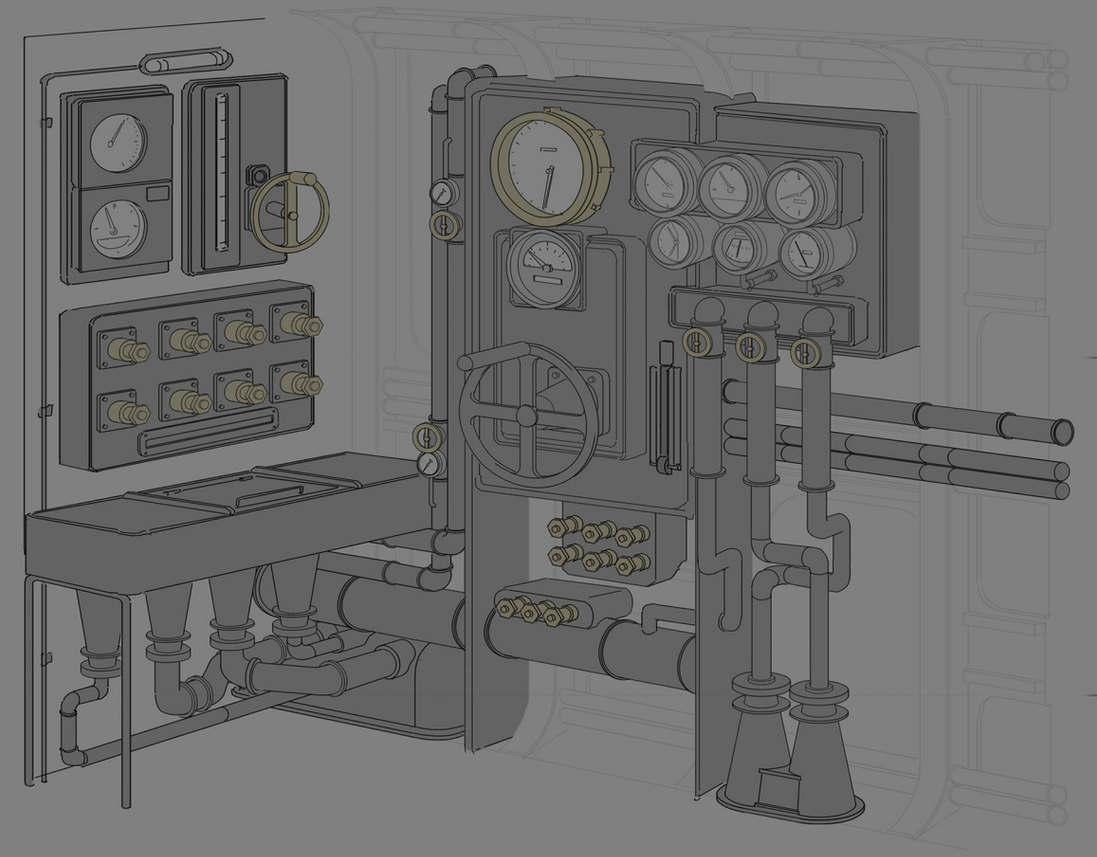

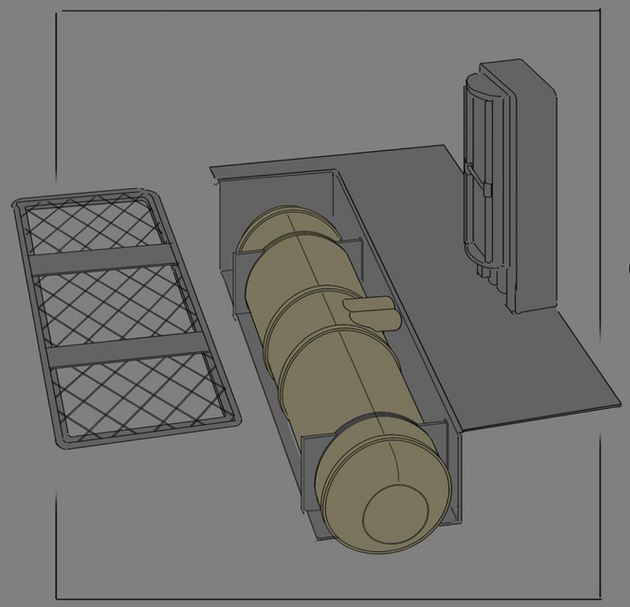

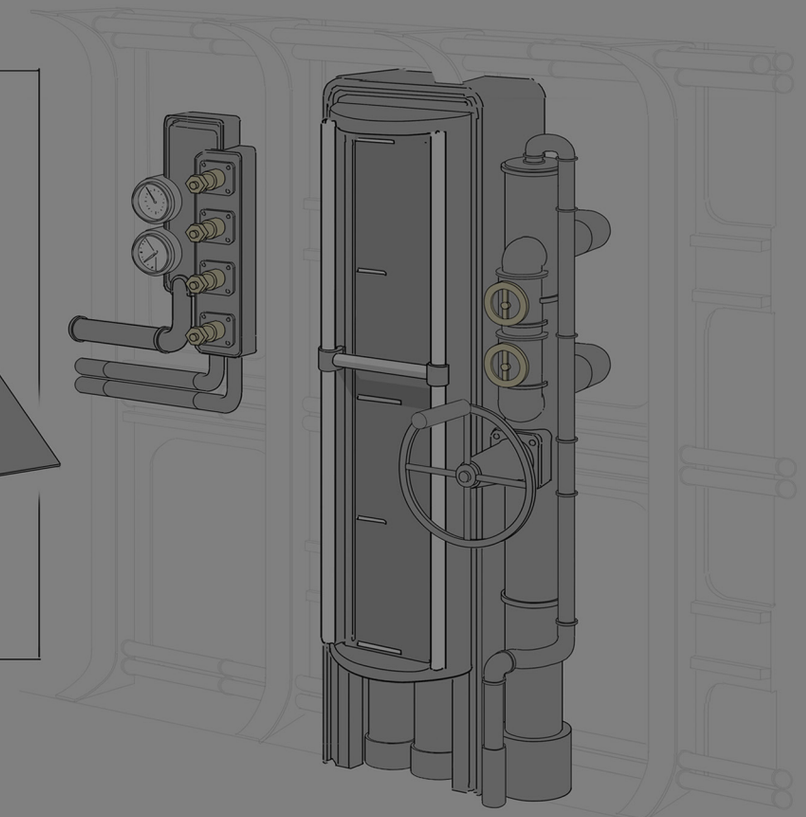

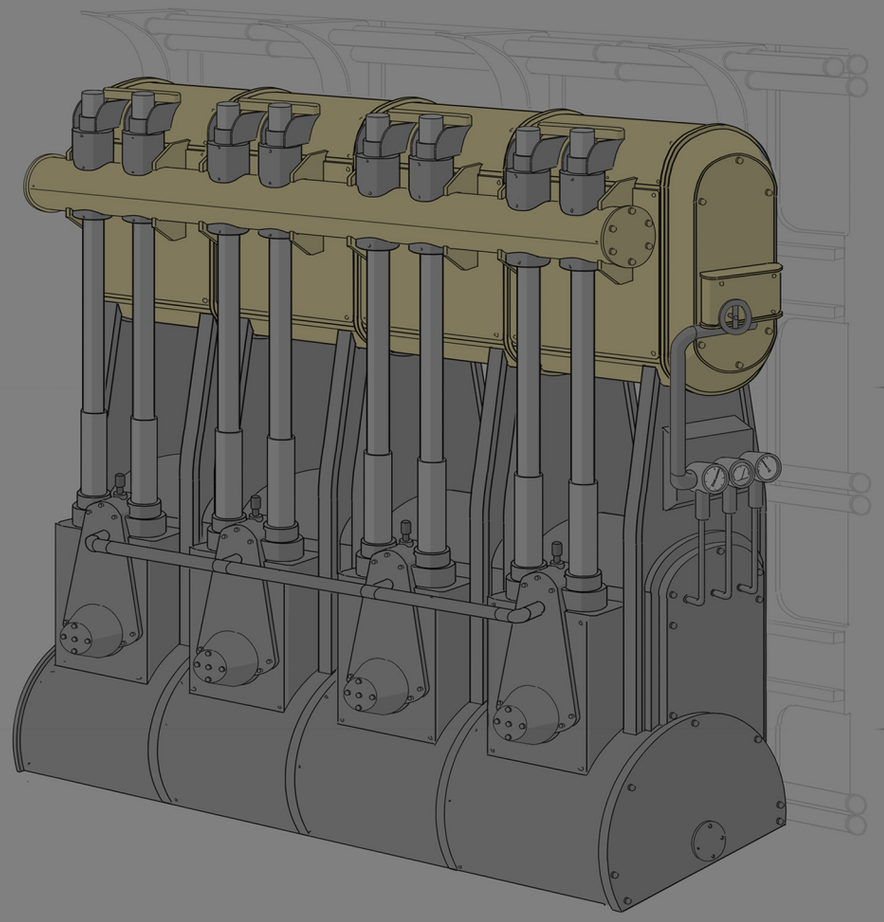

## Submarine Interior

The gameplay feature of ballasts required a visual gauge to be added. Unrealistic in size, and not in the correct location on a real submarine, it needed to provide some visual feedback for the ballast operator.

New engines were also needed, as the ones designed for boats didn't fit into the walls of the submarine while also leaving enough room for players.

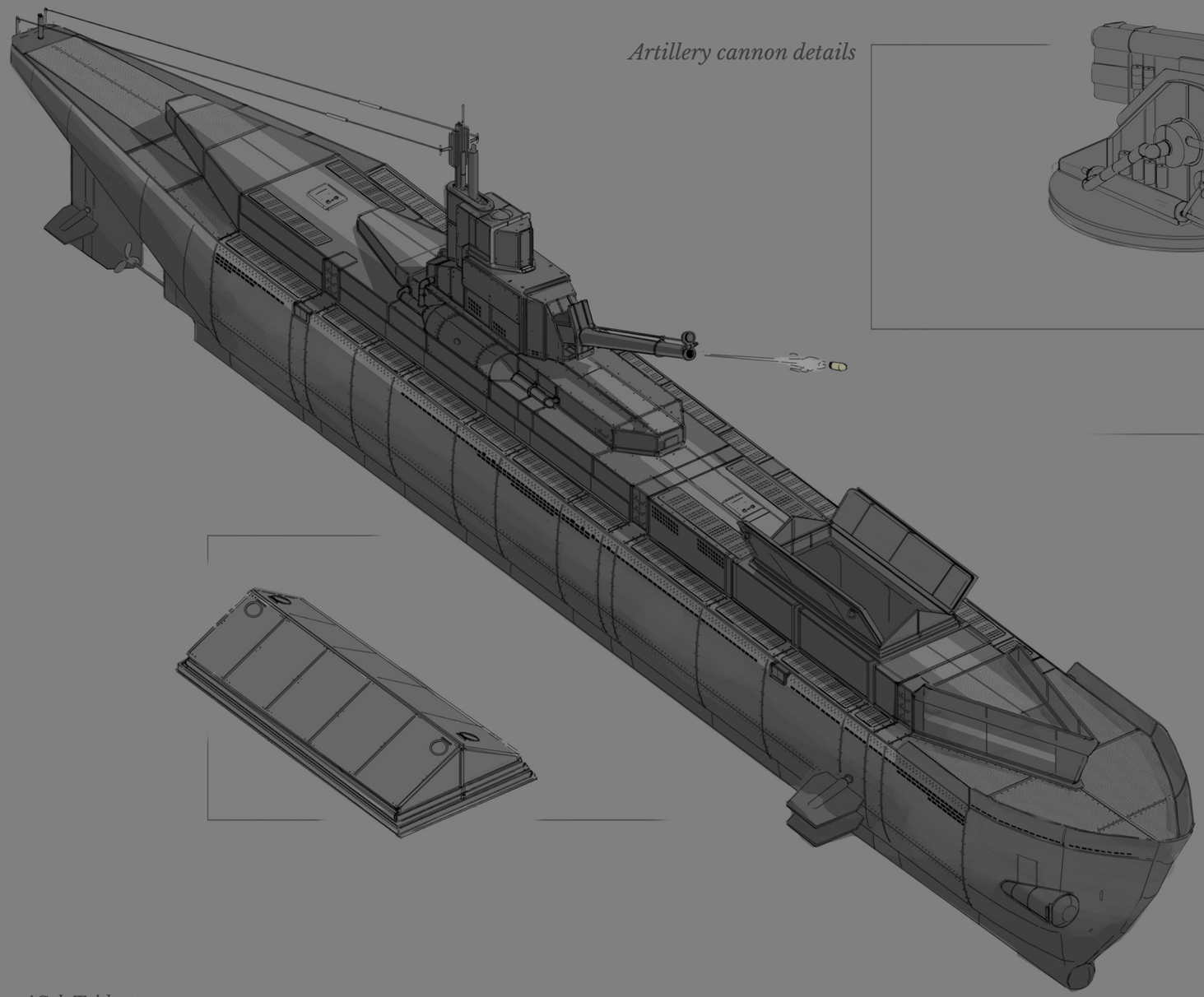

*AC-b Trident*

*Artillery cannon details*

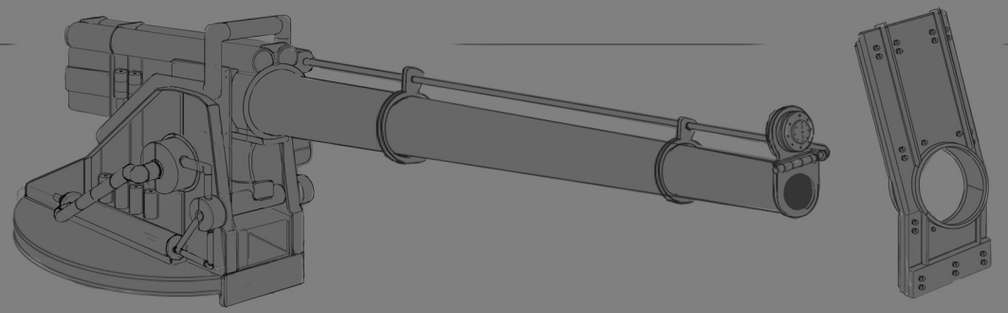

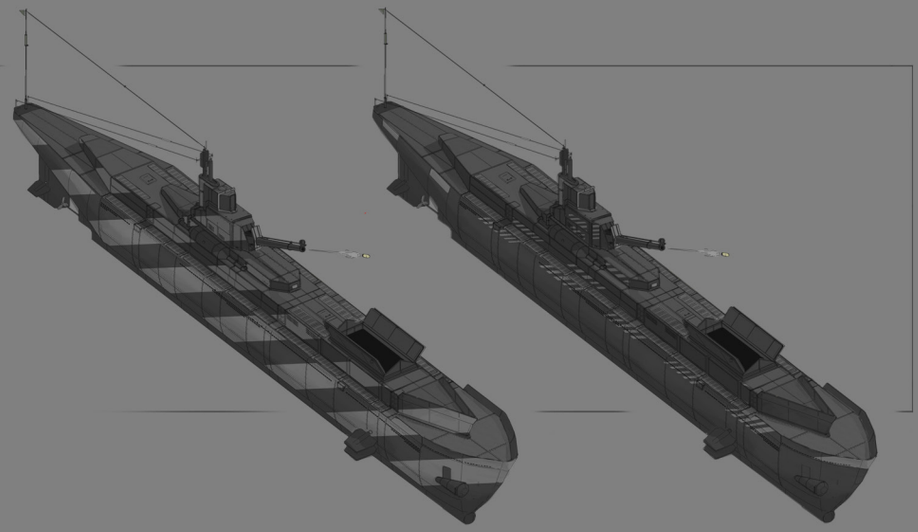

## Colonial Submarine

For the Colonial submarine, the game designers wanted a clear alternate role. The idea to add an artillery cannon on top, and allow it to crane in ammo made the sub an imposing size. The feel of the two faction submarines was established.

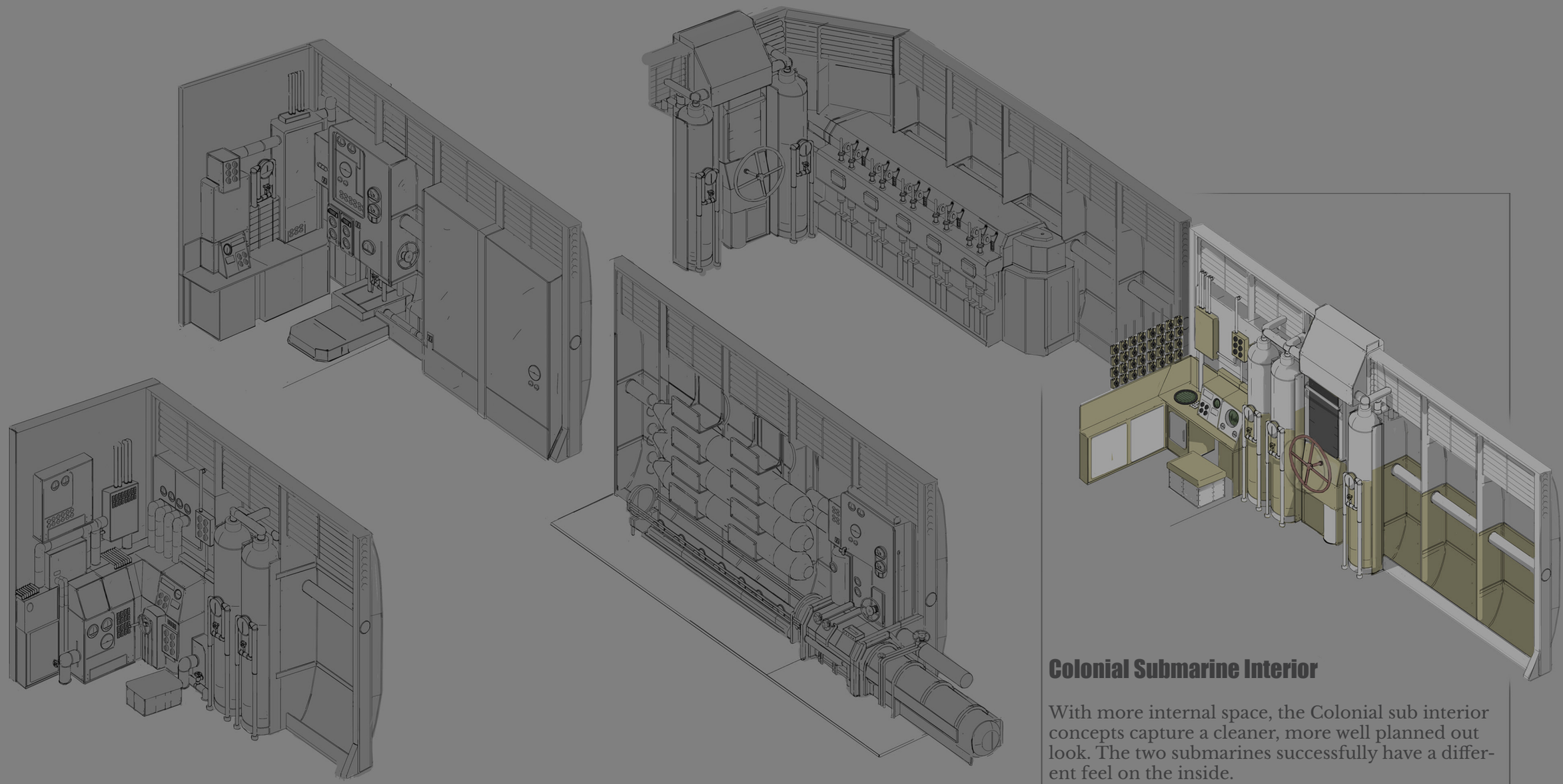

## Colonial Submarine Interior

With more internal space, the Colonial sub interior concepts capture a cleaner, more well planned out look. The two submarines successfully have a different feel on the inside.

*Bellweather by VAC*

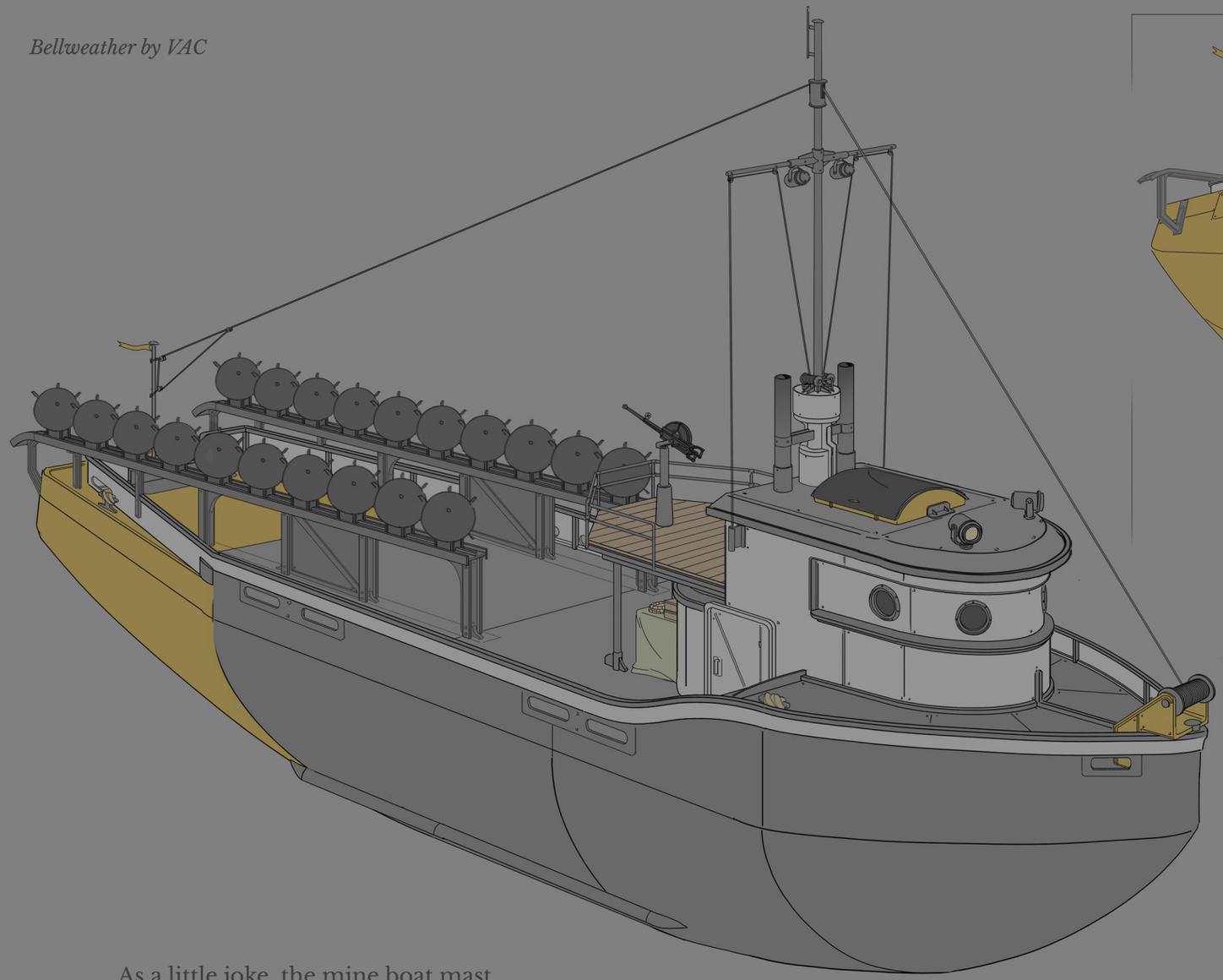

As a little joke, the mine boat mast cabling makes an M shape. - Julian

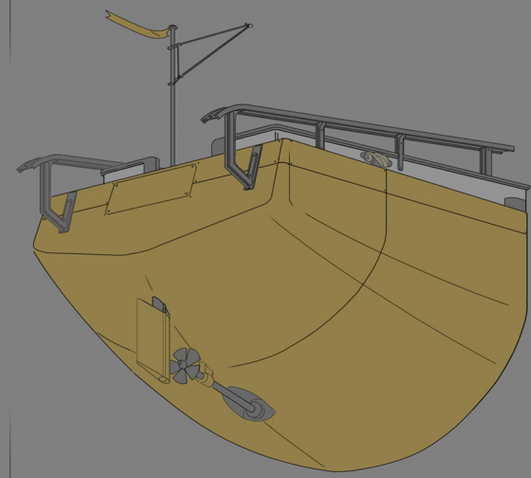

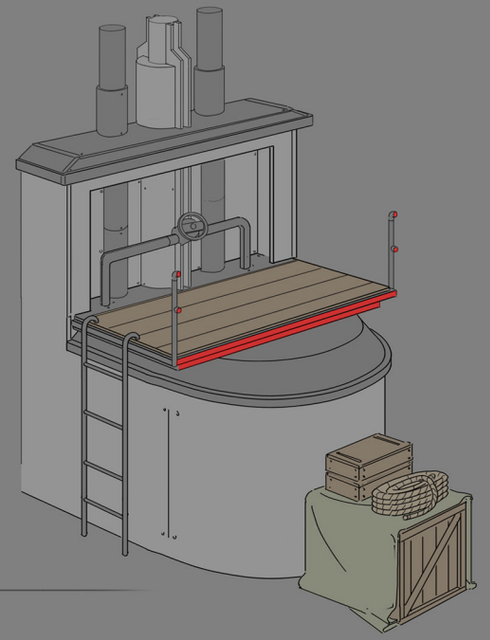

## Mine Boat

We have always been aware that real sea mines are very large, and that the fact the player character carried one over their shoulder was silly. Multiple people on the team had wanted a proper mine laying boat for the game for a while. Everyone was happy when game design had a chance to update how mines function, so we had the excuse to make the boat. The choice to make it faction neutral was easy. With the established look of the large logi ships in game, the visuals of a little tugboat were also simple to nail down.

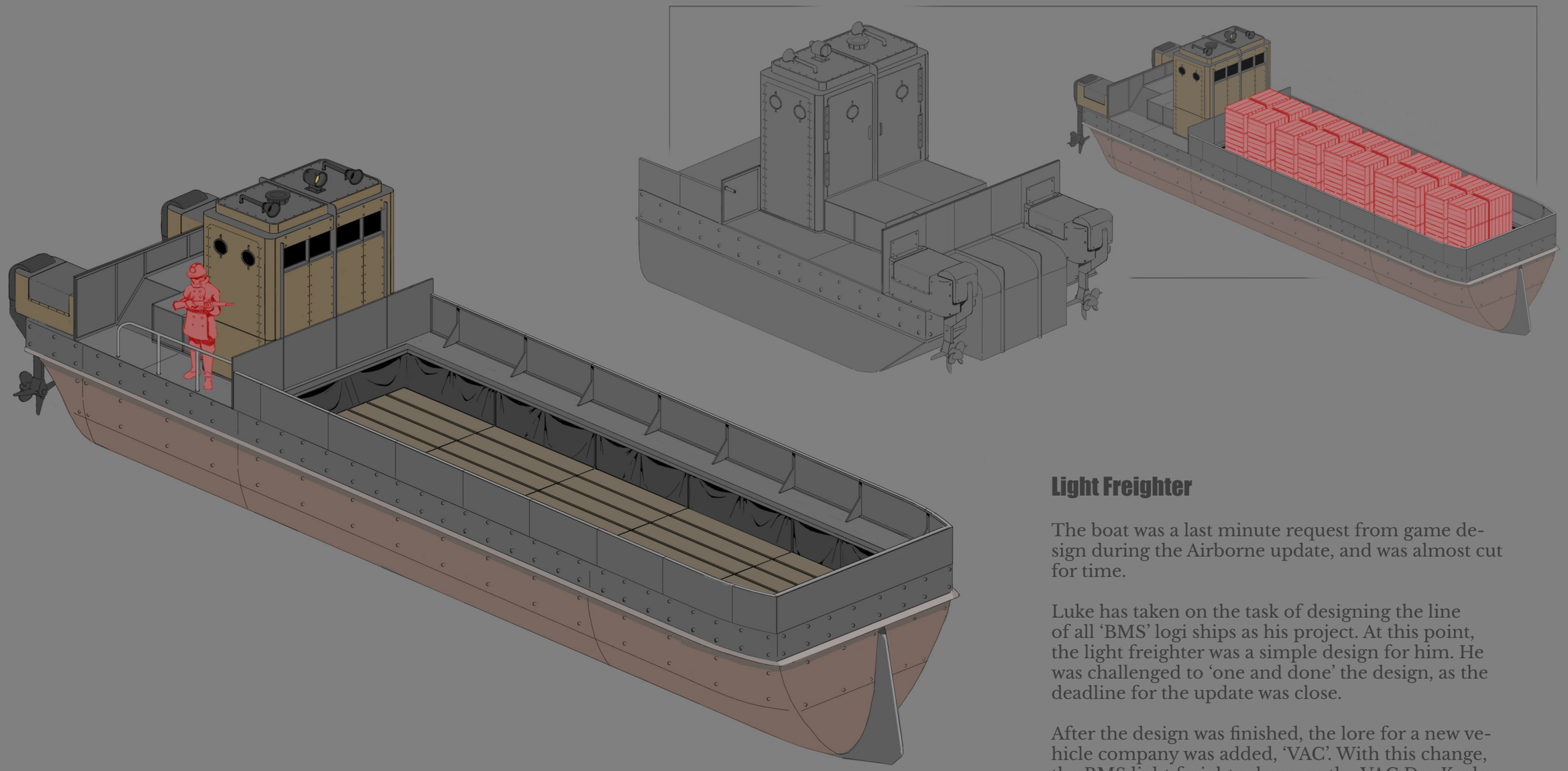

*Das Krokodil by VAC*

## Light Freighter

The boat was a last minute request from game design during the Airborne update, and was almost cut for time.

Luke has taken on the task of designing the line of all 'BMS' logi ships as his project. At this point, the light freighter was a simple design for him. He was challenged to 'one and done' the design, as the deadline for the update was close.

After the design was finished, the lore for a new vehicle company was added, 'VAC'. With this change, the BMS light freighter became the VAC Das Krokodil.

## Resource ship

Another clean design. At this point in development, what is needed to make a large ship is fully fleshed out. While still a lot of work to model, the concept artists have a clear idea what is needed.

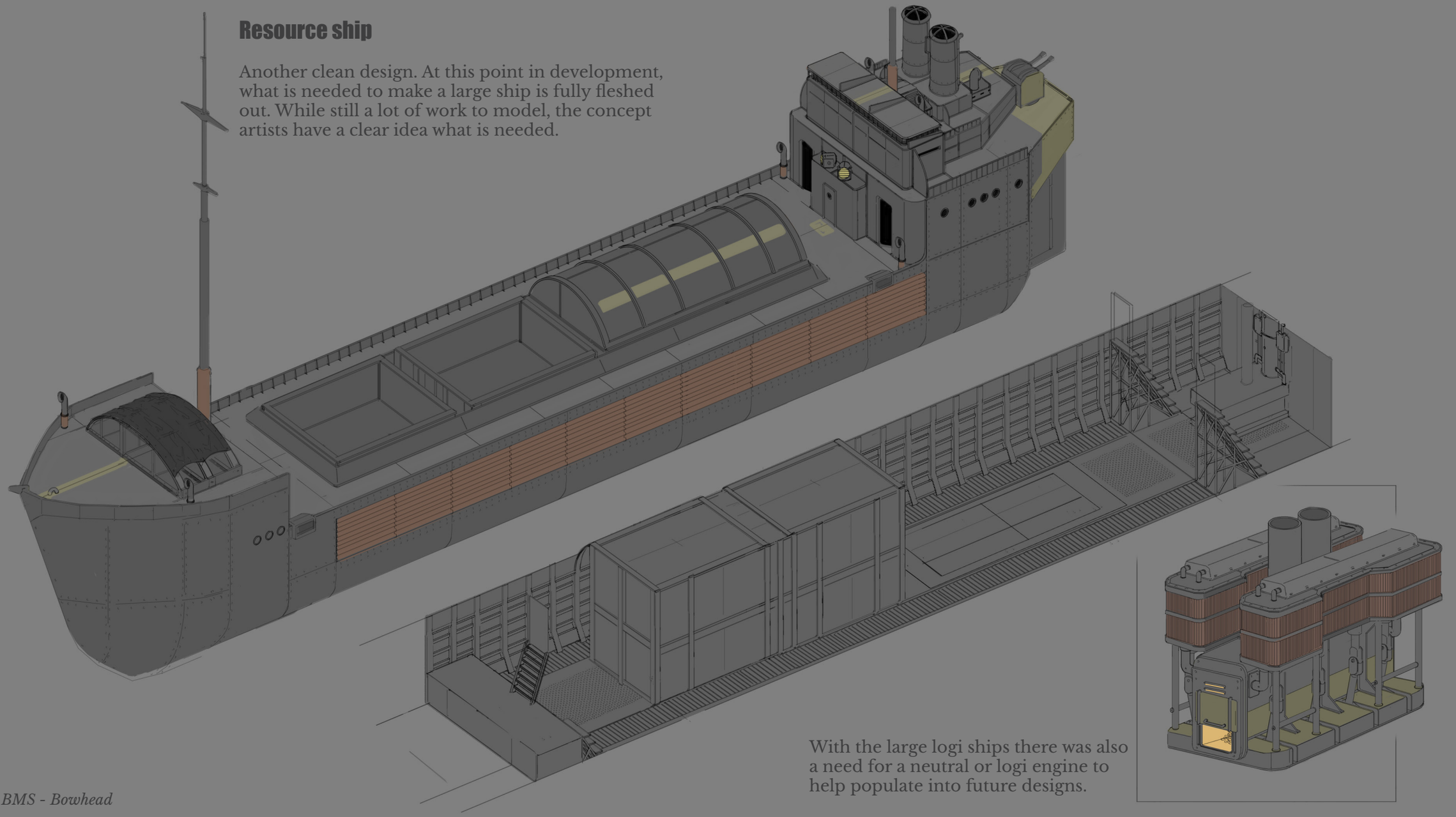

*BMS - Bowhead*

With the large logi ships there was also a need for a neutral or logi engine to help populate into future designs.

## Storage ship

The storage ship was a hard design; there was a need for it to be a mobile stock pile, withdrawal point and crane. It also needed the ability to deploy a large ramp with custom animations. The front needed to be opened while in the water without sinking, but also at the same time take hits and face the threat of leaks sinking the ship. A few block-in models were built to test out the different elements, and concept artists brought it all together. Then when we thought we had it all correct, the crane needed to be moved on the final model.

The development for the BMS-Bluefin was long, but once all the animation and lights were turned on, the boat became something greater than the sum of its parts.

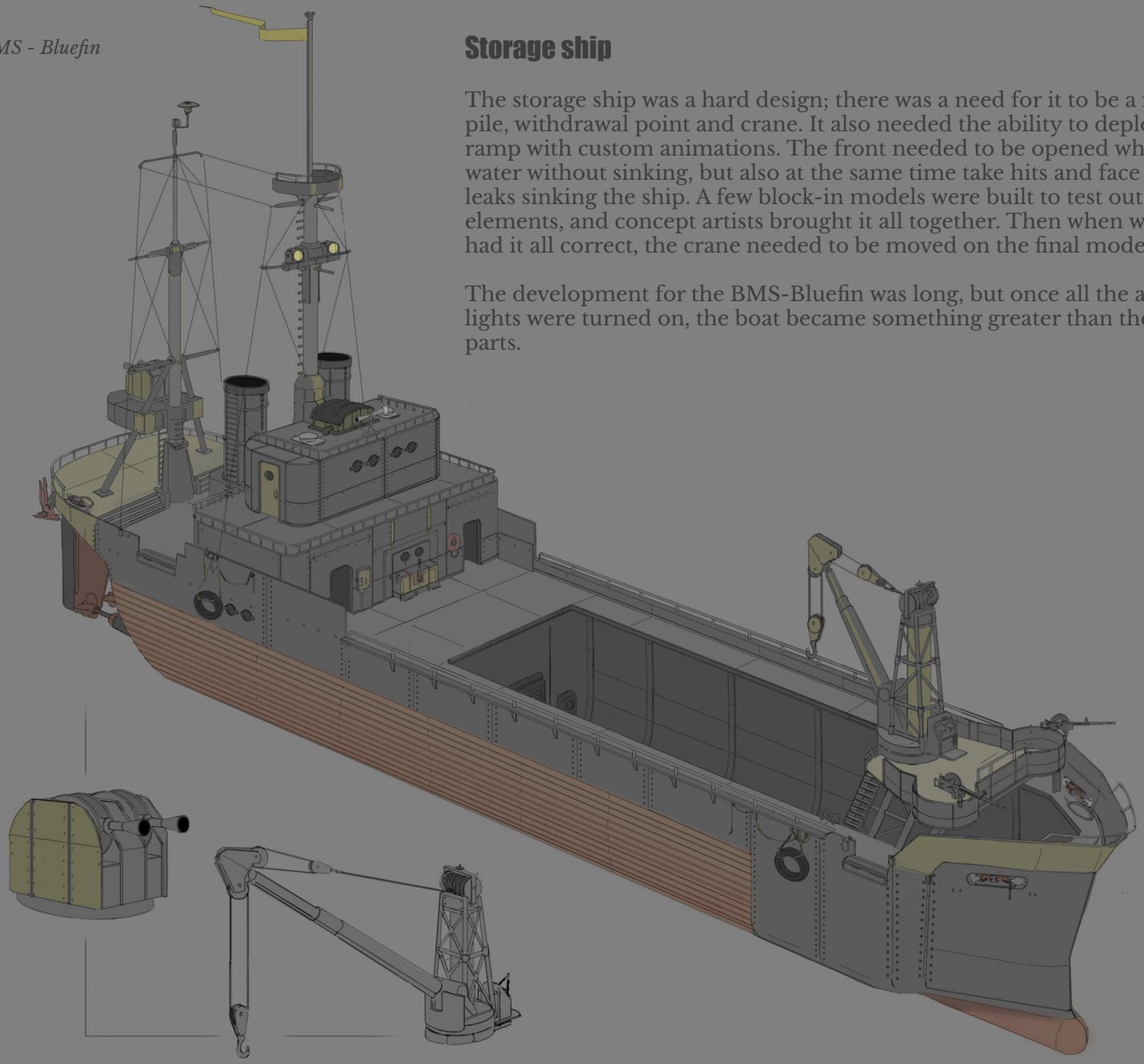

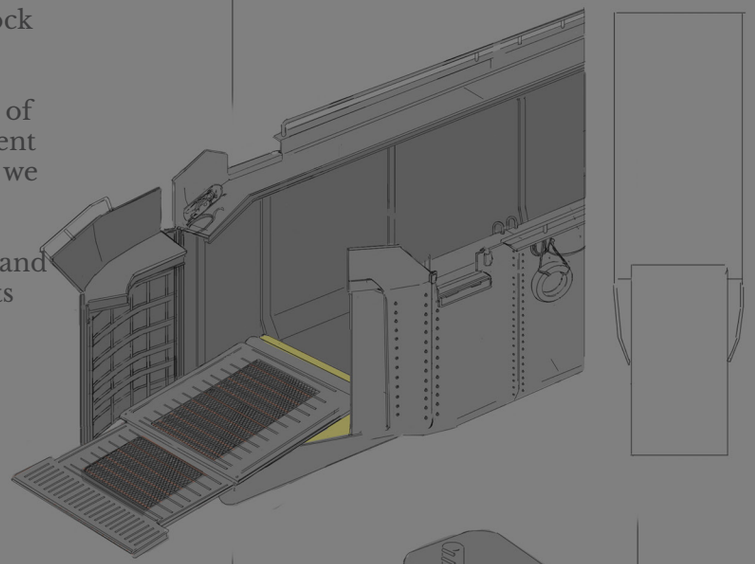

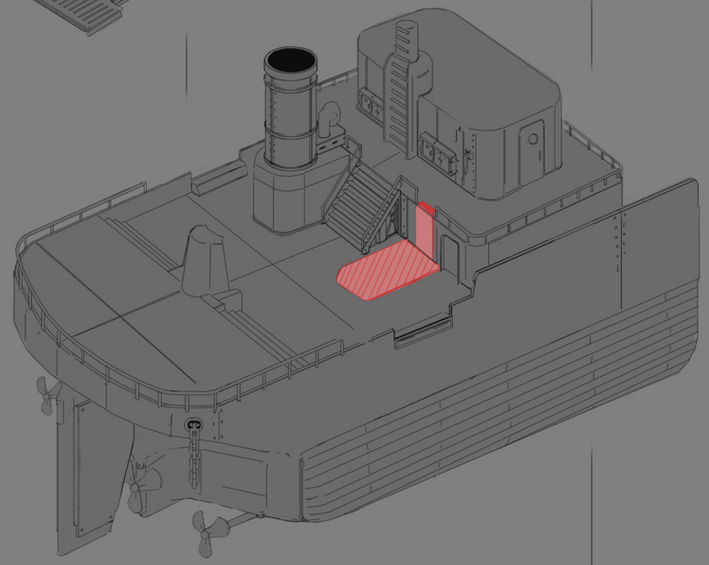

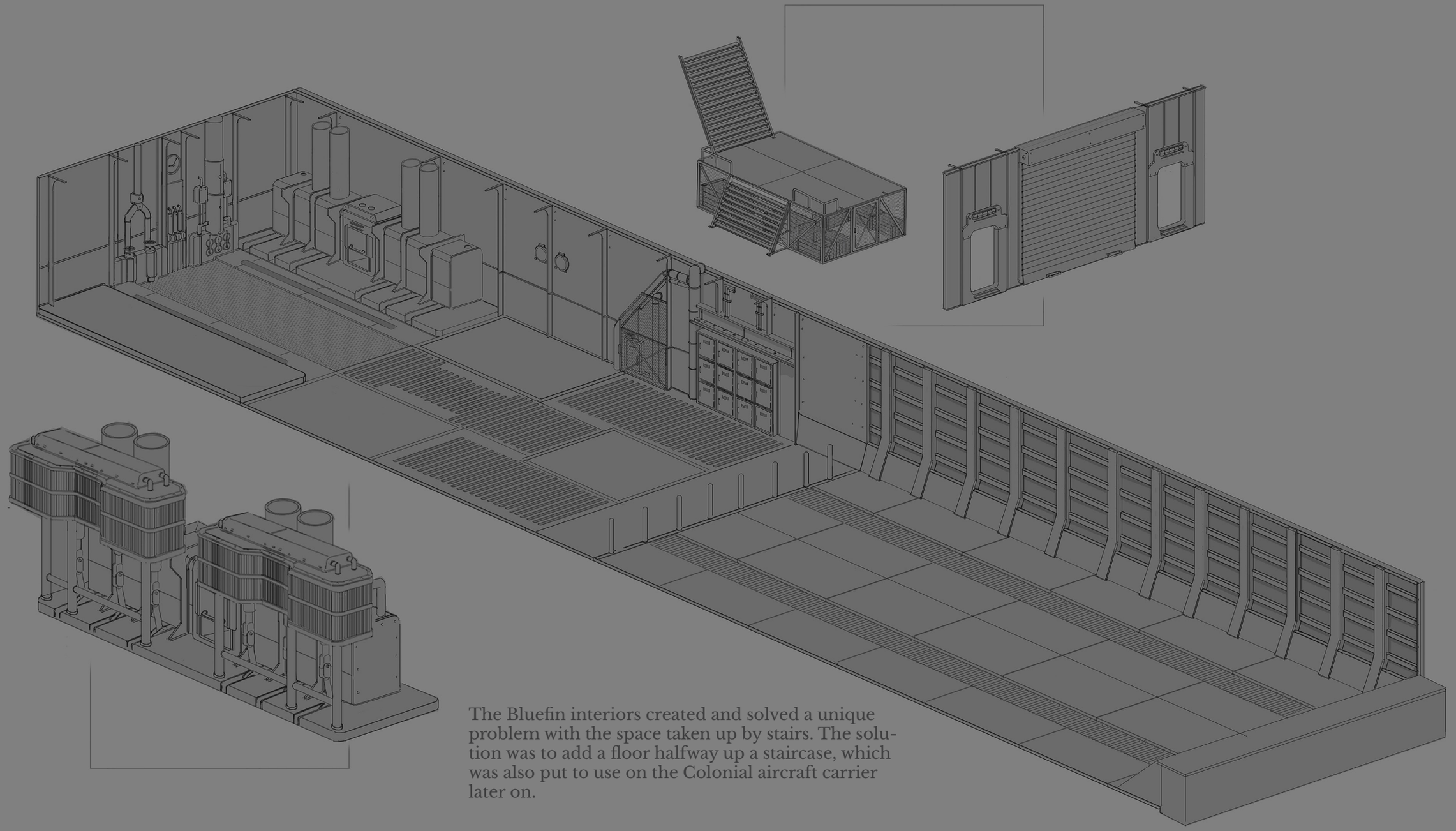

The Bluefin interiors created and solved a unique problem with the space taken up by stairs. The solution was to add a floor halfway up a staircase, which was also put to use on the Colonial aircraft carrier later on.

*BMS - Longhook*

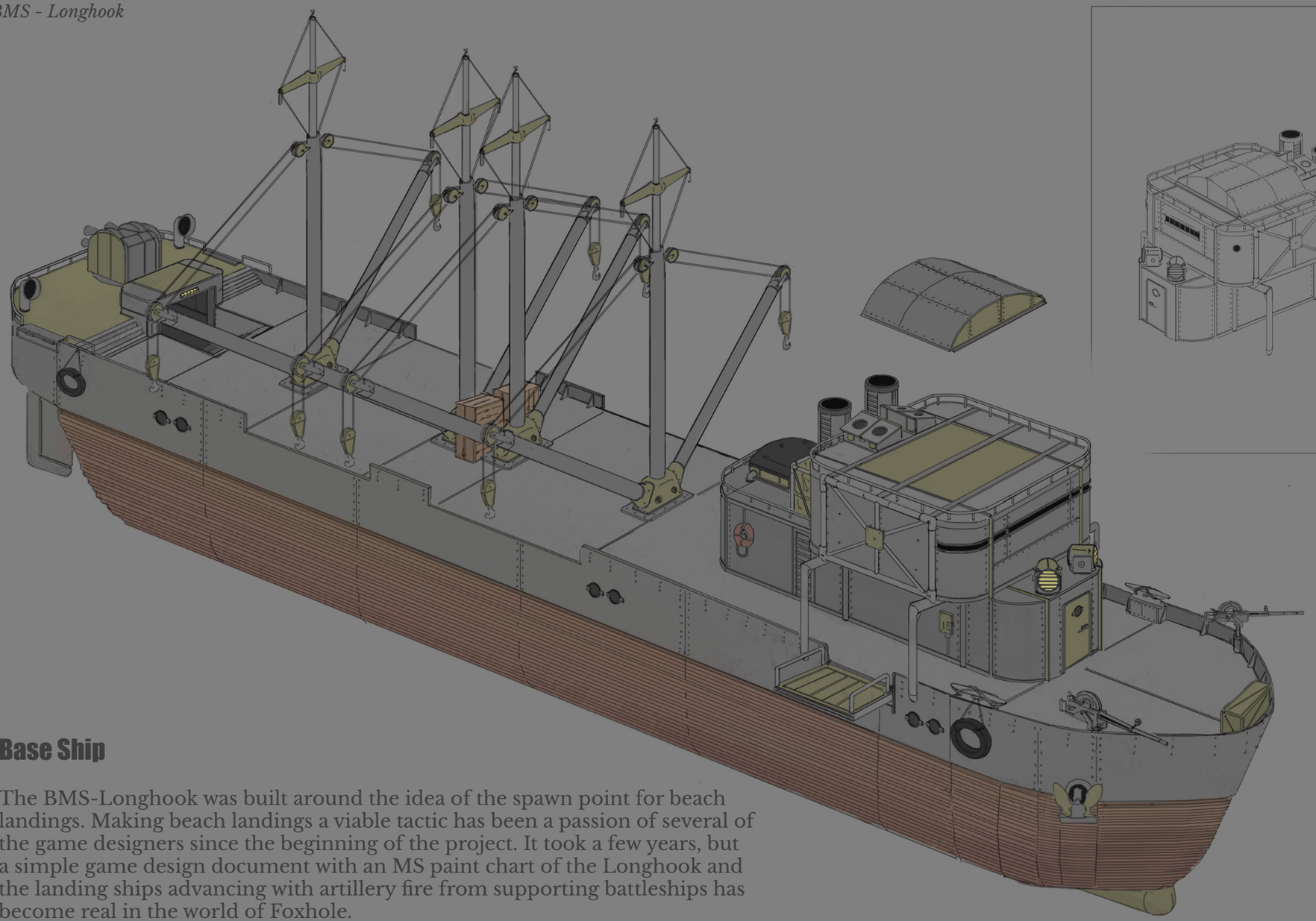

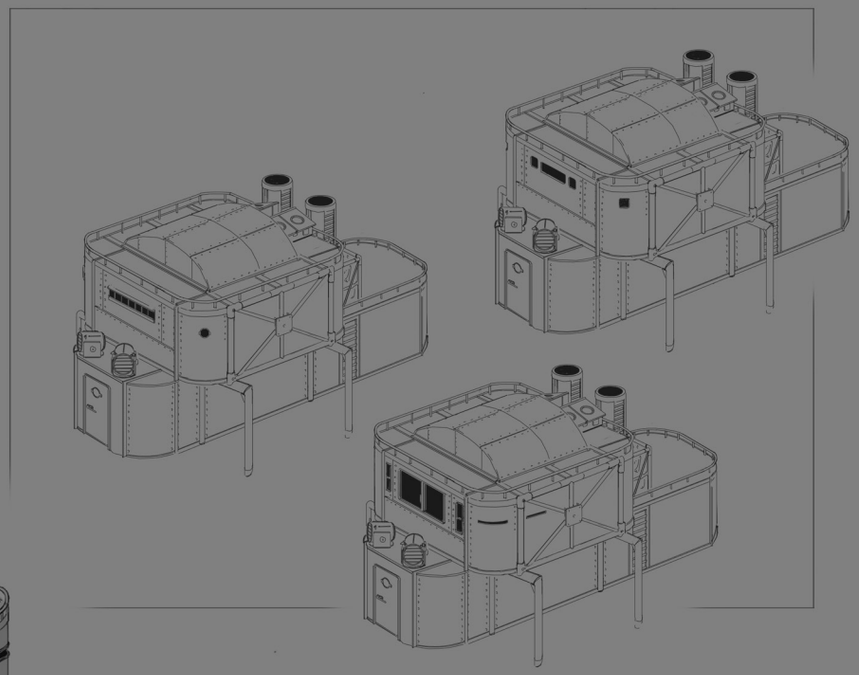

This boat was the first to have a ‘logi machine gun’, marking the first time a factionless machine gun has been added to the game. A distinct, over-the-top curved magazine was designed, and has been used across a few logi vehicles since.

## Base Ship

The BMS-Longhook was built around the idea of the spawn point for beach landings. Making beach landings a viable tactic has been a passion of several of the game designers since the beginning of the project. It took a few years, but a simple game design document with an MS paint chart of the Longhook and the landing ships advancing with artillery fire from supporting battleships has become real in the world of Foxhole.

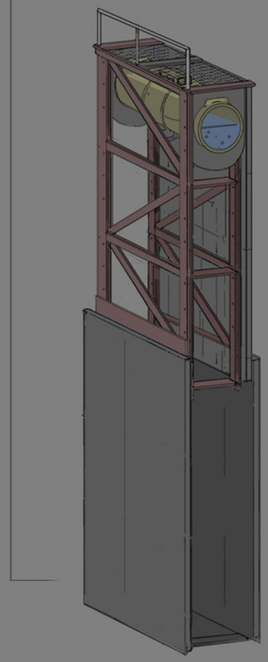

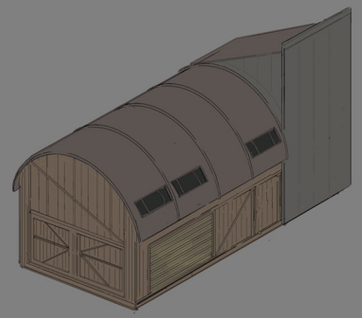

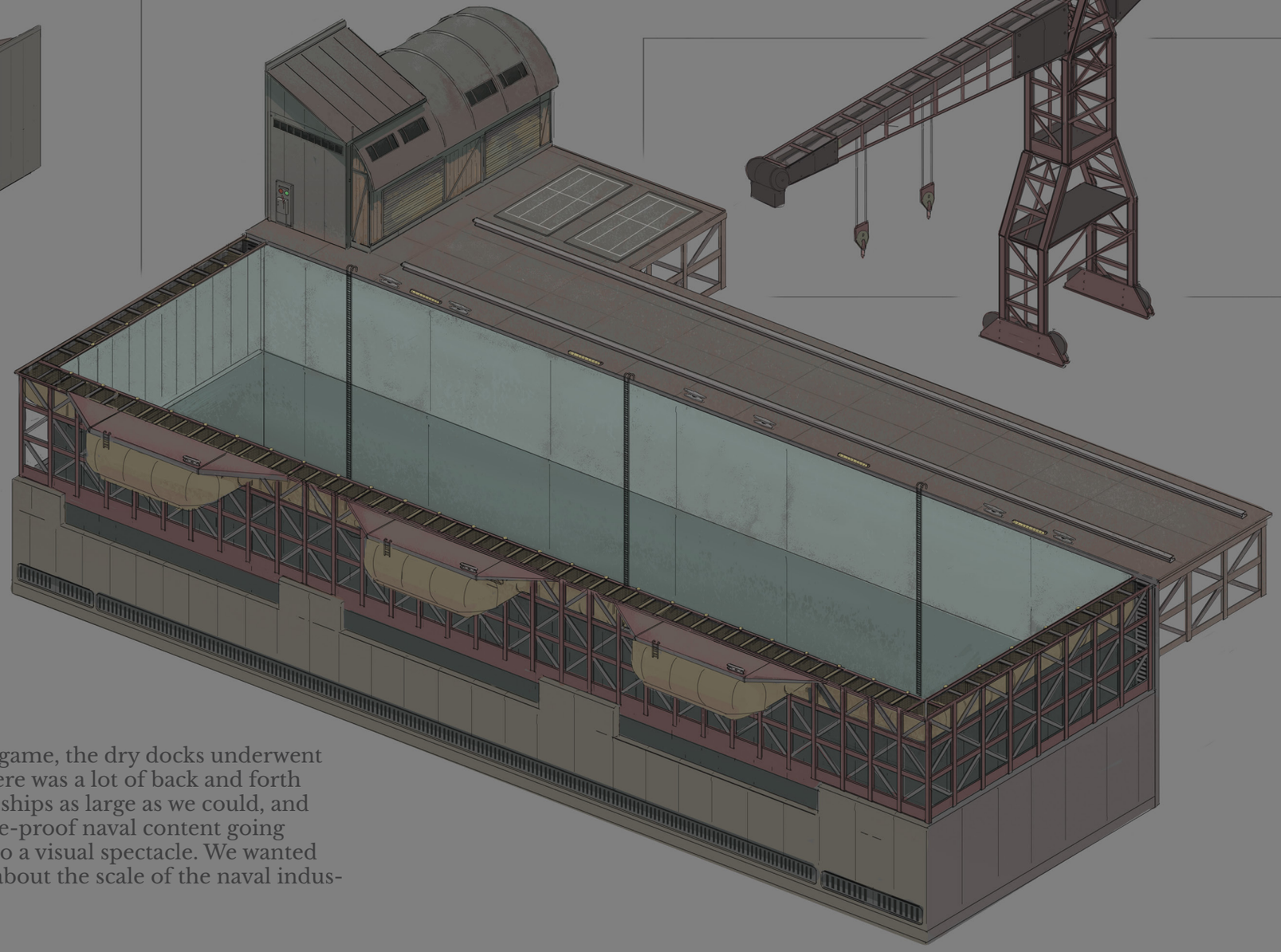

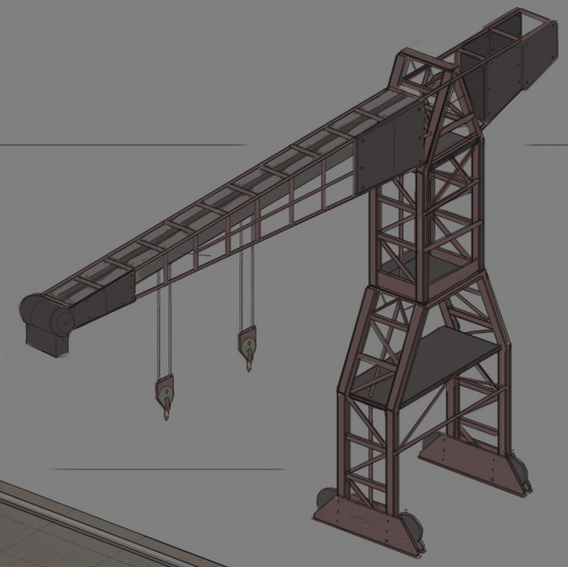

## Dry Dock

By far the largest player built structure in the game, the dry docks underwent heavy scrutiny during their development. There was a lot of back and forth during the Naval Warfare update to make the ships as large as we could, and make the drydocks as big as we could to future-proof naval content going forward. The building in operation turned into a visual spectacle. We wanted players who built them to feel accomplished about the scale of the naval industry they created.

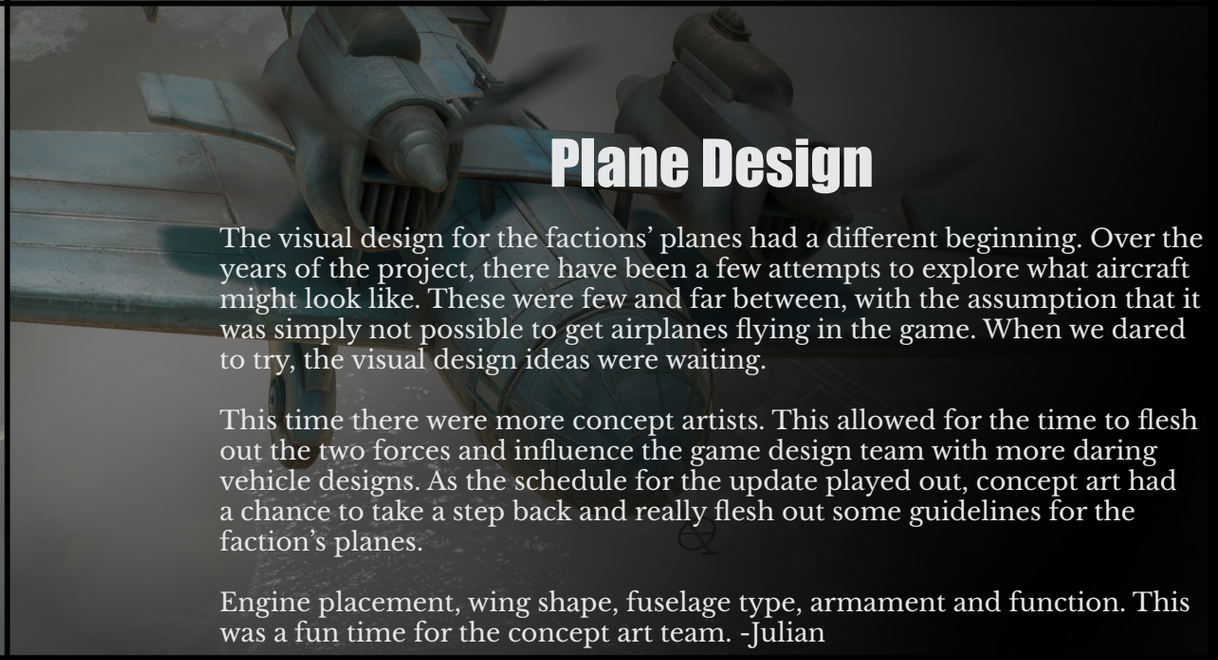

# Plane Design

The visual design for the factions' planes had a different beginning. Over the years of the project, there have been a few attempts to explore what aircraft might look like. These were few and far between, with the assumption that it was simply not possible to get airplanes flying in the game. When we dared to try, the visual design ideas were waiting.

This time there were more concept artists. This allowed for the time to flesh out the two forces and influence the game design team with more daring vehicle designs. As the schedule for the update played out, concept art had a chance to take a step back and really flesh out some guidelines for the faction's planes.

Engine placement, wing shape, fuselage type, armament and function. This was a fun time for the concept art team. -Julian

## Early Airplane concepts.

There have been a few ideas about air warfare in the history of Foxhole. One idea I have always remembered came from the very first weeks I started at the company. Back at the very beginning of the project, before the game even had tanks, there was an idea that the wars had gone on for so long that there simply were no airplanes left. We didn't keep the idea, but it was evocative.

In 2019 there was a plan to make a set of crashed plane props to add around the world. A few in-game paint overs were developed to test the idea. You can see some themes like sea planes or paint schemes that would return later. We only had time to develop one, and only ever had it planned as set dressing, but it caused much speculation by players when it was placed in the home regions.

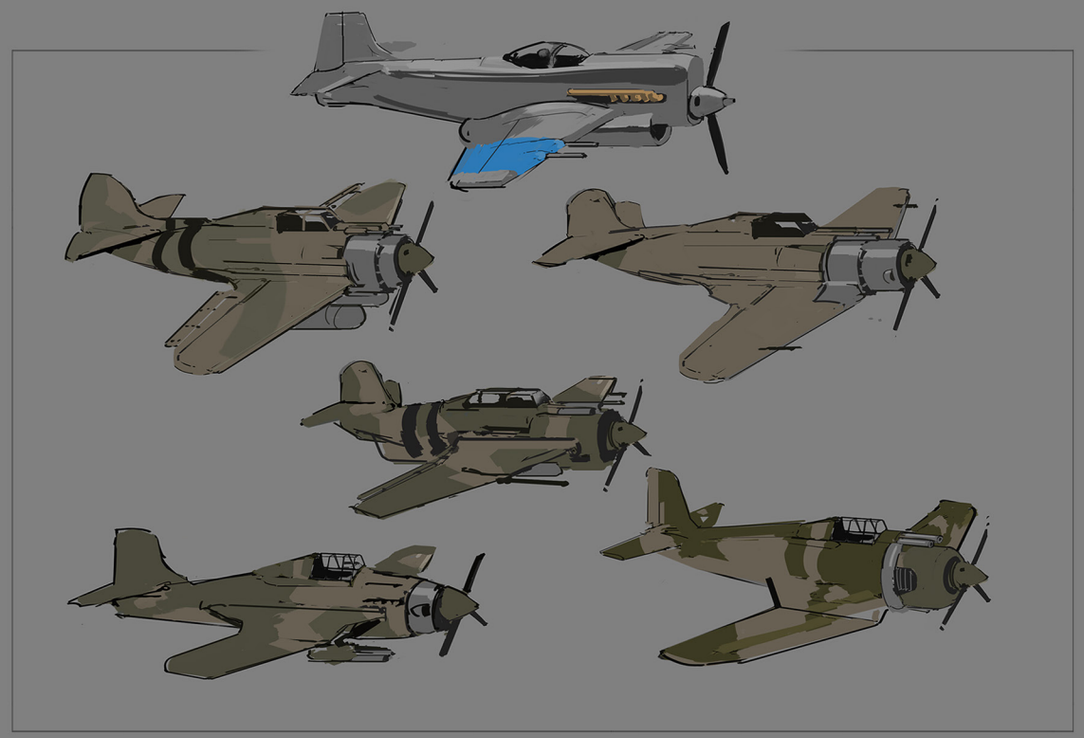

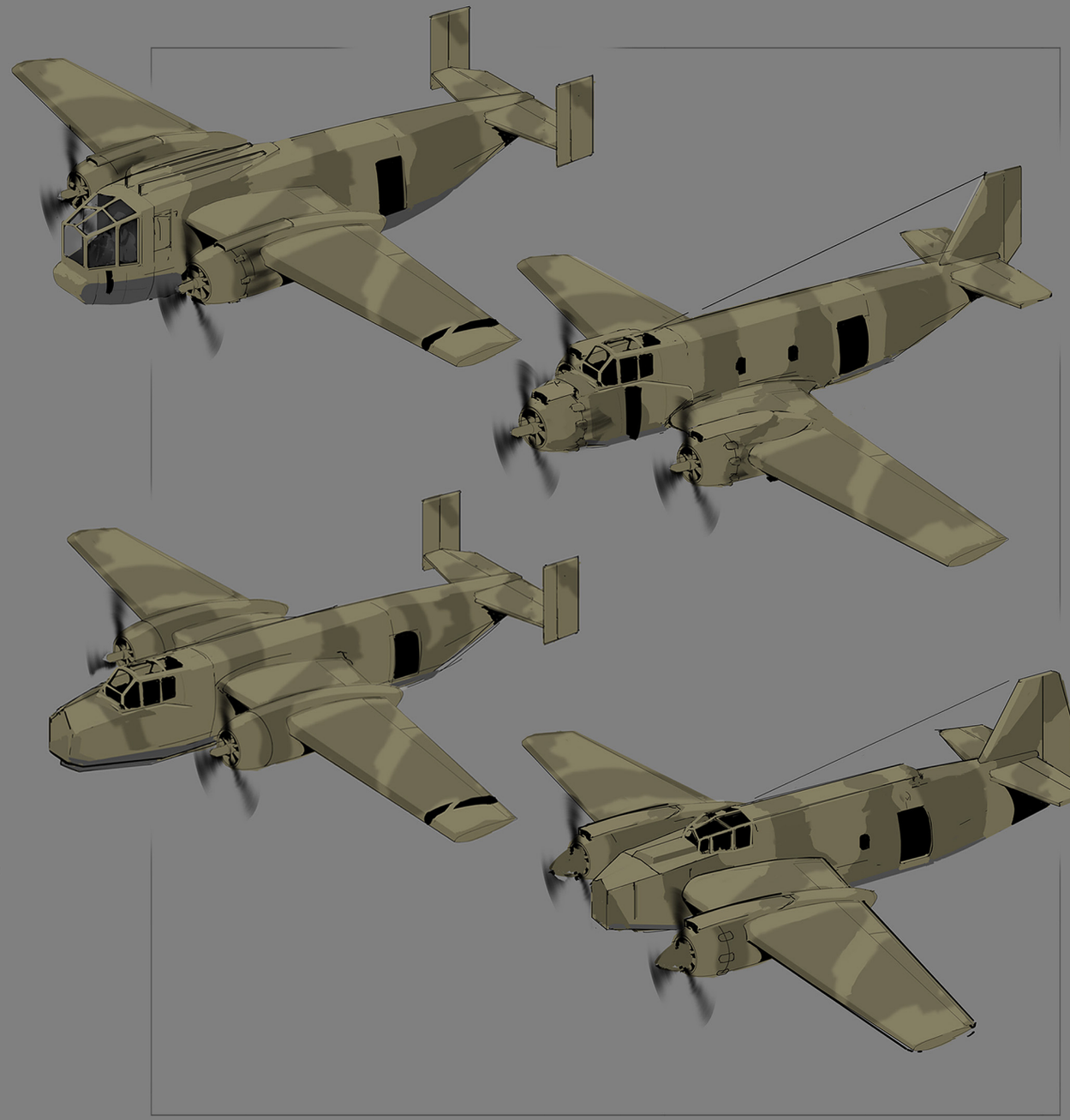

## Early Airplane concepts.

These were created as part of the 2019 exploration for destroyed plane assets. We did not think planes were possible, but we wanted to hint at a larger world, as though battles in the sky had occurred at some unspecified time. You can see some visual thoughts developing that we brought back for Airborne.

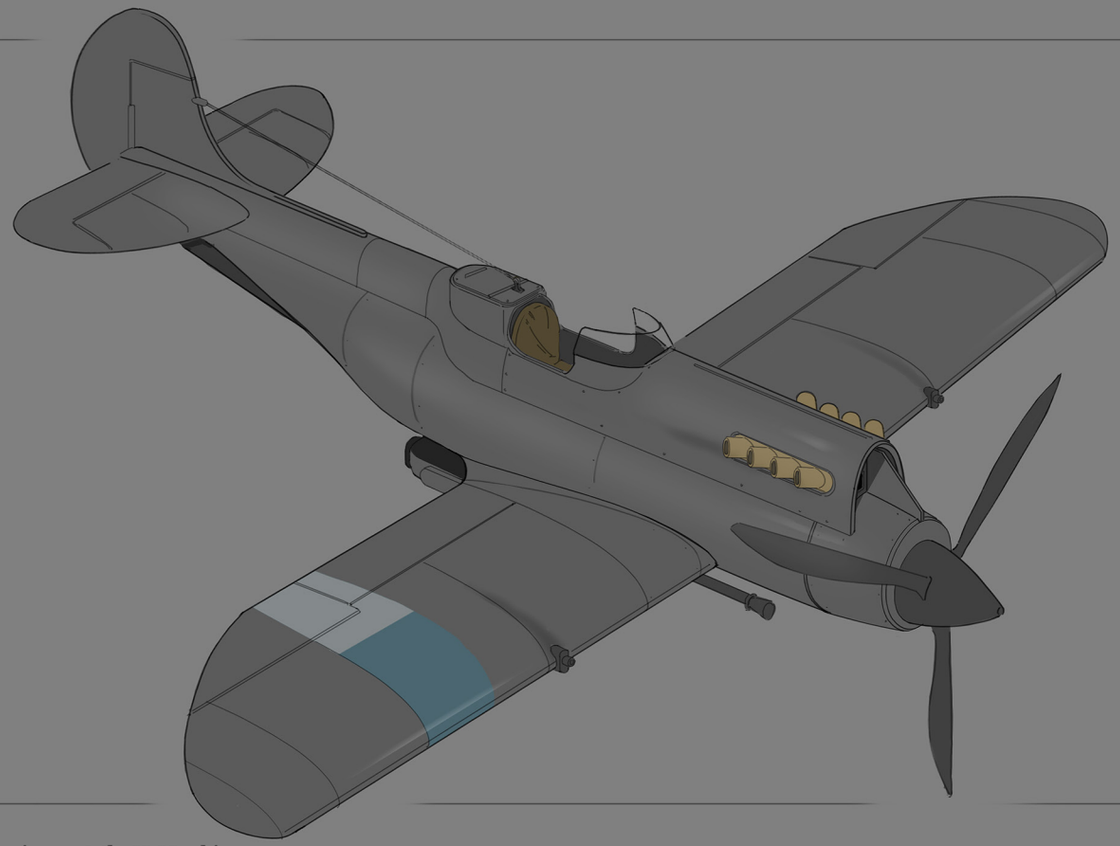

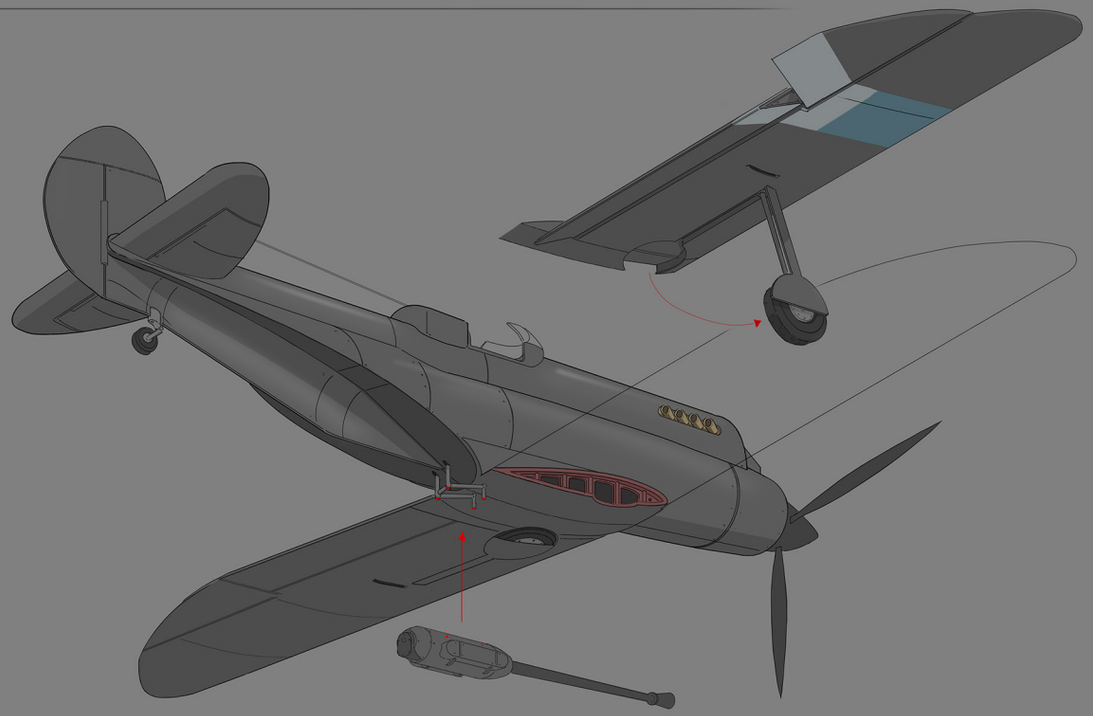

*Luminary Mk. II Harbinger*

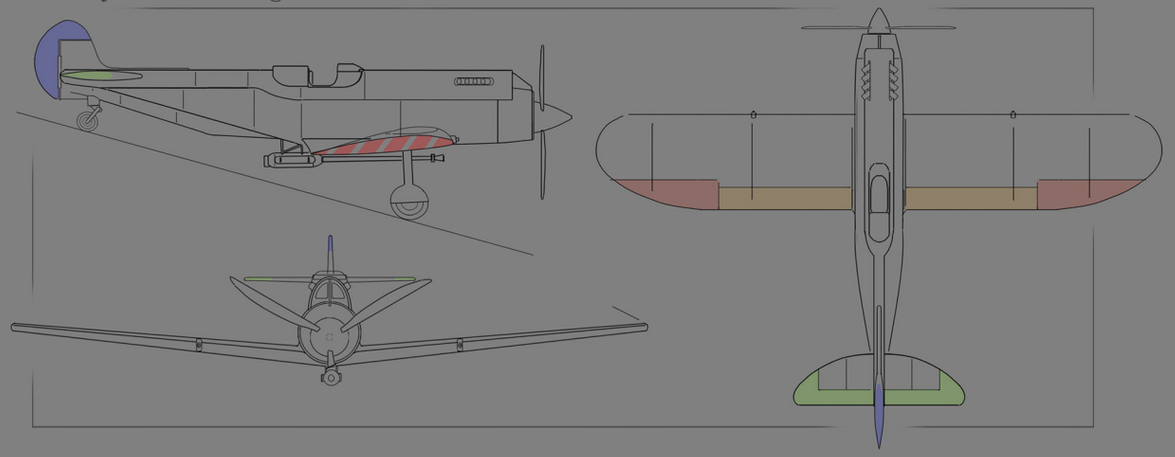

Fighter design is a passion of mine, and I have been waiting to create a sleek plane with an under-slung weapon pod. - Julian

## Warden Fighter

Designed for the Airborne CG reveal trailer, the script called for a Warden fighter.

For the full update, we wanted both factions to have one powerful looking fighter to sell a rivalry in visual design, and really capture the imagery of ace pilots dogfighting.

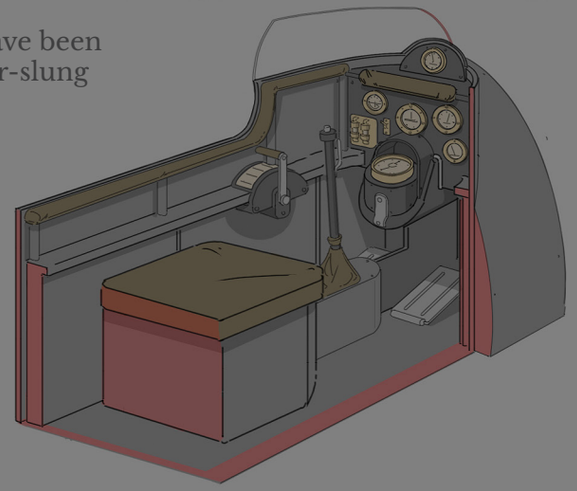

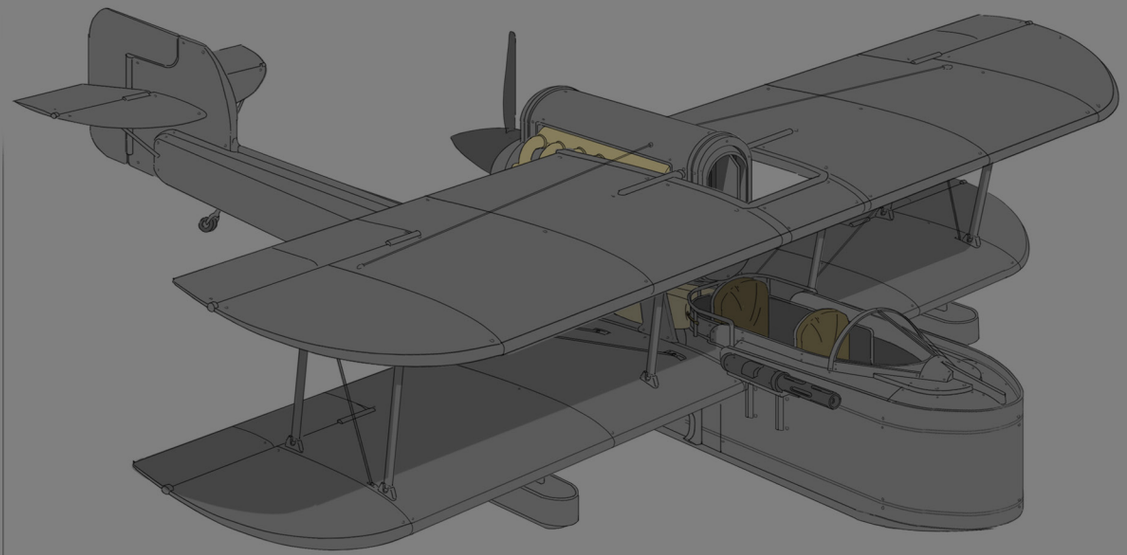

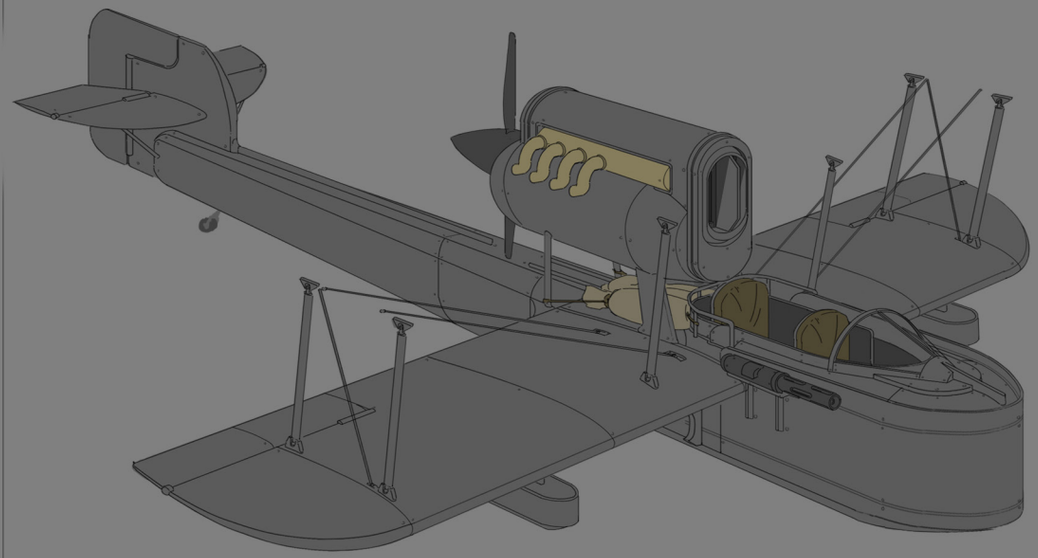

*Luminary Mk. IV Herald*

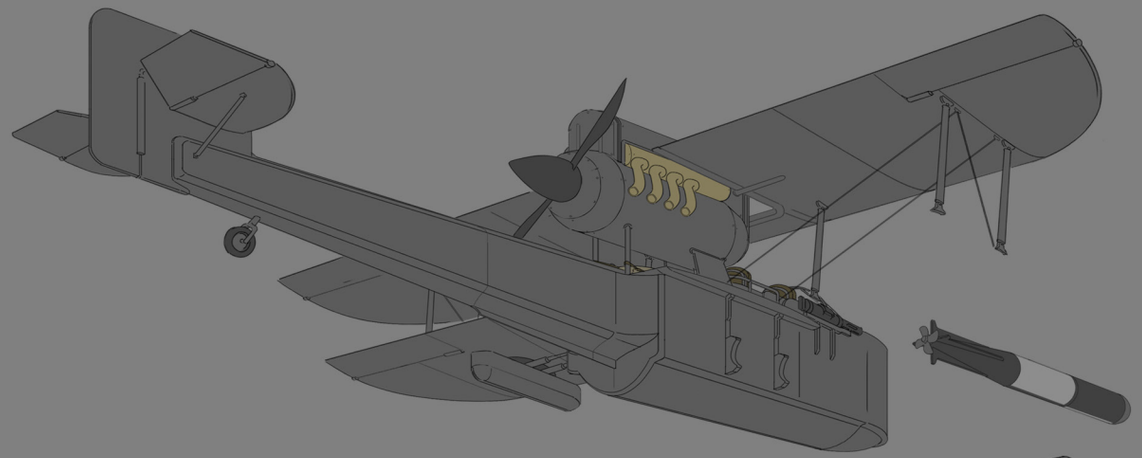

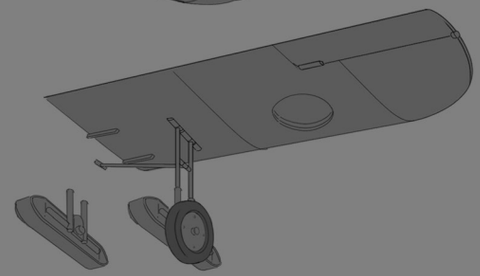

The Warden Scout Plane and both Warden and Colonial Fighters were favorites to design.
- Julian

## Warden Scout plane

Early on when developing theming ideas for the update, it was decided we would put in the time to support landing seaplanes on water.

Visually the task was open ended, the only requirement was that the scout plane had to look weaker than the fighters. Between the concept artists, a few rules were developed for the factions. Two of the Warden rules were: don't build engines into the wings, and lean into more biplanes.

Throughout the entire development of the game, Wardens vehicles have always looked older, and the idea to have the Warden's first plane technically be a flying boat was a fun one.

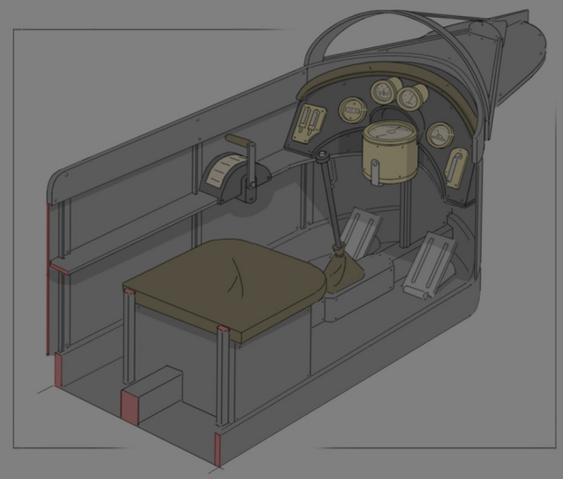

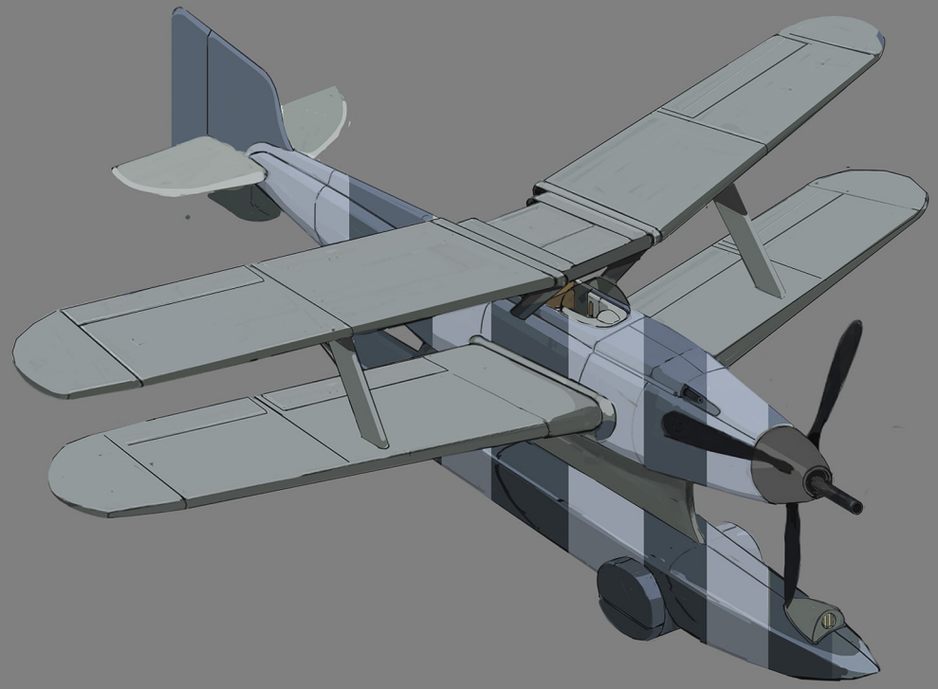

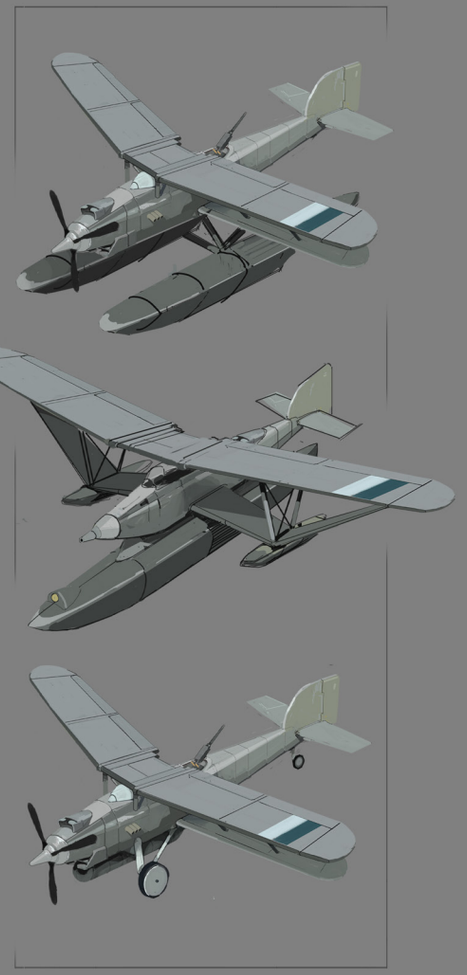

*Tulka I1.9 White Raven*

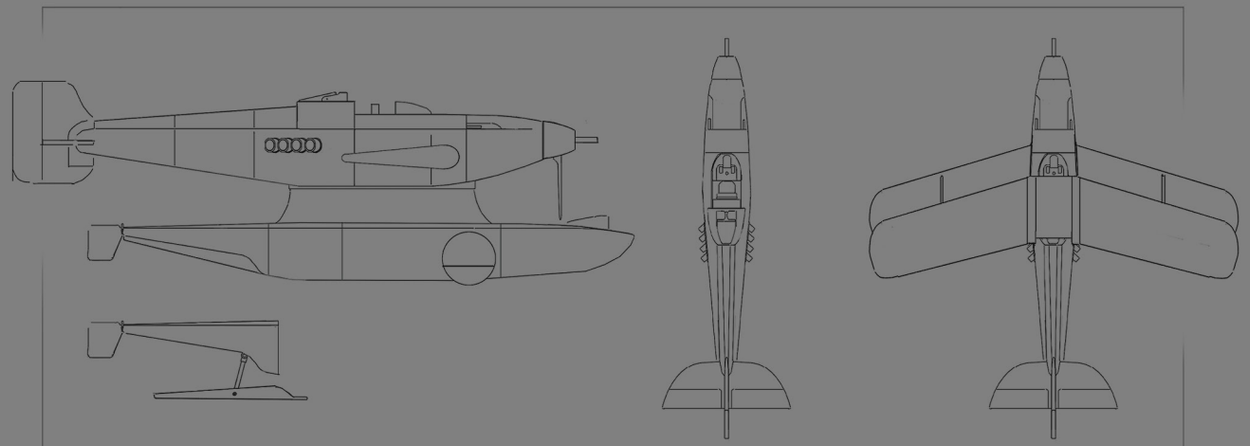

## Warden Sea Fighter

There was a choice to add a pontoon to the existing Warden Fighter but we chose to design a custom made sea fighter. The theme was a unique plane that had been purpose built for the Warden Navy. Luke was tasked with making a small compact fighter meant to look good on the carrier catapults. We nicknamed this plane ‘The Dart’ to aid the design of it. The paint scheme is intentionally garish to sell the story that it’s not part of the Airforce, and is connected to the ships of the Navy.

A wonderful, striking design.

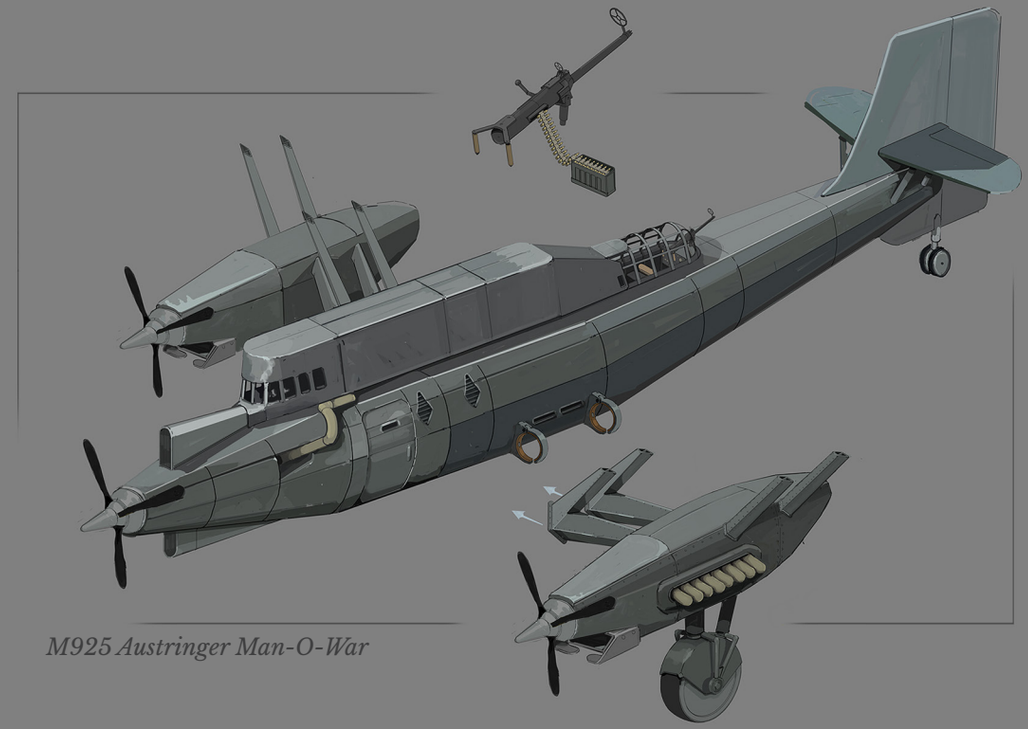

*M925 Austringer Man-O-War*

## Torbpedo Bomber

Early in development of the planes, there was a choice as to which side got the torpedo bomber, and which the dive bomber. It actually flipped a few times. The Colonial aircraft carrier was meant for fighter sized craft. The Torpedo Bomber was too large to fit.

Luke's favorite plane of the update, the three propeller configuration was based off of Italian torpedo bombers, where the orientation added stability during flight. For us, it added a recognizable top down silhouette. A theme had grown that Warden planes were going to look like a motley crew of pre-war civilian designs pressed into battle. Not intended as official lore, Luke envisioned this as a transport or mail carrier in a time of calm in Caoiva.

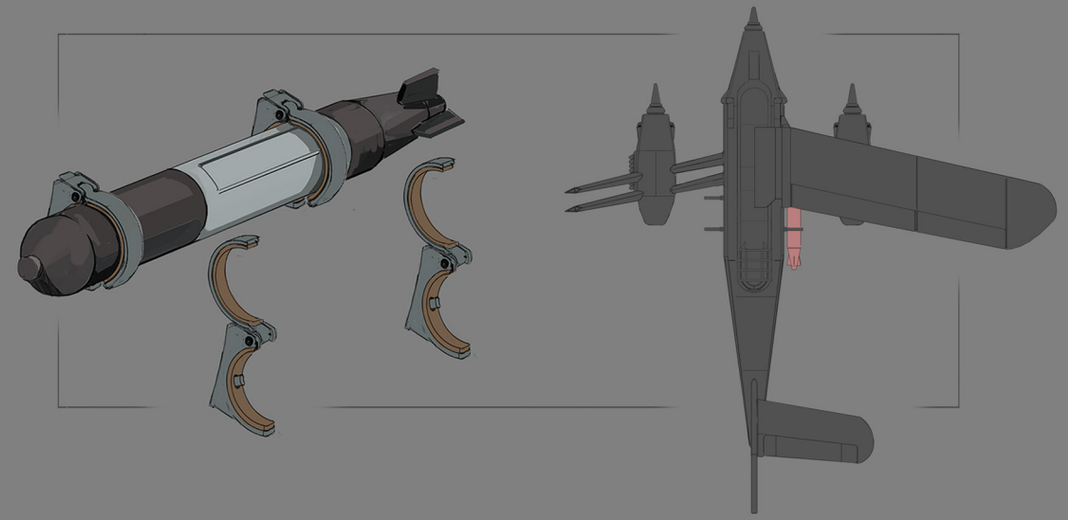

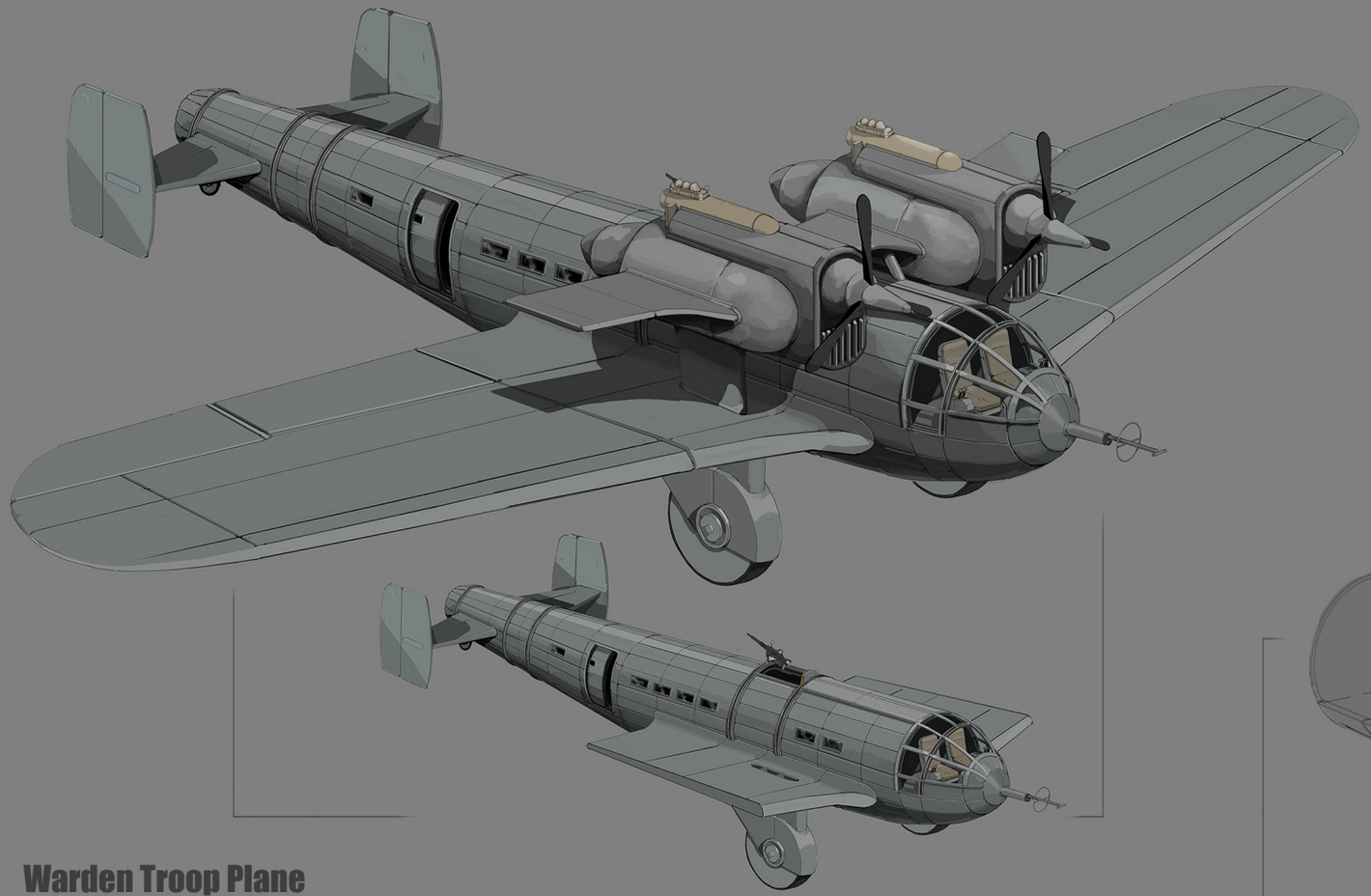



*Rinnspeir Mk. I Zealot*

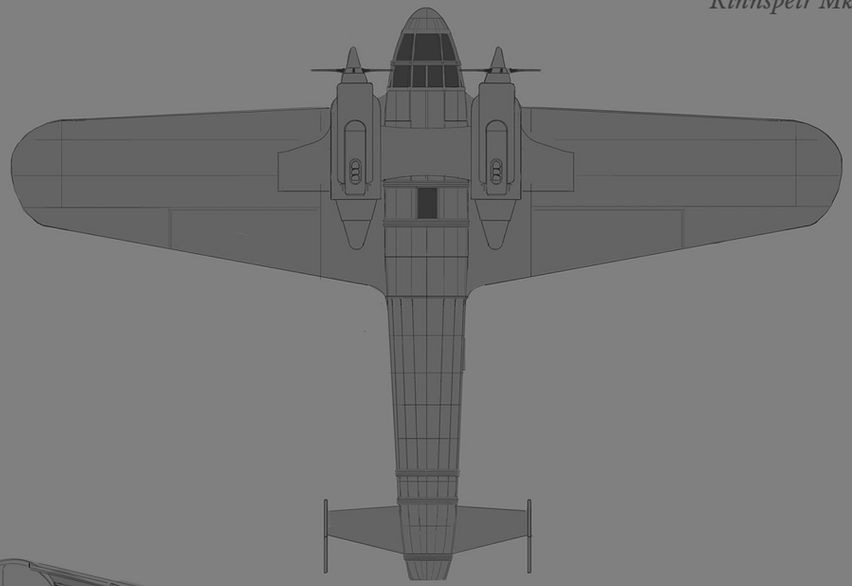

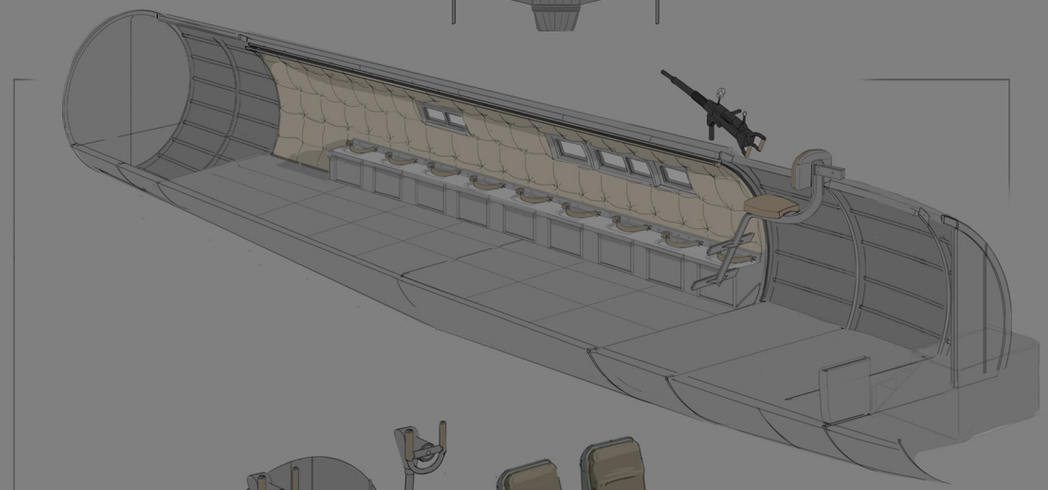

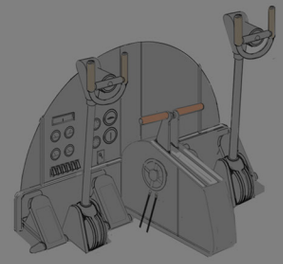

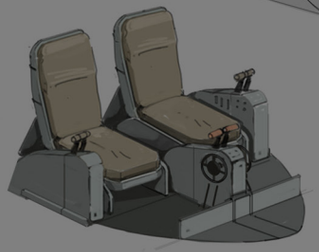

## Warden Troop Plane

Too early in the development for the official lore, Luke envisioned a Civilian transport or cargo plane which had then been converted for use as a tool for paratroopers. The major visual goal for the Wardens was to keep the engines off the wings and to lean into more biplane ideas. This was a simple visual guideline to give the two factions their own identity.

The engine orientation is actually used on real planes and adds extra lift, used on planes that need to operate on shorter runways. It's not commonly seen because of the obvious downside of making maintenance much harder. This was perfect for the overengineered aesthetic of Warden vehicles. The finishing touch was the mini top wing, adding a little hint of biplane thinking going into the faction.

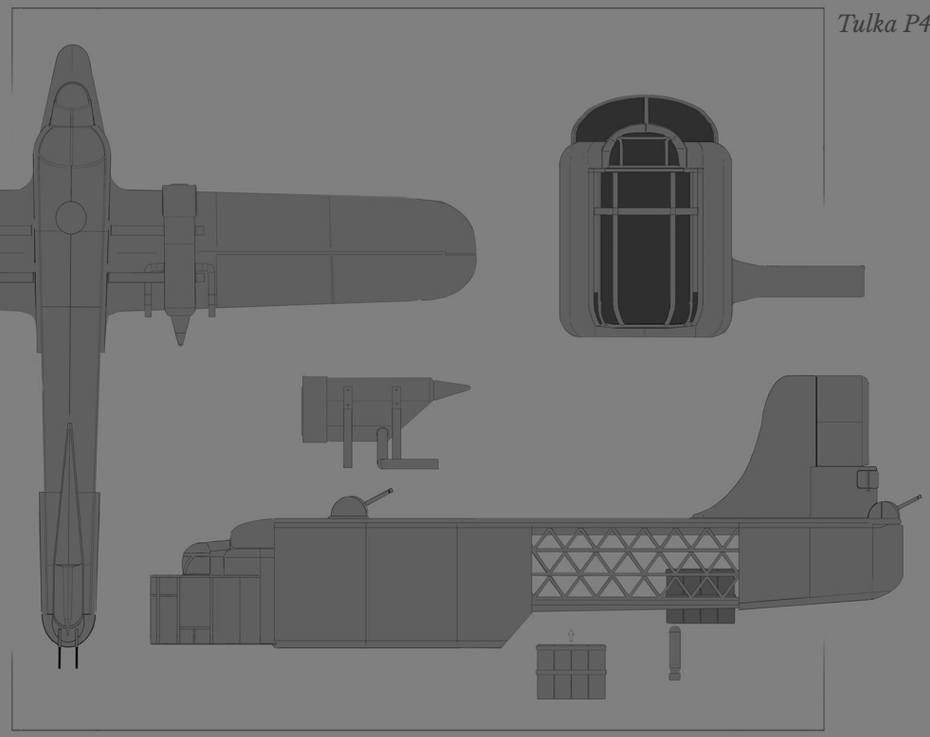

*Tulka P4 Welkinrive*

## Warden Light Bomber

Since the very beginning of the development for Airborne, there has been a pitch to explore a look of World War 1 biplanes made out of World War 2 materials. This was a thought experiment on how to create something that looked ‘interwar’, but uniquely Foxhole. The Warden bomber is exactly that, using the layout of a biplane bomber without the top wing, and constructed of metals. The raised engines of the biplane bombers actually inspired the idea for all Warden planes to not have their engines built into the wings. The exposed bomb bay was Luke’s greatest design addition, as it gave the plane a feeling that it was stripped down to lose weight to carry more bombs.

The combination of ideas fit in with the motley crew theme for the faction. The lore picked up on this, and the Air Force became a combined effort of all remaining Warden territories pitching in for the war effort. The Air Force needs to draw on all remaining planes it has access to.

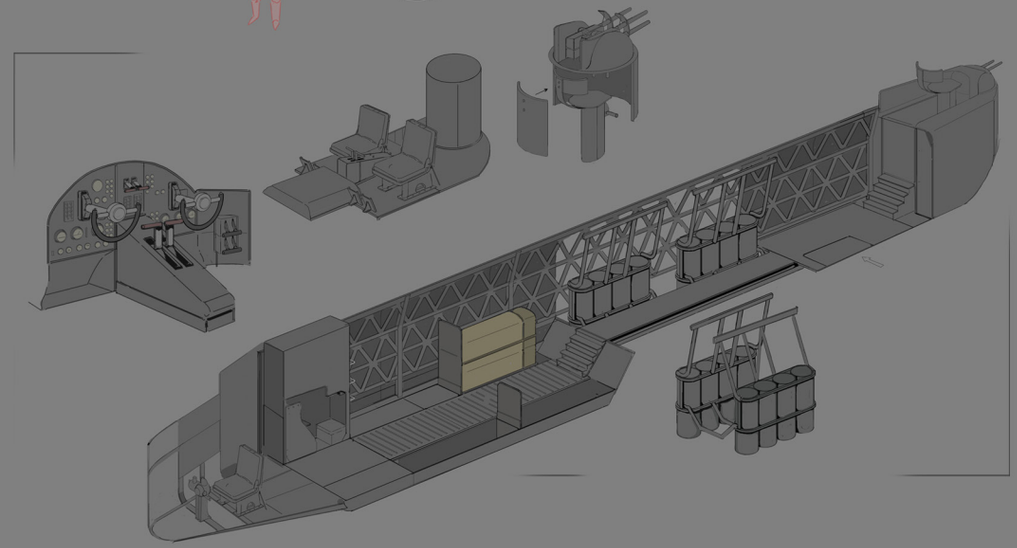

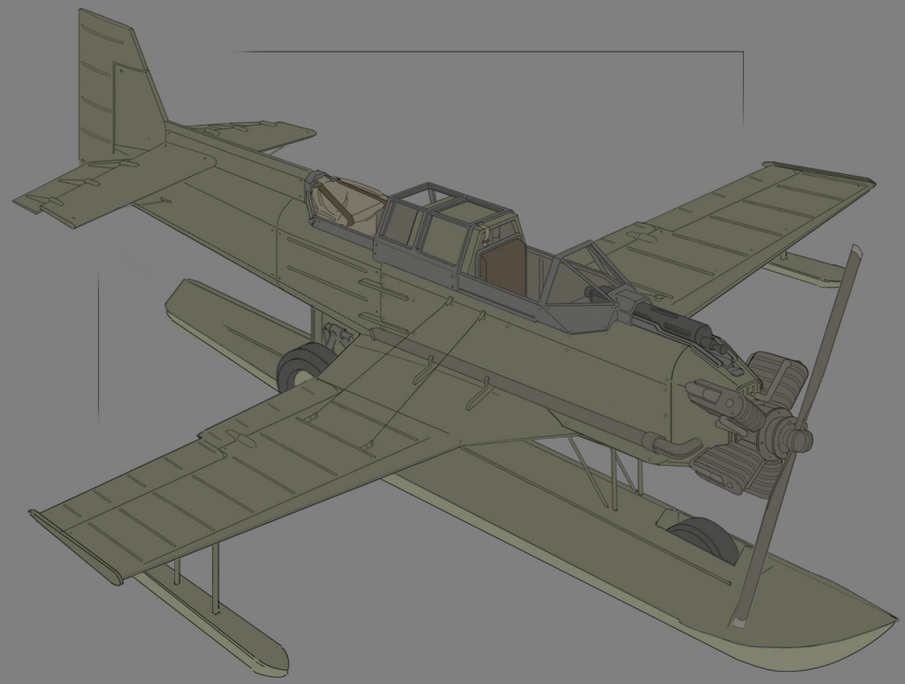

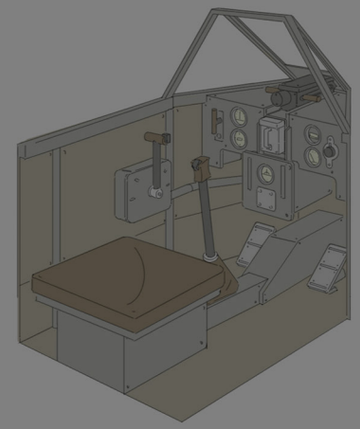

*A51 Venti Daedalus*

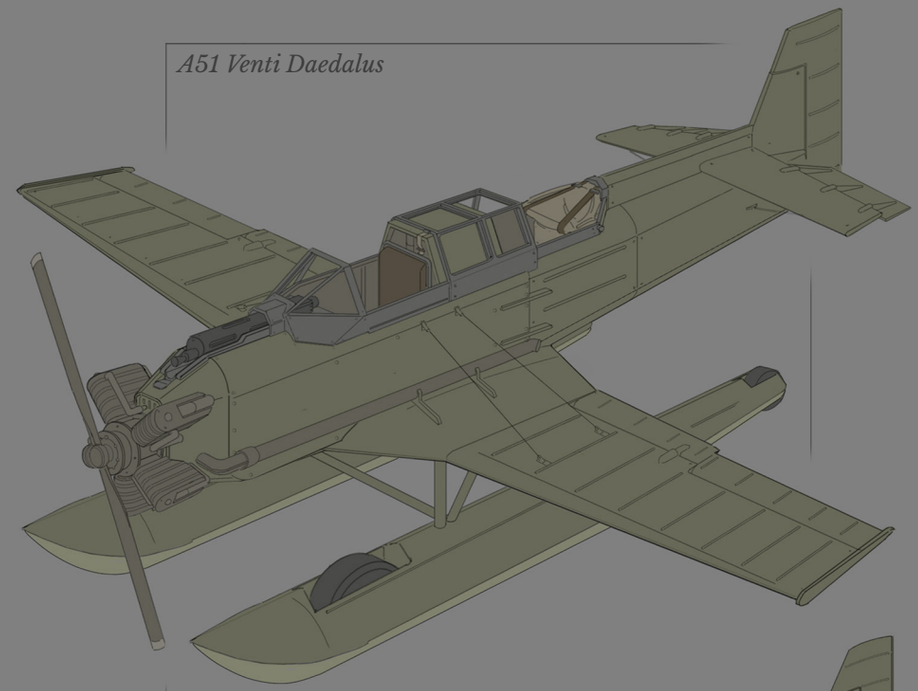

## Colonial Scout Plane

The Scout planes were actually late additions to the update from the game designers. The idea given to us was to design a few weaker looking planes that were accessible to solo or smaller groups of players.

It was debated if a weapon should be included at all. The deciding factor was the idea that the plane was a training tool, and all aspects of the larger planes needed to be included in that training.

The design was changed from one pontoon to two very close to release, when the new boats were added, and the planes played a key role in combatting them. The Colonial scout plane's bomb was chosen to train for the dive bombers later. Same for the mini torpedos on the Warden scout plane.

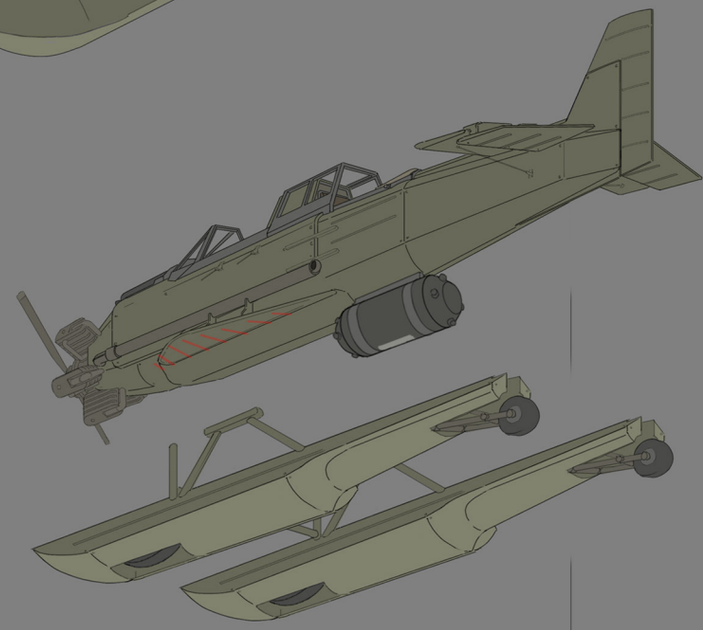

*Mergo-4 Myrmidon*

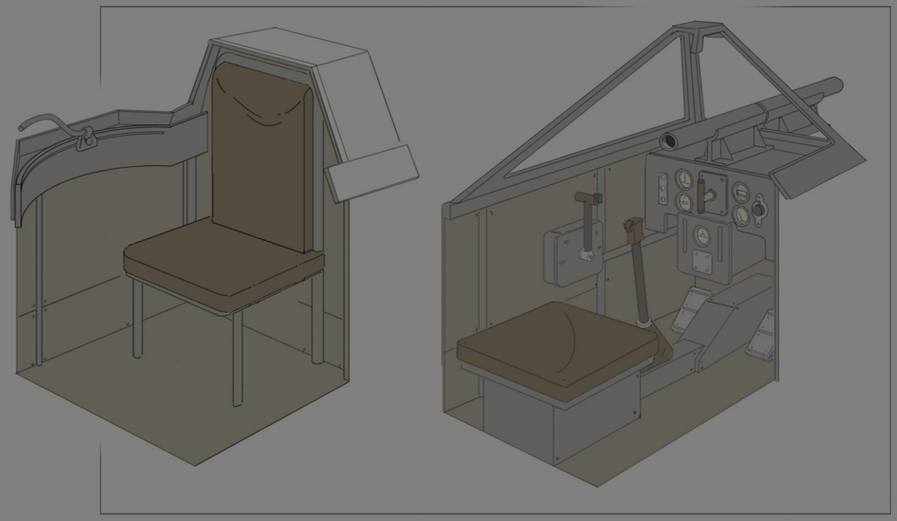

## Colonial Dive Bomber

Like the Wardens biplane influences, a major visual theme for the Colonials was to lean into twin boom aircraft. The choice behind the twin booms was that it would be instantly distinct from the top down.

With that said, the goal of the dive bomber was to actually make it look visually under powered to make it look expendable. Before the official lore, the idea was that the dive bomber's airframe would have started as a fighter, then repurposed when it underperformed.

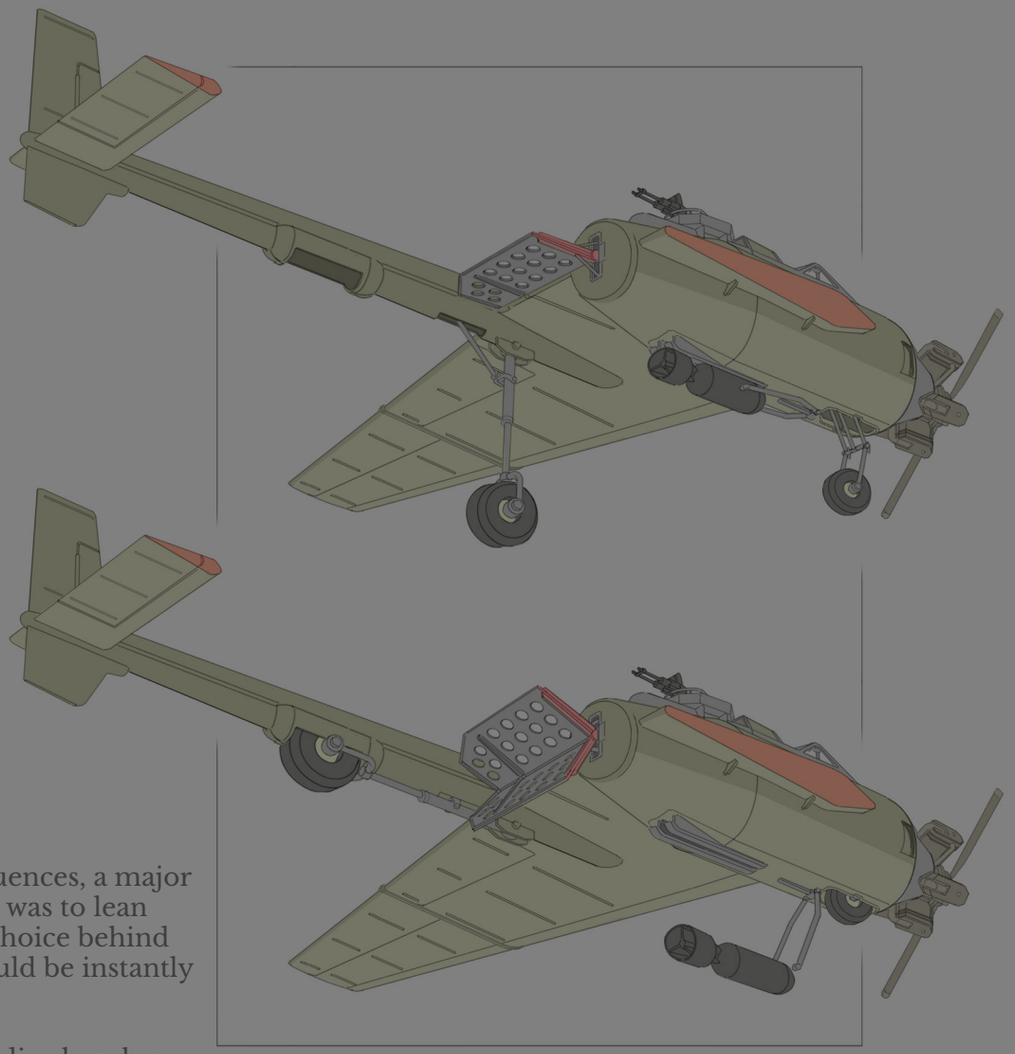

The idea to add the air break between the booms was a fun one when exploring how to make an original dive bomber design that would read well from the top down. - Julian

*Toxot-902 Blind Silver*

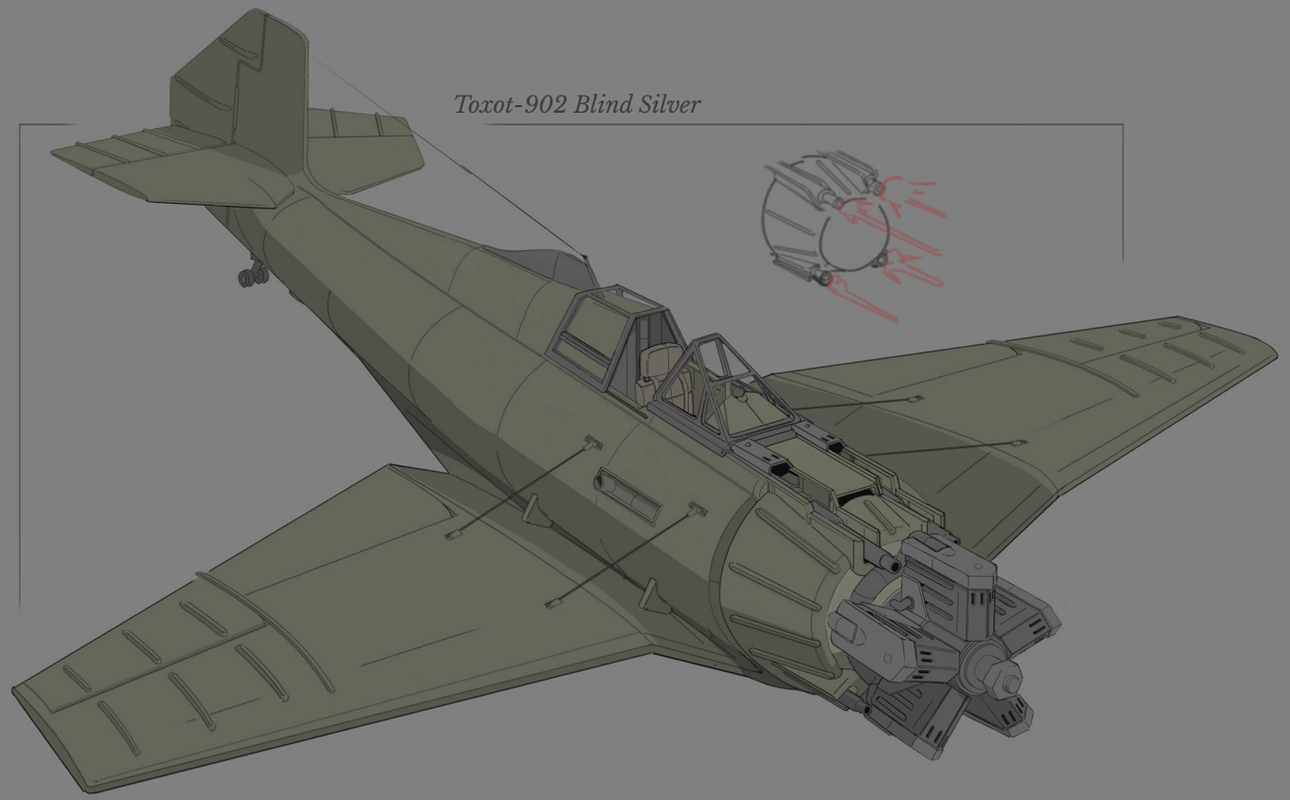

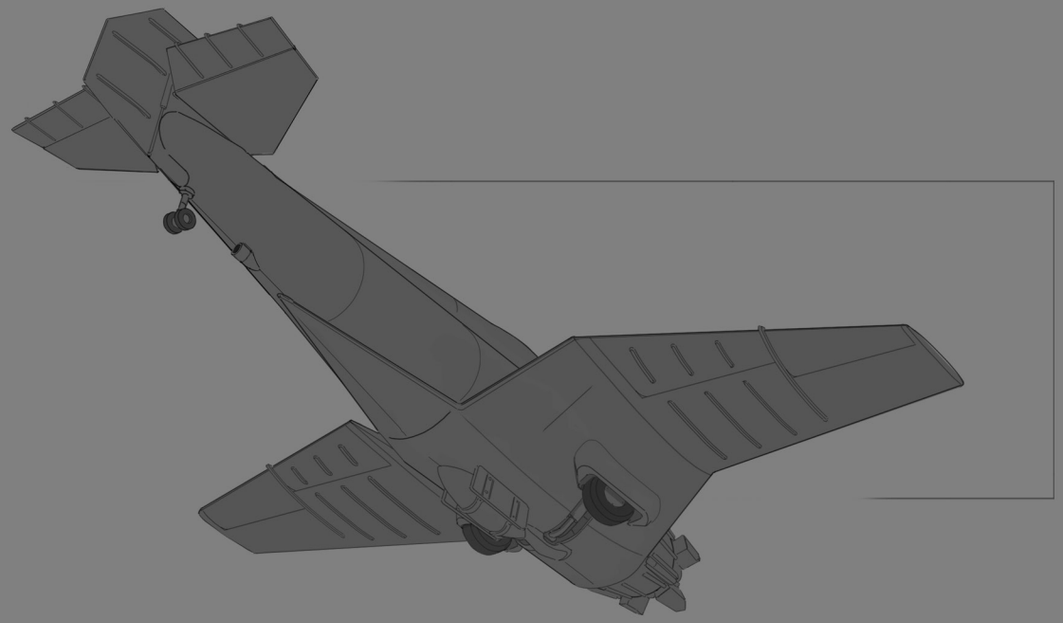

## Colonial Fighter

If Colonial vehicles are pickup trucks and utility vehicles, then Colonial aircraft are muscle cars. Exposed radial engines would give that impression of power. These were the first ideas that came to mind when designing the Warden fighter for the trailer. The two fighter planes were thought about as a pair when it was finally time to start work on the Airborne update. The two fighters needed to inspire each other.

During the time of the initial concepts, the Colonial fighter designs changed hands between artists. Throughout the design process, we wanted it to look mean, like a predator.The silhouette for birds of prey and specifically raptors were an inspiration. The wing design reinforced the prominence of the engine and four machine guns, or two double guns sets were wrapped around it.

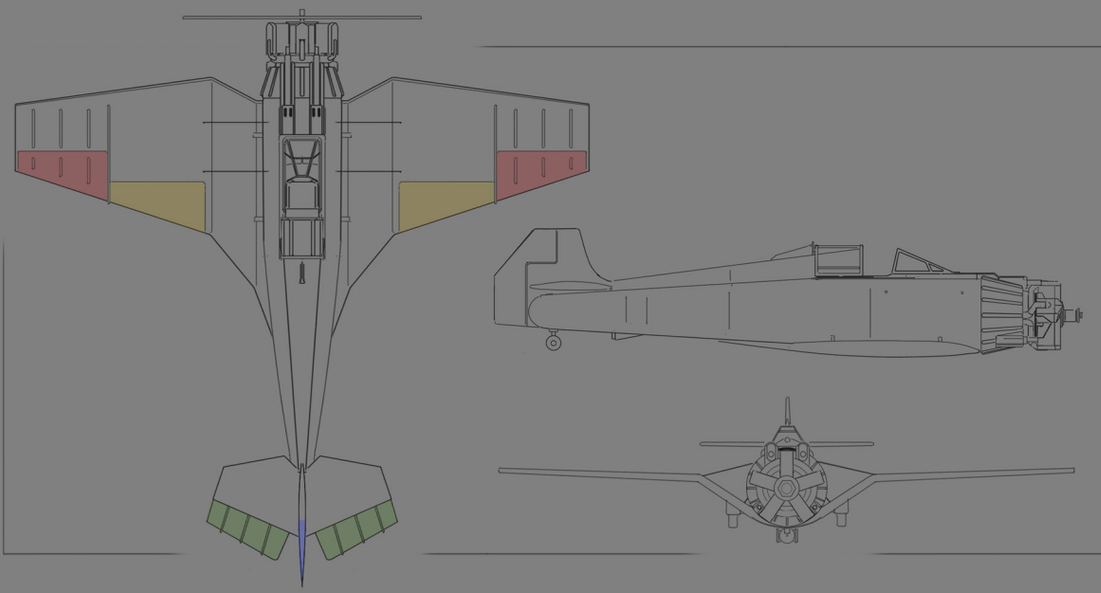

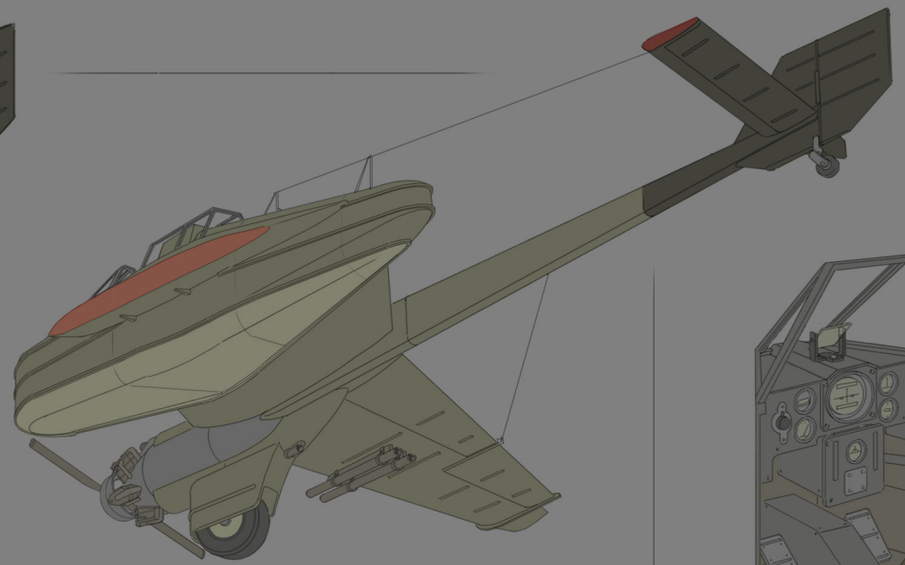

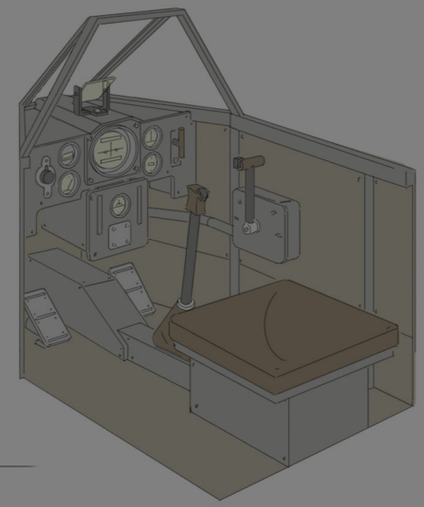

## Unused design

This design came much later in production, and was an experiment for a ground attack fighter that would be too big to land on the aircraft carrier. The themed necessity of having the planes capable of landing on the aircraft carriers meant that this design was not seriously considered at the time, but it was a fun exploration of the visual themes of exposed engines and twin booms.

The need for a ground attack fighter at first seems redundant with the dive bomber, but it's a consideration for the future. At the time this was drawn up, the rosters for both factions' first planes had already been determined by game design.

It is shown here as an example of how the initial idea might heavily change as the role and needs of the factions become clearer in the live game. The armament, crew size and key features are all malleable throughout production.

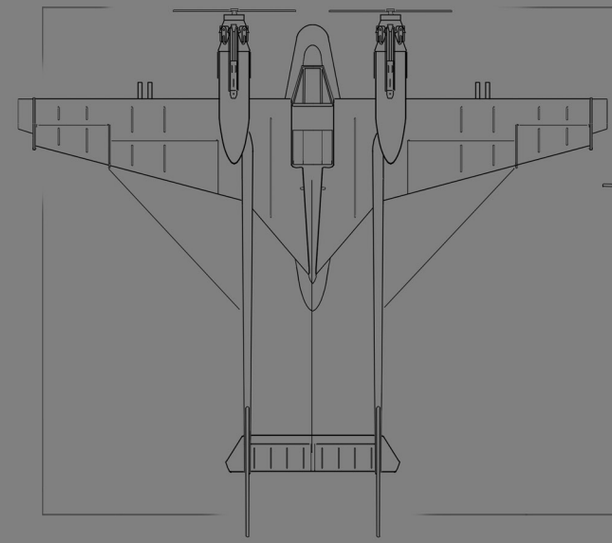

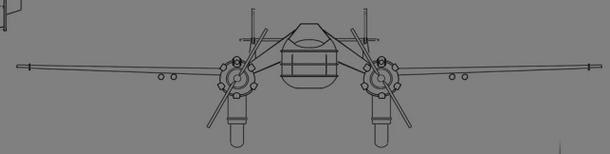

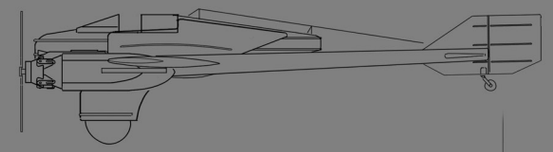

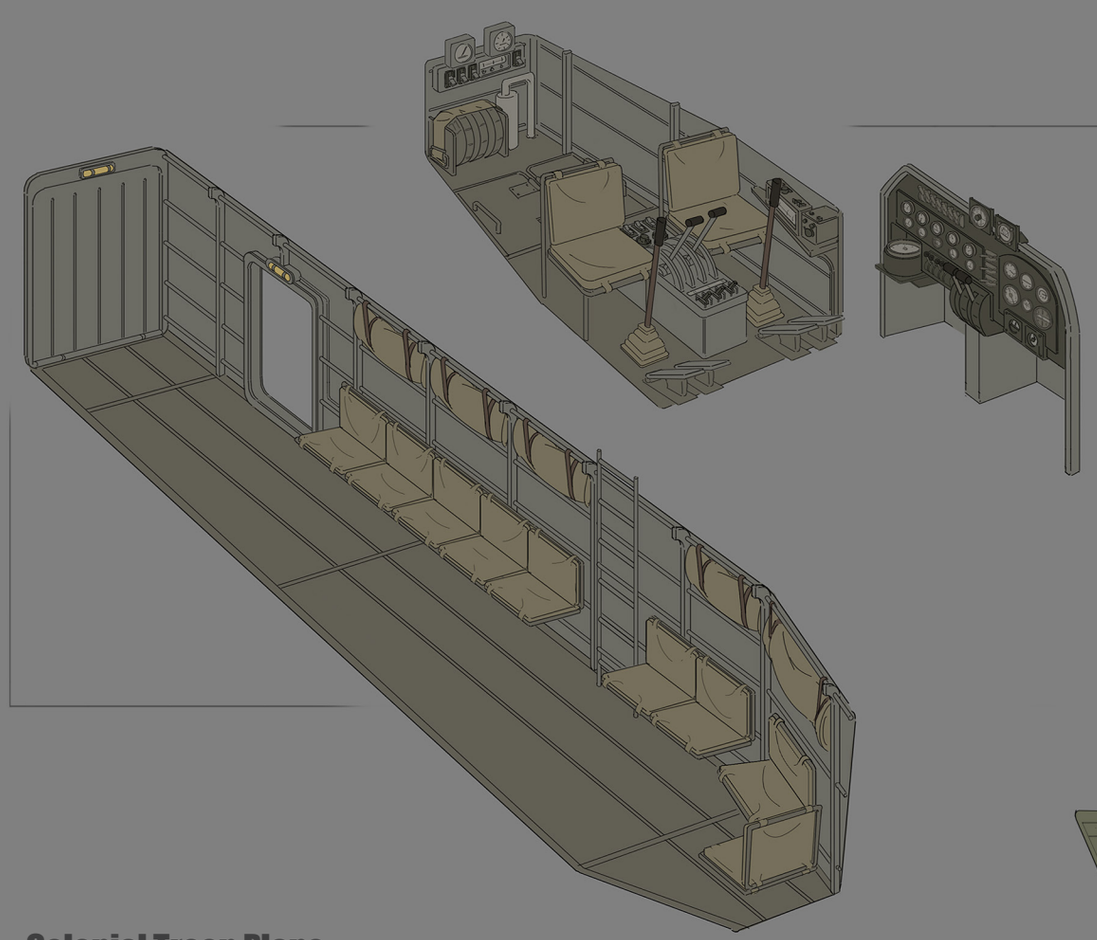

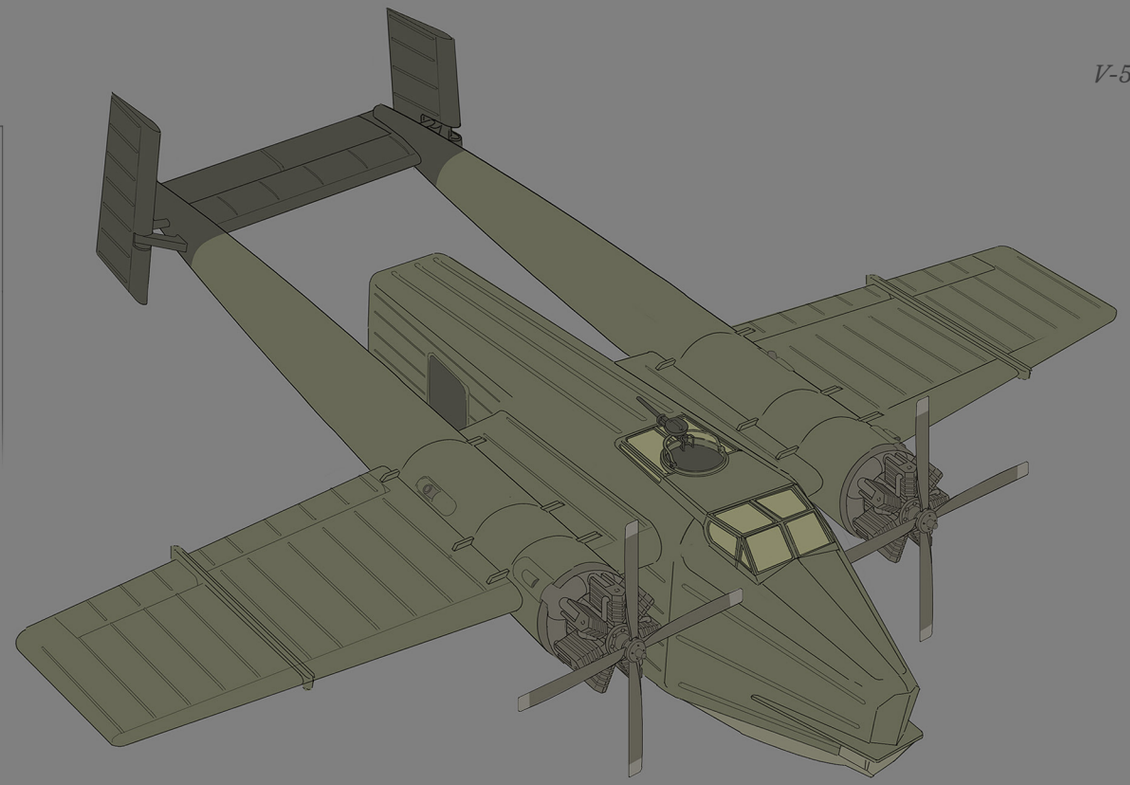

*V-5b Pegasus*

## Colonial Troop Plane

The troop plane was also a design for the CG trailer. The trailer called for a final shot to tease that paratroopers would be coming to the game. Paratroop raids were one of the other great visions from the beginning. The ability to roleplay with your teammates an air drop, and disrupt enemy lines was something the game designers have wanted to see in Foxhole for years, even before we thought planes were possible in game.

The faction theme of twin boom design started with this plane. Colonial vehicles have usually leaned towards what players might expect to see in a World War 2 movie, but this design was chosen to give the airforce its own personality, while staying in the correct era of time.

*V-1 Tzykalia*

## Colonial Bomber

The large aircrafts were tasked to Luke. While designed for the trailer, there were also plans to have walkable interiors on the bombers, and full concepts were drawn up.

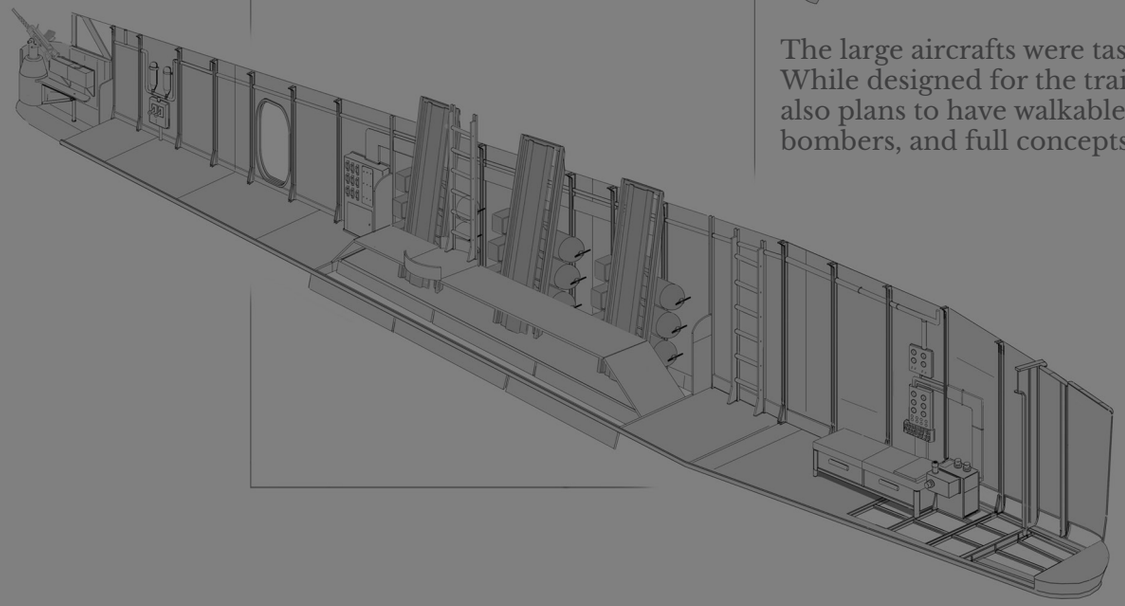

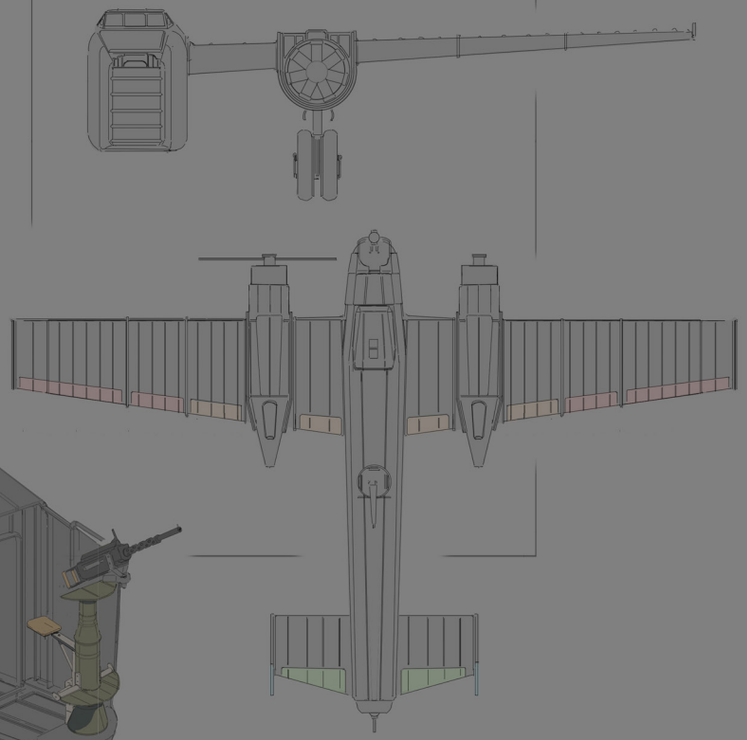

Visible skeletal ribbing and exposed gunners informed the look and age reference of the Colonial designs.

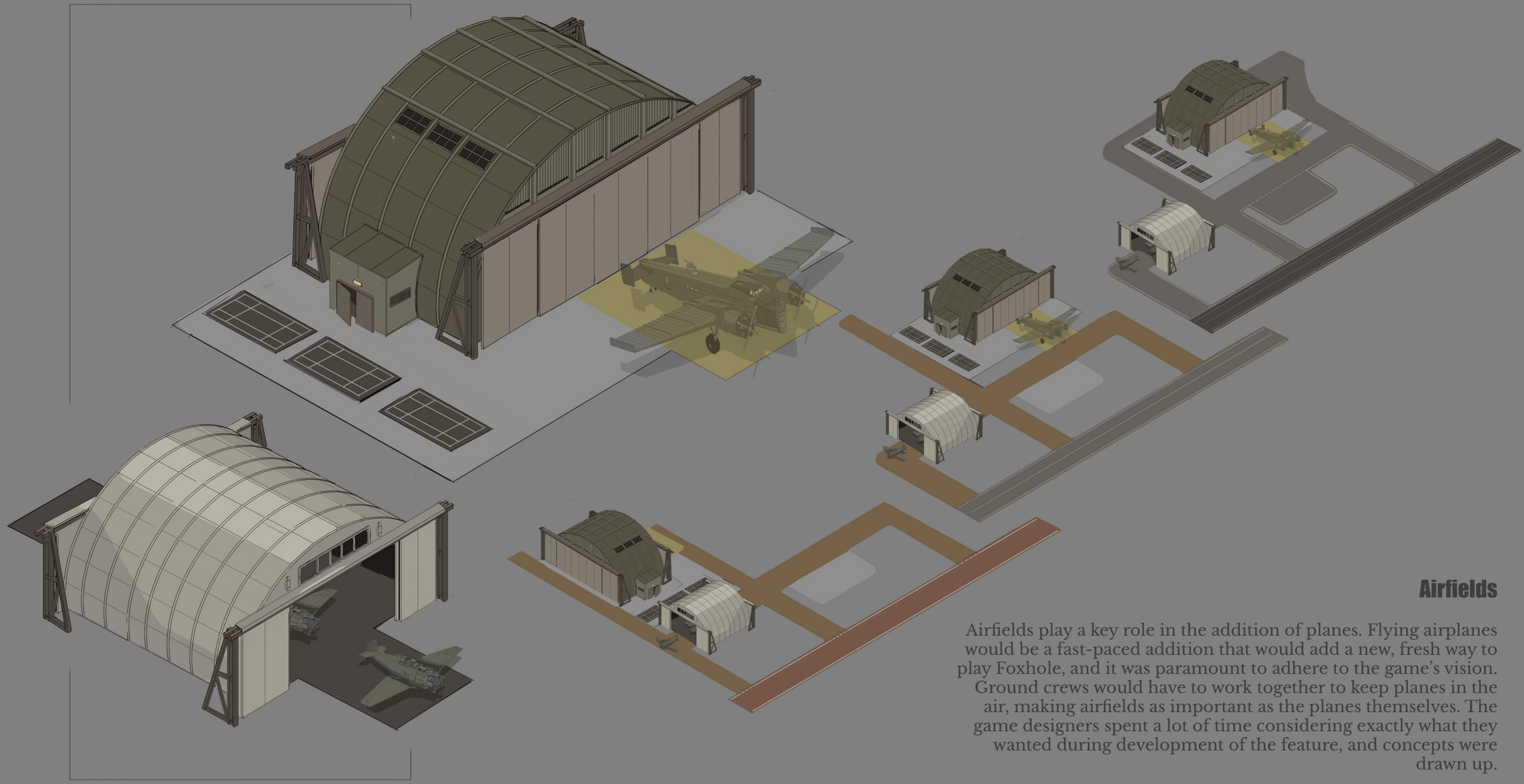

## Airfields

Airfields play a key role in the addition of planes. Flying airplanes would be a fast-paced addition that would add a new, fresh way to play Foxhole, and it was paramount to adhere to the game's vision. Ground crews would have to work together to keep planes in the air, making airfields as important as the planes themselves. The game designers spent a lot of time considering exactly what they wanted during development of the feature, and concepts were drawn up.

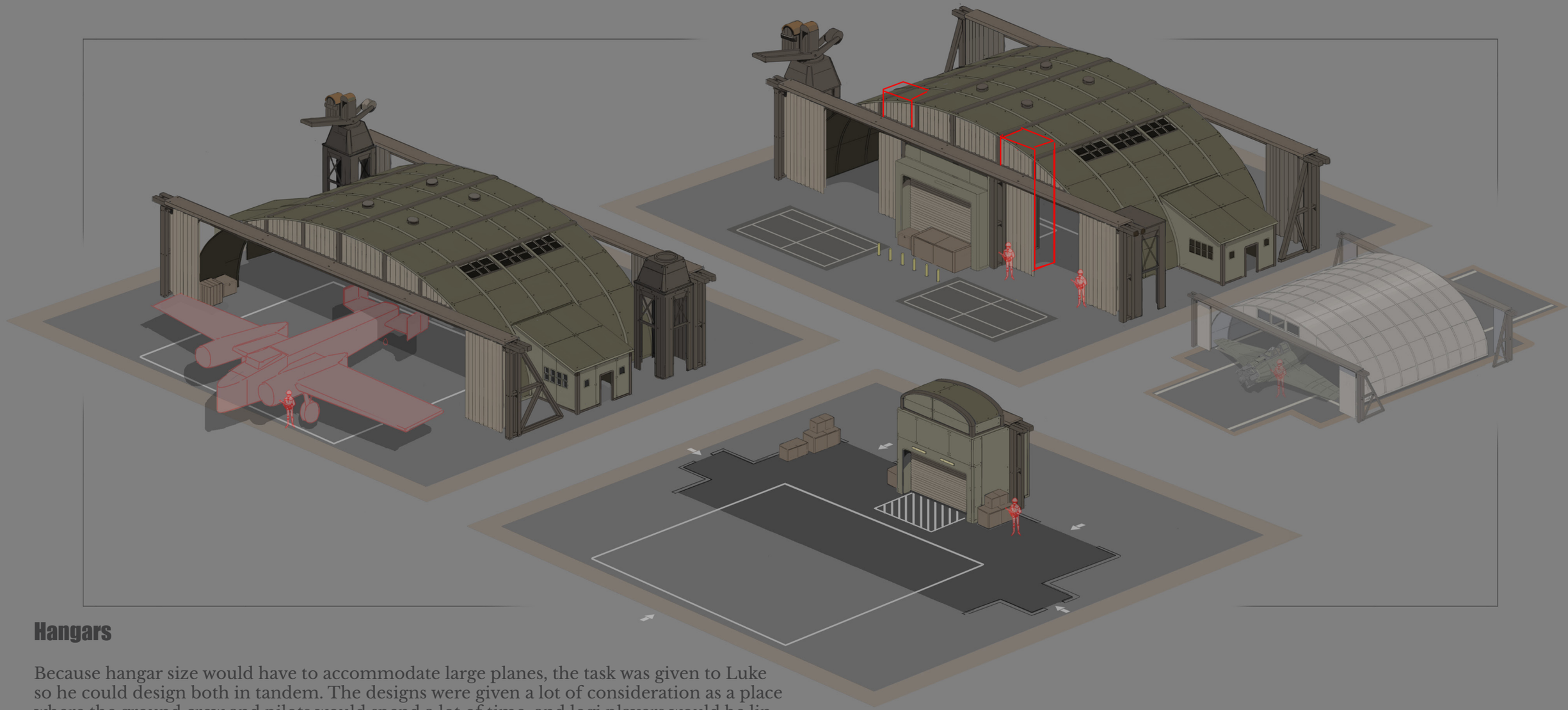

## Hangars

Because hangar size would have to accommodate large planes, the task was given to Luke so he could design both in tandem. The designs were given a lot of consideration as a place where the ground crew and pilots would spend a lot of time, and logi players would be lining up to drop off plane parts, materials, and fuel. The hangers and airfields would interact with all other game systems developed for the back lines so far.

Similar to the dry docks, their massive size meant that the level designers had to consider their placement while designing the new maps.

## Storytelling

Foxhole was never meant to be a vehicle for narrative storytelling. Our goal was to build a complex massively multiplayer game inspired by technology and tactics used in the early 20th century. It was never a goal to build a world that could be spun out into many different mediums.

The first lore “note” we put into the world was a very quick collaboration with Mark. I wanted to explore ways to inject bits of character into what would eventually become Deadlands. My initial goal was to find some way to show the human cost of war. Mark quickly implemented a couple of tools, including map names, so players would feel more of a transition between subregions.

Since we never had any ambitions to do direct narrative storytelling, the entire story is told in an epistolary style. The core tenets for our approach to narrative in Foxhole are that if we laid out the events, it should feel at home in a history book, and engaging with the world’s history would always be an addition to the primary gameplay experience.

For players who decide to invest in the lore, I felt a responsibility to layer in as rich an experience as possible, given our constraints. I laid out a plan to put flavour text wherever we could fit it, which meant hiding information in names and basic descriptions such that piecing together Foxhole’s lore became a metagame unto itself.

Players had to become historians. And like historians, nothing is neatly compiled. Propaganda is not decoded. There aren’t name tags pointing to who did what.

I’m still shocked and humbled that there’s such fervour over the world that we’ve built together at Siege Camp, and that this small part I’m lucky enough to be trusted with has had an impact on anyone. It’s a real joy observing intrepid Foxhole historians piece together things I never thought anyone would notice.

If you’ve invested in Foxhole’s world, I promise we’re only just beginning.

And thank you. -Matt

The portrait of Callahan is a really interesting image, because it was part of the bunker interior assets that never got added into the game. However, somehow it got spread around the community, and has become oddly iconic, despite not actually appearing anywhere in-game.

Kind of ironically, the photo of Thea Maro and her Swords got hidden somewhere in the game via a small scavenger hunt. We actually used these pieces as a prototype when designing the lore item “interaction” system. I have pretty fond memories of working through the details of this alongside the artists and programmers who contributed.

"Raka Concept Map"

"The Breach"

"Early Morning Rounds"

“Legacy”

"Saoirse and Cara's Smoke Break"

"Velian Railyard Workers"

“H-5 Hatchet”

“Devitt Mk. III”

“Sharpening Skills”

“Upper Heartlands”

"Industry"

"Joyous Reprieve"

SIEGE CAMP

Copyright © 2026 Siege Camp. All rights reserved.
No part of this publication may be reproduced or
transmitted in any form without prior written permission.